Feb. 13, 1940. E. W. GRIFFITH 2,190,117

INFLATION SIGNALING DEVICE

Filed March 1, 1939 2 Sheets-Sheet 1

Fig. 1.

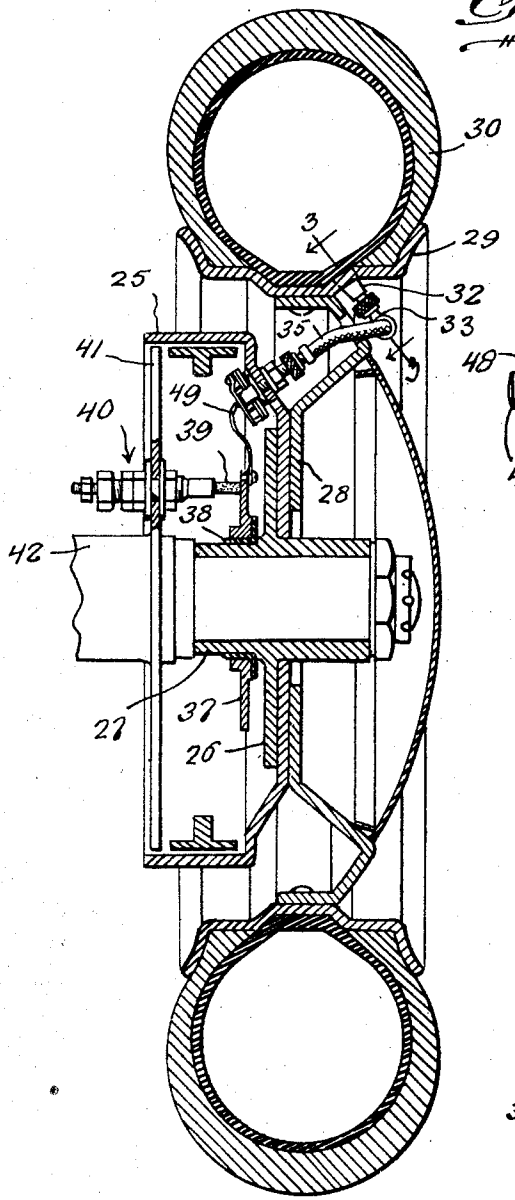

Fig. 2.

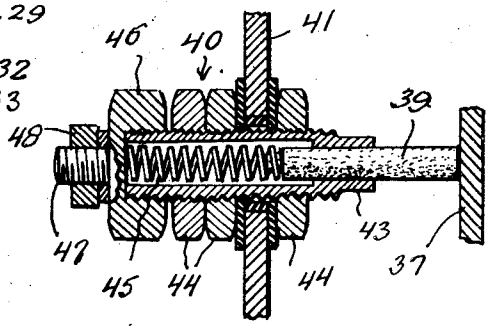

Fig. 3.

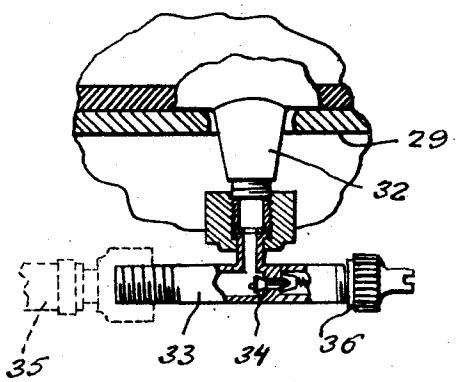

Inventor
Earl W. Griffith,

By J. Stanley Burch
Attorney

Feb. 13, 1940. E. W. GRIFFITH 2,190,117

INFLATION SIGNALING DEVICE

Filed March 1, 1939 2 Sheets-Sheet 2

Fig. 4.

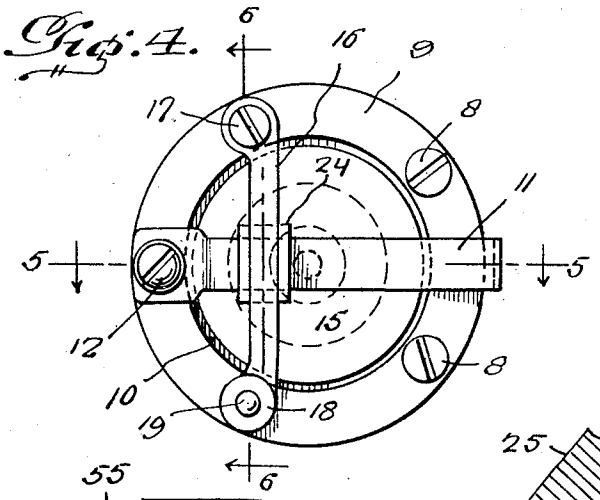

Fig. 6.

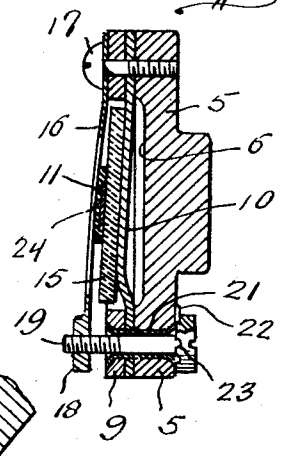

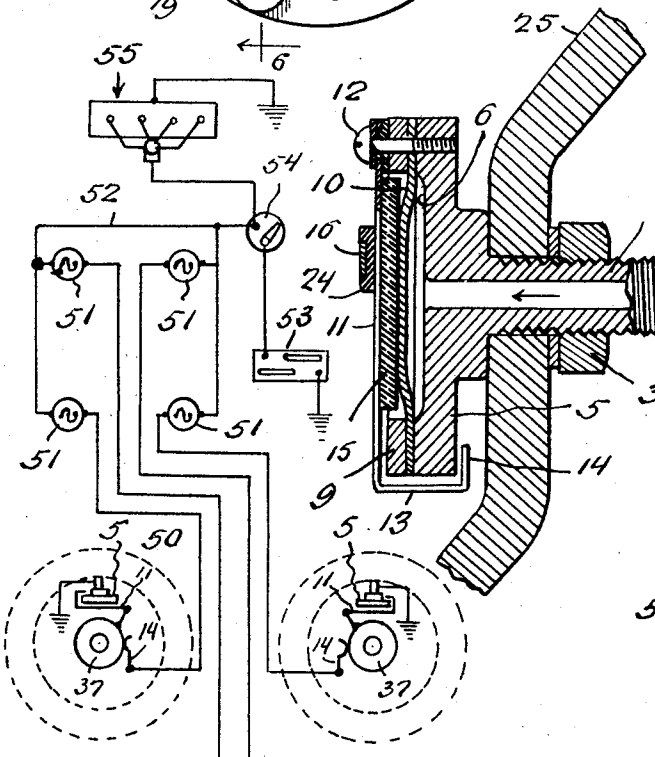

Fig. 5.

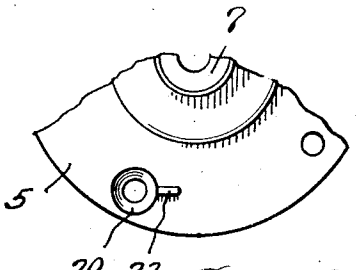

Fig. 7.

Fig. 8.

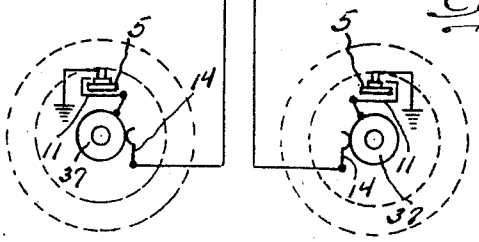

Inventor

Earl W. Griffith,

By J. Stanley Burch

Attorney

Patented Feb. 13, 1940 2,190,117

UNITED STATES PATENT OFFICE

2,190,117

INFLATION SIGNALING DEVICE

Earl W. Griffith, Dalhart, Tex.

Application March 1, 1939, Serial No. 259,266

4 Claims. (Cl. 200—58)

This invention relates to inflation signaling devices, and has more particular reference to certain improvements in the construction disclosed in my co-pending application Serial Number 177,814, filed December 2, 1937.

The primary object of the present invention is to provide, in a signaling device of the kind noted above, an improved pressure-operated switch for controlling the signaling circuit of each tire. More particularly, the present invention contemplates the provision of such a pressure-operated switch which will not be unfavorably affected by the momentum of the wheel when traveling at a high rate of speed, thereby overcoming a serious objection found with a pressure-operated switch utilizing a Bourdon tube as disclosed in my above-mentioned prior application.

A further object is to provide an improved pressure-operated switch of the above kind, wherein simple and efficient means is provided for regulating the tension of the movable contact so that the switch may be adjusted to close the signaling circuit at any desired predetermined pressure.

Another object of the present invention is to provide a pressure-operated switch of the above kind which is extremely simple and durable in construction, as well as inexpensive to manufacture, efficient in use, and adapted for ready and convenient installation.

Still another object of the present invention is to provide a novel arrangement of contact ring and means for readily mounting the same on and insulating the same from the hub of the wheel.

Another object is to provide a novel arrangement, mounting and relationship of contact rings, pressure switch, and means for connecting the pressure-operated switch with the inflation valve of the tire.

With the above general objects in view, the invention consists in the novel form, combination and arrangement of parts hereinafter more fully described, shown in the accompanying drawings and claimed.

In the drawings:

Figure 1 is a detail transverse section of a wheel equipped with certain elements forming part of the present signaling device.

Figure 2 is an enlarged detail section clearly illustrating the construction and mounting of the brush which engages the contact ring forming part of the construction shown in Figure 1.

Figure 3 is an enlarged detail view, partly in section, illustrating the fitting employed in the connection between the tire inflation valve and one end of the conduit which connects with the pressure-operated switch.

Figure 4 is an end elevation of the pressure-operated switch, drawn on an enlarged scale.

Figure 5 is a longitudinal section taken on the plane of line 5—5 of Figure 4.

Figure 6 is a section on line 6—6 of Figure 4.

Figure 7 is a fragmentary plan view of the body of the pressure-operated switch, looking toward the inner or rear face of said body; and

Figure 8 is a diagrammatic view illustrating the circuits of a system in which the present signaling device is associated with each of the four wheels of the motor vehicle.

Referring in detail to the drawings, the present signaling device includes a pressure-operated switch or circuit closer consisting of a disk-like body 5 having a central circuit recess 6 in the outer face thereof and provided with a central rearwardly projecting hollow stem 7 adapted for connection with the tire whose state of inflation is to be indicated. Bolted as at 8 to the margin of the body 5 is a clamping ring 9, and a flexible elastic diaphragm 10 is clamped between the margin of the body 5 and the ring 9 so as to provide an air pressure chamber, between the diaphragm and the recessed portion 6 of the body 5, communicating with the passage through the stem 7. A movable contact arm 11 consisting of an elongated strip of spring metal is bolted at one end to the ring 9 as at 12, and this contact extends diametrically of the diaphragm 10 and has a free end portion of angular form extending across the edges of the ring 9 and body 5 as at 13 and inwardly behind the adjacent portion of body 5 as at 14. Loosely fitted within the ring 9 is a disk 15 of insulating material which is disposed between the contact arm 11 and diaphragm 10 so as to position said contact arm entirely out of engagement with ring 9 and body 5 when the proper pressure exists within the tire connected with the stem 7, as shown clearly in Figure 5. The desired tension is placed upon the contact arm 11 by means of a tension device consisting of a strip 16 of spring metal extending across the contact arm 11 near its attached end and anchored at one end to the ring 9 by bolting or the like as at 17. The other end of tensioning strip 16 is provided with a boss 18 into which is adjustably threaded a screw 19 extended through the opposite side of body 5, diaphragm 10 and ring 9 as shown clearly in Figure 6. The holes in the body 5 and ring 9 which receive the screw 19 are countersunk as at 20 to receive the

flanged ends of a binding sleeve 21 positioned through these holes. Obviously, by rotating the screw 19, the tension of strip 16 may be adjusted so as to correspondingly tension the contact arm 11, and suitable means is provided for maintaining the adjustment of screw 19, such as a rib 22 on the body 5 adjacent to the opening of the latter which receives screw 19, as shown in Figure 7, adapted to engage in any desired one of a plurality of radial grooves 23 provided in the inner face of the head of screw 19 as indicated clearly in Figure 6. In other words, this is simply a ratchet arrangement which prevents the screw 19 from accidentally turning as commonly practiced in many arts for analogous purposes, although permitting intentional or manual turning and adjustment of said screw 19. The tensioning strip 16 is insulated from the contact arm 11 by means of a thin block of insulating material 24 having a groove in one face receiving the contact arm 11 as shown in Figure 6, and another groove in the other face receiving the tensioning strip 16 as shown in Figure 5.

It will be apparent that when the pressure in the tire connected with the stem 7 of this pressure-operated switch becomes greater than required, the contact arm 11 will move outwardly to engage its terminal end 14 with the body 5 so that a signaling circuit may be completed to warn the driver of this fact. Likewise, should the pressure in the tire be lowered beyond that required for proper inflation of the tire, the contact arm 11 may engage the ring 9 and thereby close the signaling circuit to serve as a warning to the driver. It will be particularly apparent that the pressure-operated switch is of very rugged or durable and compact construction and is not sensitive or readily unfavorably affected by centrifugal force. Accordingly, the switch will operate efficiently and will not be materially affected by the momentum of the wheel when traveling at a high rate of speed.

The pressure-operated switch is mounted upon the radial wall of and within a brake drum 25 attached to a radial flange 26 of a wheel hub 27 carrying an ordinary demountable wheel body 28 having a rim 29 on which the tire 30 is mounted. As shown clearly in Figure 5, the stem 7 of the pressure-operated switch extends through the radial wall of brake drum 25 and the body 5 abuts the inner face of such wall and is clamped thereagainst by means of a nut 31 threaded on the stem 7 and against the outer face of said wall. In this way, the pressure-operated switch is readily rigidly fastened in place with the body thereof within the brake drum 25, and with the stem 7 of the pressure-operated switch extended toward the inflation valve 32 of the tire 30. In order to connect the stem 7 with the inflation valve 32, the latter is provided with an attached three-way fitting 33 as shown more clearly in Figure 3, one branch of said fitting being screwed on the valve 32, another branch being coupled to the stem 7 by means of a conduit 35, and the remaining branch being adapted for connection with an inflation hose and provided with a check valve 34 and a removable cover or cap 36. The ends of conduit 35, which may consist of a short piece of flexible hose, are provided with quick detachable couplings which may be readily engaged with or detached from the stem 7 on the fitting 32 so as to permit ready demounting of the wheel body 28 with respect to the hub 27 and drum 25 as required in the art, the wheel body 28 being provided with an opening as shown in Figure 1 through which the conduit 35 extends. This provides for ready assembly or separation of parts whenever same is required for repairs or the like.

Mounted upon the hub 27 within the drum 25 is a contact ring 37 rotatable with the wheel and insulated from the hub 27 by means of a bushing 38 of insulating material. This bushing has a flange on one end to prevent any possible contact of the ring 37 with the hub flange 26 when fitted on the hub 27 as shown. The ring 37 has a driving fit on the bushing 38 so that rotation of contact ring 37 with hub 27 is insured when the parts are assembled. A brush 39 is constantly pressed against the contact ring 37 and carried by a holder 40 mounted in an opening of the closure disk 41 of the brake drum 25. This closure disk is stationary and suitably fixed upon the axle or axle housing 42 as is well known in the art. As shown clearly in Figure 2, the brush holder 40 preferably consists of a tube 43 having a plurality of nuts 44 threaded thereon, the closure disk 41 being tightly clamped between adjacent ones of the nuts 44 so as to mount the holder in place. The brush 39 slidably fits in one end of tube 43 and is yieldingly urged outwardly into contact with ring 37 by means of a helical compression spring 45 arranged within the tube 43 between the inner end of brush 39 and a cap 46 threaded on the inner end of tube 43. This cap has a projecting threaded stem 47 on which is fitted a nut 48, thus providing a binding post to which one end of an electrical conductor may be attached to place the brush 39 in the signaling circuit. The contact ring 37 is electrically connected to contact arm 11 of the pressure-operated switch by means of a wire 49 whose ends may be respectively soldered to the outer face of contact ring 37 and to the contact arm 11.

Referring to the diagram of Figure 8, the brush 14 of each wheel may be connected by a wire 50 with one side of a lamp or other warning signal 51, the other side of said lamp or signal being connected by wire 52 with one side of a storage battery 53. The ignition switch 54 of the motor vehicle may be interposed in the wire 52 between the battery 53 and the lamp or signal 51. In this way, the signal circuit will be broken when the ignition circuit of the motor vehicle, generally indicated at 55, is broken, the signal circuit being closed when the ignition circuit is closed by switch 54.

It will be understood that each of the wheels of the vehicle is provided with a pressure-operated switch, contact ring, brush holder, and connection between the pressure-operated switch and the tire, as described. The brush 39 of each wheel may be connected with a separate lamp or signal 51 as shown, or all of the brushes may be connected to single lamp or signal depending upon whether or not an indication or warning is required with respect to each individual wheel.

In operation, the switch 54 is closed, and if the tires of all of the wheels are properly inflated, the contact 11 of the pressure-operated circuit closer will be disengaged from their associated parts 5 and 9, so that the signal circuits will be broken and the signals will be inoperative. However, should any one of the tires be over or under inflated, the contact 11 of the circuit closer associated with the wheel equipped with that tire will be engaged with either the body 5 or ring 9 so that the associated signal circuit will be closed and its signal 51 rendered operative. Thus, the driver will be warned of the under inflation or over inflation of the tire. By adjusting screw 19, the

tension of contact 11 may be properly regulated so that the circuit will not be closed unless the pressure in the tire exceeds or goes below the correct inflation pressure of the tire in question. Thus, the device may be installed upon wheels having tires requiring different pressures of inflation, by merely adjusting the tension of contact 11 instead of providing special pressure-operated switches for each individual installation. While the pressure-operated switch is well adapted for use in inflation signaling devices, it will be apparent that the same is adapted for general use in any apparatus or device requiring a switch operable by fluid under pressure.

It is believed that the construction and operation of the present invention, as well as the advantages thereof, will be readily understood and appreciated by those skilled in the art. It will also be appreciated that the invention is susceptible of many minor changes in details of construction without departing from the spirit and scope of the invention as claimed.

What I claim as new is:

1. In a tire inflation signaling device, a pressure-operated switch comprising a disk-like body having a central inlet stem provided with external threads, a nut threaded on said stem for clamping the switch to a support with the stem extending through an opening in the latter, a clamping ring bolted to the margin of said body, a flexible diaphragm having its margin clamped between said ring and said body and providing a chamber in communication with the bore of said stem, a resilient contact strip attached at one end to one side of said clamping ring and having its other end free and extending around the edges of said body and said clamping ring and then inwardly at the inner side of said body, an insulating disk fitted in said ring between said diaphragm and said contact strip, and means for adjusting the tension of said contact strip.

2. In a tire inflation signaling device, a pressure-operated switch comprising a disk-like body having a central inlet stem provided with external threads, a nut threaded on said stem for clamping the switch to a support with the stem extending through an opening in the latter, a clamping ring bolted to the margin of said body, a flexible diaphragm having its margin clamped between said ring and said body and providing a chamber in communication with the bore of said stem, a resilient contact strip attached at one end to one side of said clamping ring and having its other end free and extending around the edges of said body and said clamping ring and then inwardly at the inner side of said body, an insulating disk fitted in said ring between said diaphragm and said contact strip, a resilient tensioning strip extending across said contact strip and secured at one end to said clamping ring, and means for adjustably drawing the other end of said tensioning strip toward said clamping ring for regulating the tension of said contact strip.

3. In a tire inflation signaling device, a pressure-operated switch comprising a disk-like body having a central inlet stem provided with external threads, a nut threaded on said stem for clamping the switch to a support with the stem extending through an opening in the latter, a clamping ring bolted to the margin of said body, a flexible diaphragm having its margin clamped between said ring and said body and providing a chamber in communication with the bore of said stem, a resilient contact strip attached at one end to one side of said clamping ring and having its other end free and extending around the edges of said body and said clamping ring and then inwardly at the inner side of said body, an insulating disk fitted in said ring between said diaphragm and said contact strip, a resilient tensioning strip extending across said contact strip and secured at one end to said clamping ring, means for adjustably drawing the other end of said tensioning strip toward said clamping ring for regulating the tension of said contact strip, and a thin insulating block interposed between said contact strip and said tensioning strip, said insulating block having a groove in one face receiving the contact strip and a further groove in its other face receiving said tensioning strip.

4. A pressure-operated switch comprising a disk-like body having a central inlet stem, a clamping ring bolted to the margin of said body, a flexible diaphragm having its margin clamped between said ring and said body and providing a chamber in communication with the bore of said stem, a resilient contact strip attached at one end to one side of said clamping ring and having its other end free and extending around the edges of said body and said clamping ring and then inwardly at the inner side of said body, an insulating disk fitted in said ring between said diaphragm and said contact strip, and means for adjusting the tension of said contact strip.

EARL W. GRIFFITH.