United States Patent [19]

Murray

[11] **3,814,394**

[45] **June 4, 1974**

[54] **APPARATUS FOR ENCAPSULATING HOT GASES FROM HIGH STACKS**

[76] Inventor: **Michael F. Murray,** 189 Cedar Ave., Oroville, Calif. 95965

[22] Filed: **Nov. 17, 1971**

[21] Appl. No.: **199,789**

[52] **U.S. Cl.** ..... **261/83,** 46/6, 55/231, 98/58, 110/119, 110/184, 169/1 R, 239/602, 261/DIG. 9, 261/DIG. 26

[51] **Int. Cl.** **B01d 47/00**

[58] **Field of Search** ..... 55/1, 84, 87, 89, 90, 91, 55/220, 227, 229, 230, 231, 232, 233, 240, 242, 243; 261/84, 83, DIG. 9, DIG. 26, 94; 46/6, 7, 8; 110/119, 184; 239/1, 28, 14, 602; 98/58; 169/1 R

[56] **References Cited**

UNITED STATES PATENTS

1,958,383	5/1934	Naucler et al.	261/DIG. 26
2,234,385	3/1941	Ryner	261/113
2,736,988	3/1956	Fisher	46/7
2,767,967	10/1956	Hutchinson	261/113
3,065,797	11/1962	Barnes	261/DIG. 26
3,100,947	8/1963	Hellman	46/8
3,306,008	2/1967	Silverman	55/87 X
3,383,854	5/1968	White	55/DIG. 30
3,487,620	1/1970	Klein et al.	261/126 X
3,503,704	3/1970	Marks	55/138 UX
3,601,313	8/1971	OweBerg	55/107 X

FOREIGN PATENTS OR APPLICATIONS

1,337,379	8/1963	France	55/220

Primary Examiner—Dennis E. Talbert, Jr.
Attorney, Agent, or Firm—Clarence A. O'Brien; Harvey B. Jacobson

[57] **ABSTRACT**

Hot gases are encapsulated by creating a high draft by passing them up a high stack, subjecting hot gas leaving the stack to a bubble-forming medium, and entrapping the hot gas in bubbles formed by the hot gas impinging on the bubble-forming medium. The hot gas is subjected to a bubble-forming medium, such as latex, by a continuously rotated screen wheel having a screen defining a mesh for carrying the bubble-forming medium. A sponge impregnated with the bubble-forming medium and in direct contact with the screen wipes the screen for continuously applying the bubble-forming medium thereto.

14 Claims, 4 Drawing Figures

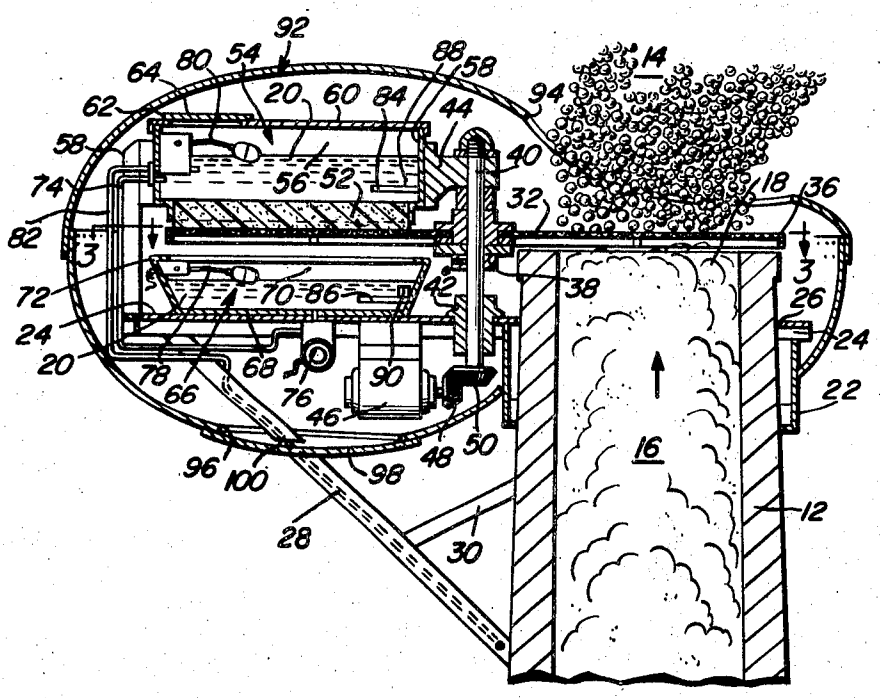

Fig. 1

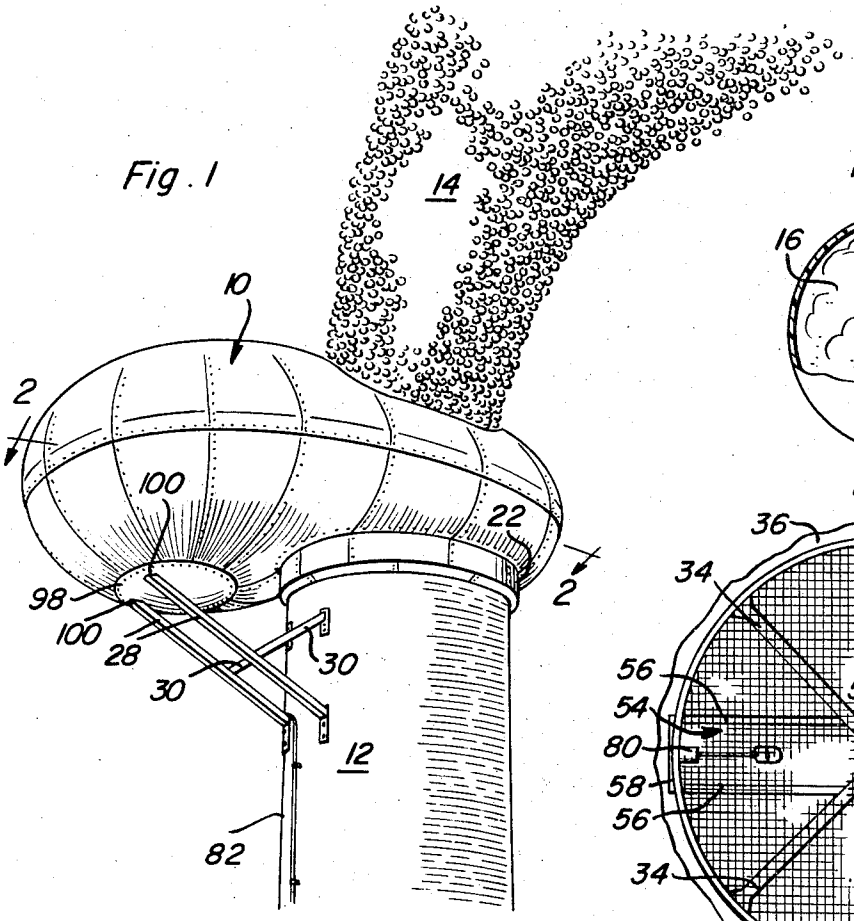

Fig. 4

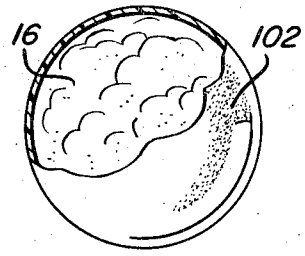

Fig. 3

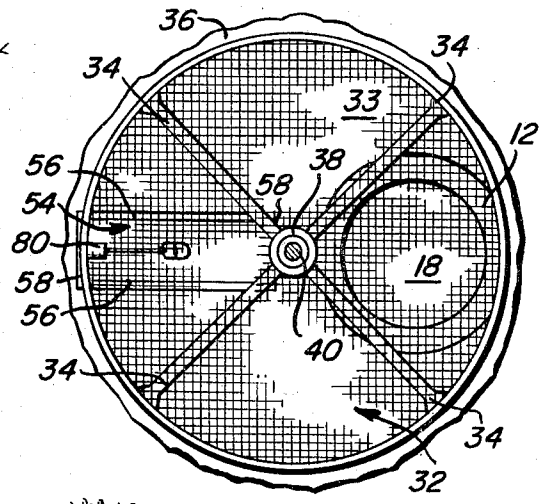

Fig. 2

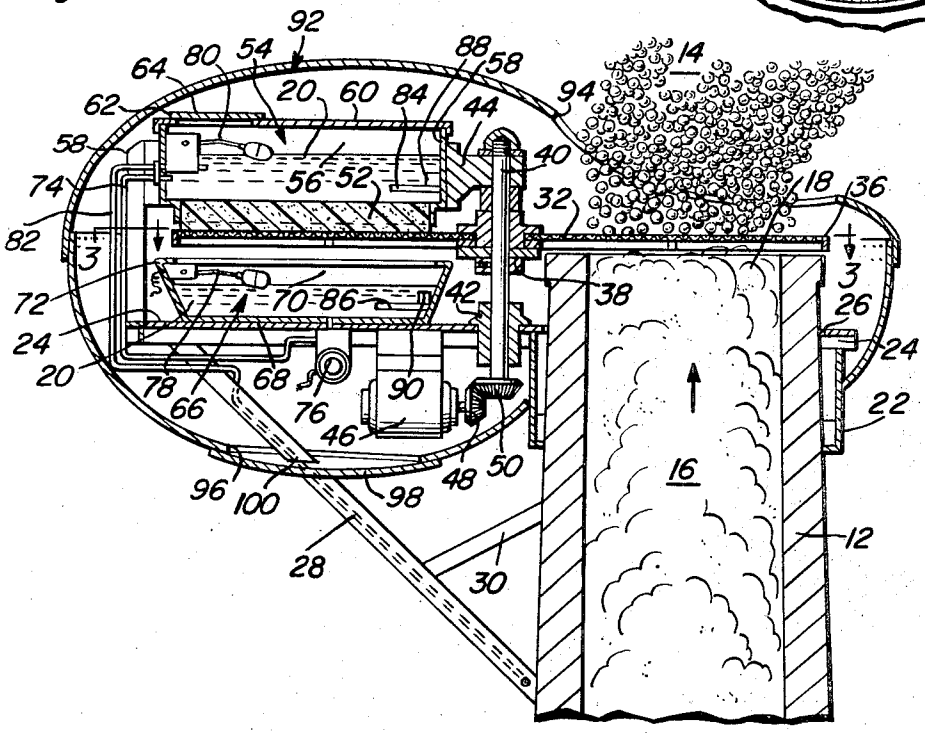

APPARATUS FOR ENCAPSULATING HOT GASES FROM HIGH STACKS

BACKGROUND OF THE INVENTION

1. Field of the Invention

This invention relates to an apparatus for reducing air pollution by encapsulating hot gas leaving a high stack. The hot gas remains encapsulated in a bubble until the bubble bursts to high altitude.

2. Description of the Prior Art

Many devices for separating particles from hot gases are known. One common approach is to employ static charges to attract ionized particles in a stream of hot gas. These electrical precipitators, however, involve much expensive equipment and high operating costs. Another approach is to attract the particles in a stream of hot gas by causing the particles to combine with a liquid, usually water. One device of this type is shown in, for example, U.S. Pat. No. 1,550,357, issued Aug. 18, 1925 to G. L. Hess. A soot eradicator described in this patent passes a stream of hot gas though one or more rotating screens covered with water. The particles in the stream of hot gas tend to adhere to the water, and are washed off the screen in a water bath which the rotation of the screen subsequently subjects the particles to. U.S. Pat. No. 3,389,971, issued June 25, 1968 to H. Alliger, describes a spray-type soot eliminator using ultrasonic vibrations to combine the particulate matter with a mist. U.S. Pat. No. 1,749,594, issued Mar. 4, 1930 to H. C. Lyons describes a water adhering device using wetted belts, and adapted to be fitted to the top of a chimney. It is, however, the object of all the prior art devices to separate the particles from the stream of hot gas. In order to obtain high efficiency with these devices, great expenditures in equipment and operation are necessary. Further, the material separated from the hot gases cannot always be profitably utilized, thus creating additional expense in disposing of the waste.

It is broadly known to produce bubbles by using a rotating disc. U.S. Pat. No. 2,736,989, issued Mar. 6, 1956 to N. A. Fisher, describes a bubble blowing machine having a disc mounted for rotation about a vertical axis. This patent, however, is only concerned with blowing bubbles.

SUMMARY OF THE INVENTION

It is an object of the present invention to provide an apparatus for reducing the effects of pollution of the atmosphere by particulate matter in hot gases.

This and other objects are achieved according to the present invention by creating a high draft by passing hot gas up a high stack, subjecting hot gas leaving the stack to a bubble-forming medium, and entrapping the hot gas in bubbles formed by the hot gas impinging on the bubble-forming medium. The bubbles thus formed will ascend to such heights before bursting, that the hot gases may be efficiently dispersed.

Apparatus according to the present invention for encapsulating hot gas has means for subjecting a high-draft stream of hot gas to a bubble-forming medium for entrapping the hot gas in bubbles, and means for supplying the bubble-forming medium to the means for subjecting.

In a preferred embodiment of the means for subjecting, a screen wheel is provided having a screen defining

a mesh for carrying the bubble-forming medium, and mounted for rotation about an axis parallel to a high stack and arranged over an outlet of the stack.

The means for supplying preferably has means in direct contact with the screen of the screen wheel for applying the bubble-forming medium thereto. A preferred embodiment of the present invention has the means for applying in the form of an impregnated sponge which wipes the surface of the screen. The sponge forms the bottom of a container arranged over a portion of the screen wheel. A further container defines an open top and is arranged beneath the first container and below the screen wheel for receiving excess quantities of the bubble-forming medium.

Structure is provided for supporting the means for subjecting and the means for supplying on top of a high stack. In addition, means may be provided for regulating the amount of bubble-forming material in the containers, and for maintaining the temperature of the bubble-forming medium in the containers above a predetermined temperature.

These together with other objects and advantages which will become subsequently apparent reside in the details of construction and operation as more fully hereinafter described and claimed, reference being had to the accompanying drawings forming a part hereof, wherein like numerals refer to like parts throughout.

BRIEF DESCRIPTION OF THE DRAWINGS

FIG. 1 is a perspective view showing a device according to the present invention mounted on top of a high stack.

FIG. 2 is a sectional view taken generally along the line 2—2 of FIG. 1.

FIG. 3 is a fragmentary horizontal sectional view taken generally along the line 3—3 of FIG. 2 with certain parts removed and showing a screen wheel according to the present invention.

FIG. 4 is a partially sectional view showing a hot gas filled bubble according to the present invention.

DESCRIPTION OF THE PREFERRED EMBODIMENTS

FIG. 1 of the drawings shows a device **10** according to the present invention mounted on top of a high stack **12**. Stack **12** may be any high industrial stack, or chimney, capable of creating a draft which will cause bubbles **14** to rise 5,000 to 10,000 feet above ground level, where they will burst.

As can be seen from FIG. **2**, a stream of hot gas **16** moving in the direction of the arrow is entrapped in bubbles **14** as it leaves outlet **18** of stack **12**. By the term "hot gas" is meant all hot gases normally emitted from a high stack, including dusts, clouds, and smokes.

Device **10** has a means for subjecting the high-draft stream of hot gas **16** to bubble-forming medium **20**, which is preferably latex, for entrapping the hot gas in bubbles, and a means for supplying the bubble-forming medium **20** to the means for subjecting.

A means for supporting the means for subjecting and the means for supplying at the top of stack **12** has a collar **22** which is dimensioned to, for example, slide down the inclined wall of stack **12** until it fits tightly thereon. For a stack having a straight wall (not shown), suitable known means such as welded brackets (not shown) may be used to stop the collar **22** in the desired loca-

tion. A platform **24** is mounted on collar **22** in a known manner, such as by a weld, rivets, or screw fasteners. Platform **24** defines an opening **26** so as to fit around stack **12.** Braces **28, 30** are preferably provided to assure a rigid structure.

The means for subjecting has means defining a mesh for carrying the medium **20.** Preferably, this means is a screen wheel **32** (FIGS. **2** and **3**). A screen **33** of screen wheel **32** may be, for example, constructed from steel wire and have, for example, four meshes per inch, and is supported by spokes **34** and a rim **36.** Spokes **34** are connected to a hub **38.**

Hub **38** is mounted on a shaft **40** for rotation therewith. Shaft **40** is mounted in bearings **42, 44** for rotation about an axis parallel to stack **12.** Screen wheel **32** is arranged over outlet **18.**

A, for example, known electric motor **46** is mounted on platform **24** in a known manner, and rotates shaft **40** and bevel gears **48, 50** so as to continuously subject the stream of hot gas **16** to medium **20.**

The means for supplying has means in direct contact with screen **33** for continuously applying medium **20** thereto. As seen in FIG. **2,** this means for applying may be a sponge **52.** Sponge **52** may be, for example, a foamed thermoplastic or latex. A container **54** is arranged over a portion of screen wheel **32,** and sponge **52** forms the bottom of container **54.** Walls **56, 58** and a cover **60** enclose container **54.** An opening **62** is defined in cover **60** to provide an access hatch. Member **64** is provided to cover opening **62.**

A further container **66** defining an open top **68** is arranged beneath container **54** and below screen wheel **32** for receiving excess quantities of medium **20.** Container **66** is formed by a bottom member **68** and walls **70, 72,** and is mounted in a known manner on platform **24.** A line **74** is connected between container **54** and container **66** for returning medium **20** from container **66** to container **54.** A pump **76** which may be a known electric pump, may be provided to pump medium **20.** Means such as known float valves **78, 80,** may be used for regulating the amount of medium **20** in containers **54, 66.** Valve **78** may, for example, actuate pump **76** in a known manner when a predetermined level of medium **20** in container **66** is exceeded. Pump **76** will then send medium **20** to container **54.** Valve **80** may open and permit medium **20** to pass from a line **82** into container **54** and provide container **54** with medium **20** when the level of medium **20** in container **54** falls below a predetermined level. Line **82** may be connected to a reservoir (not shown) and medium **20** is preferably maintained at a constant pressure therein.

Heating elements **84** and **86** are advantageously immersed in medium **20** in containers **54** and **66,** respectively, for maintaining medium **20** above a predetermined temperature. A temperature of **60** degrees Fahrenheit has been found satisfactory for liquid latex during cold weather. Furthermore, latex at 60°F. will expand more readily when encapsulating hot gas **16.** Known thermostatic switches **88** and **90** are immersed in medium **20** for actuating elements **84, 86,** respectively, in a known manner. Elements **84, 86** may be, for example, immersible electrical resistant heating elements.

Power for motor **46** and heaters **84, 86** may be supplied in a known manner by, for example, a power cord (not shown) arranged on the outer surface of stack **12.**

A housing **92** defining an opening **94** for passage of bubbles **14** is preferably provided for covering the means for supplying. Housing **92** also defines an opening **96** for providing an access hatch to, for example, motor **46** and pump **76.** A member **98** covers opening **96,** and defines slots **100** for receiving braces **28.**

FIG. **4** shows an individual bubble **102** of bubbles **14.** As can be seen, the, for example, latex bubble is filled with hot gas **16** which has been entrapped therein.

As the stream of hot gas **16** leaves outlet **18** of stack **12,** it is subjected to the film of medium **20,** preferably latex, carried on screen **33.** The hot gas **16** is entrapped in bubbles formed by the hot gas **16** impinging on medium **20.** The bubbles **14** will rise at a fast rate of ascent and enlarge in diameter during their upwardly journey. Eventually, the bubbles will burst because of the continually reduced external pressure. The hot gas encapsulated in the thin film of latex will generally dissipate very efficiently at the usual bursting altitudes of 5,000 to 10,000 feet above ground level.

The foregoing is considered as illustrative only of the principles of the invention. Further, since numerous modifications and changes will readily occur to those skilled in the art, it is not desired to limit the invention to the exact construction and operation shown and described, and accordingly all suitable modifications and equivalents may be resorted to, falling within the scope of the invention.

I claim:

1. Apparatus for encapsulating hot gas, comprising in combination:

a. means for subjecting a high-draft stream of hot gas to a bubble-forming medium for entrapping the hot gas in bubbles; and

b. means for supplying the bubble-forming medium to the means for subjecting said means for supplying including means in direct contact with the means for subjecting for applying the bubble-forming medium thereto, and said means for supplying further including a container arranged over a portion of said means for subjecting, and having a bottom formed by said means for applying.

2. Apparatus as defined in claim **1,** wherein said means for supplying further includes a further container defining an open top and arranged beneath said container and below the means for subjecting for receiving excess quantities of the bubble-forming medium.

3. Apparatus as defined in claim **2,** wherein said means for supplying further includes means for returning bubble-forming medium from said further container to said container.

4. Apparatus as defined in claim **2,** wherein said means for supplying further includes means for regulating the amount of bubble-forming medium in said further container and in said container.

5. Apparatus as defined in claim **2,** wherein said means for supplying further includes means for maintaining bubble-forming medium in said further container and in said container above a predetermined temperature.

6. Apparatus as defined in claim **1,** further including means for providing said container with bubble-forming medium.

7. Apparatus as defined in claim **1,** wherein said means for subjecting includes means defining a mesh for carrying the bubble-forming medium, and mounted

for rotation about an axis parallel to a high stack and arranged over an outlet of the stack.

8. Apparatus for encapsulating hot gas, comprising in combination:

a. means for subjecting a high-draft stream of hot gas to a bubble-forming medium for entrapping the hot gas in bubbles, said means for subjecting including a screen wheel for carrying the bubble-forming medium, and mounted for rotation about an axis parallel to a high stack and arranged over an outlet of the stack; and

b. means for supplying the bubble-forming medium to the means for subjecting, said means for supplying including means in direct contact with the means for subjecting for applying the bubble-forming medium thereto.

9. Apparatus as defined in claim **8,** further including means for supporting said screen wheel and said means for supplying at the top of a high stack, and means mounted on said means for supporting for rotating said screen wheel so as to continuously subject the hot gas to the bubble-forming medium.

10. Apparatus as defined in claim **9,** further including means mounted on said means for supporting for covering said means for supplying.

11. Apparatus for encapsulating hot gas, comprising in combination:

a. means for subjecting a high-draft stream of hot gas to a bubble-forming medium for entrapping the hot gas in bubbles, said means for subjecting including means defining a mesh for carrying the bubble-forming medium, and mounted for rotation about an axis parallel to a high stack and arranged over an outlet of the stack; and

b. means for supplying the bubble-forming medium to the means for subjecting.

12. Apparatus as defined in claim **11,** further including means for supporting the means for subjecting and the means for supplying at the top of the high stack.

13. Apparatus as defined in claim **11,** wherein said means for supplying includes means in direct contact with the means for subjecting for applying the bubble-forming medium thereto.

14. Apparatus for encapsulating hot gas, comprising in combination:

a. means for subjecting a high-draft stream of hot gas to a bubble-forming medium for entrapping the hot gas in bubbles, said bubble-forming medium being latex; and

b. means for supplying the bubble-forming medium to the means for subjecting.

* * * * *