July 9, 1957 O. H. YORK 2,798,515

APPARATUS FOR CORRUGATING AND REFOLDING MESH CLOTH

Filed Nov. 30, 1955 4 Sheets-Sheet 1

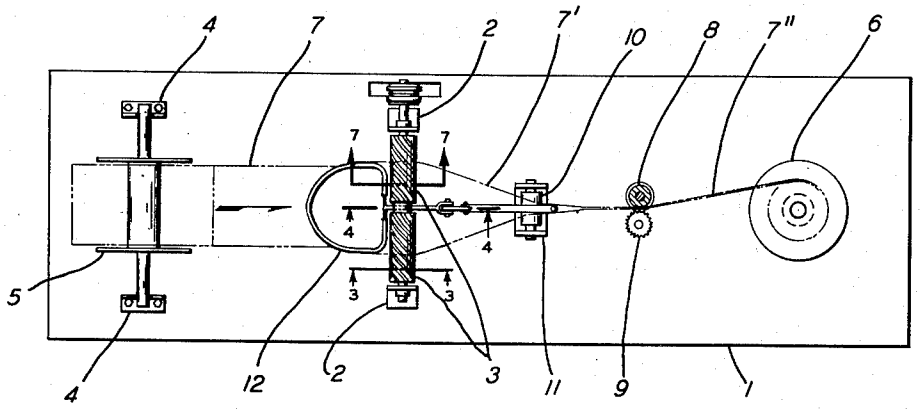

FIG. 2

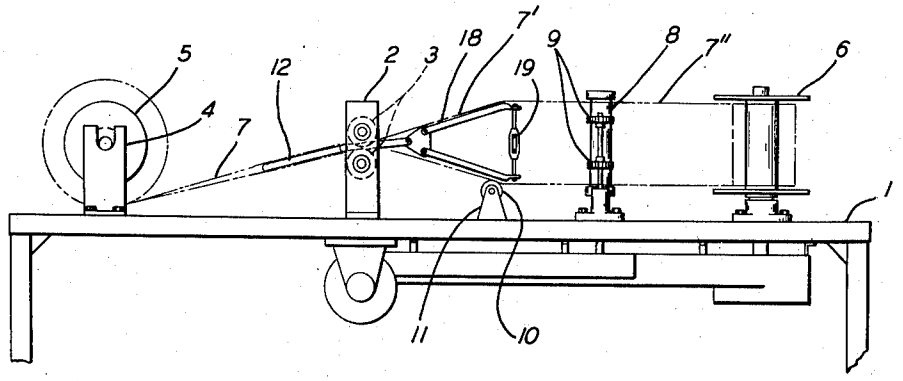

FIG. 1

INVENTOR
OTTO H. YORK

BY: Chester Mueller
ATTORNEY

July 9, 1957 O. H. YORK 2,798,515

APPARATUS FOR CORRUGATING AND REFOLDING MESH CLOTH

Filed Nov. 30, 1955 4 Sheets-Sheet 2

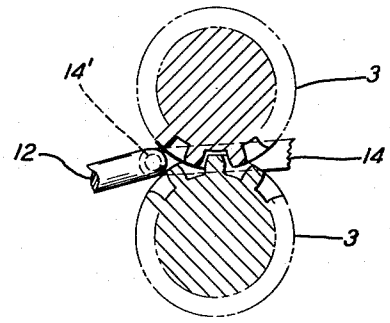

FIG. 3

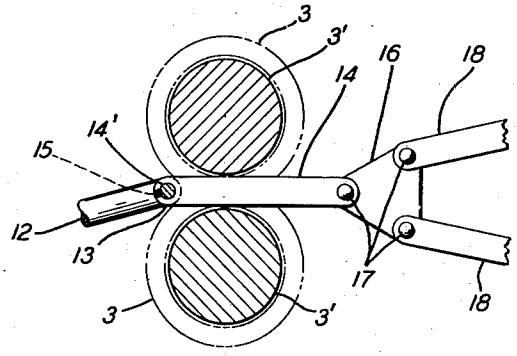

FIG. 4

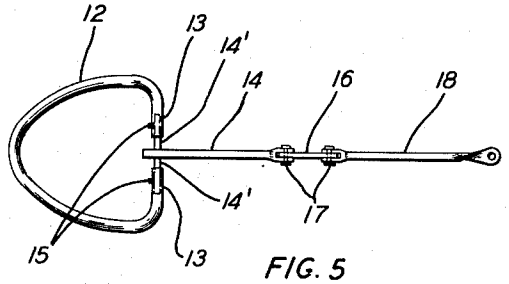

FIG. 5

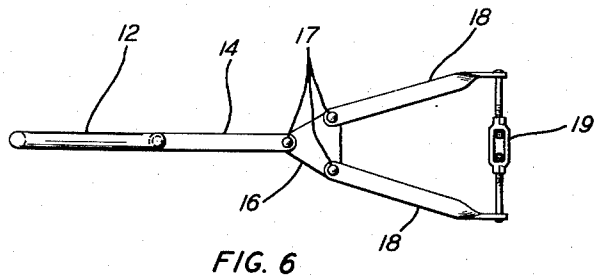

FIG. 6

INVENTOR
OTTO H. YORK

BY: Otto Heller

ATTORNEY

July 9, 1957 O. H. YORK 2,798,515

APPARATUS FOR CORRUGATING AND REFOLDING MESH CLOTH

Filed Nov. 30, 1955 4 Sheets-Sheet 3

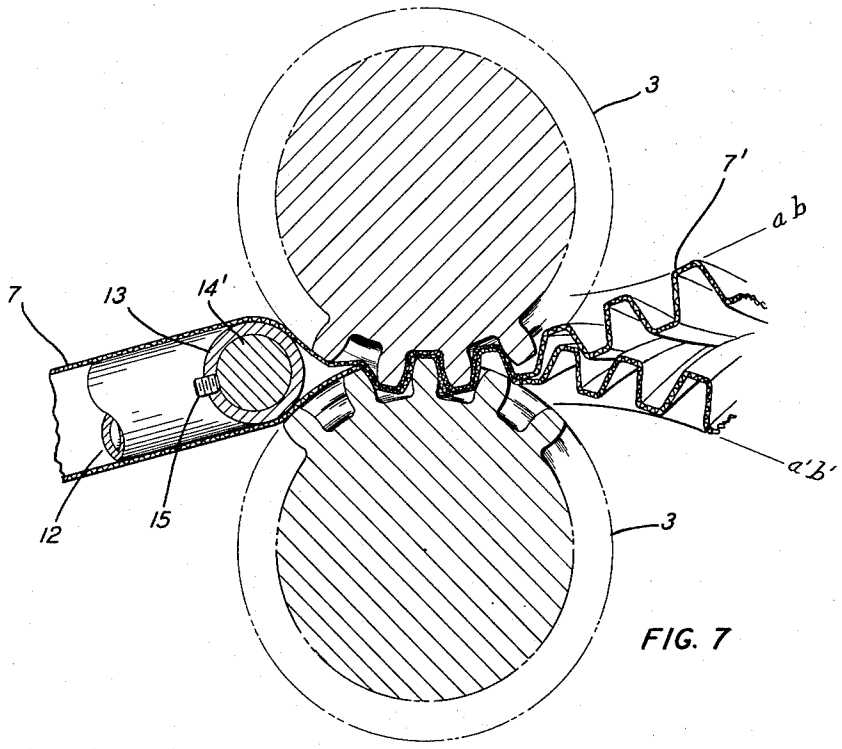

FIG. 7

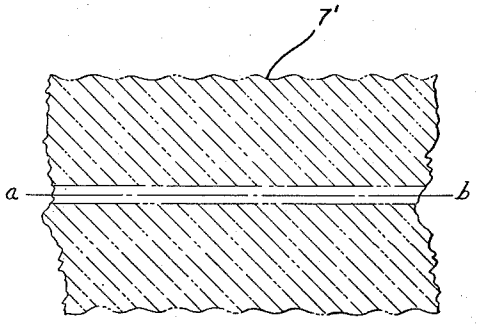

FIG. 8

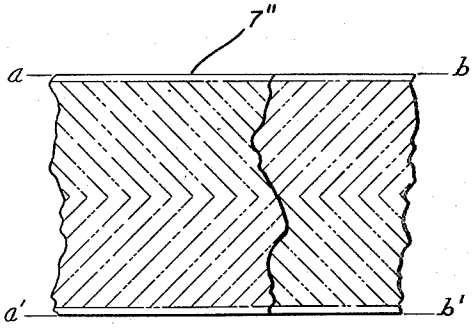

FIG. 9

INVENTOR
OTTO H. YORK

BY: Otto Muller

ATTORNEY

July 9, 1957 O. H. YORK 2,798,515

APPARATUS FOR CORRUGATING AND REFOLDING MESH CLOTH

Filed Nov. 30, 1955 4 Sheets-Sheet 4

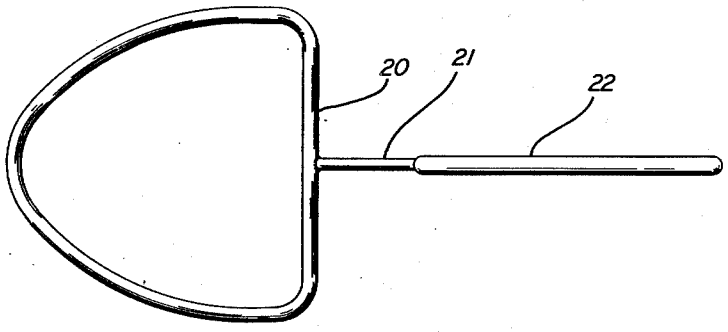

FIG. 10

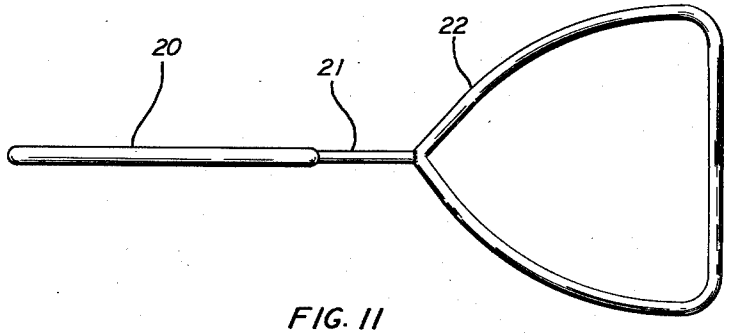

FIG. 11

INVENTOR
OTTO H. YORK

BY: Otto Mueller
ATTORNEY

United States Patent Office 2,798,515 Patented July 9, 1957

2,798,515

APPARATUS FOR CORRUGATING AND REFOLDING MESH CLOTH

Otto H. York, Maplewood, N. J.

Application November 30, 1955, Serial No. 550,018

9 Claims. (Cl. 140—107)

This invention relates to an apparatus or machine for producing a material suitable as a separating medium of the type sometimes employed in the separation of a liquid from a gas or for other uses requiring an interstitial body mass. Specifically, the apparatus is designed to crimp or corrugate and refold tubular knit metallic mesh fabric in a continuous operation.

One object of this invention is to provide an apparatus that will speedily and efficiently produce a double ply strip of corrugated tubular knit metallic mesh wherein the corrugations of one ply will lie in a direction crossing the direction of the underlying corrugations of the other ply, in non-nesting relationship.

Another object is to provide an apparatus that is rugged and economical to manufacture and to maintain.

Still another object is to provide an apparatus that may be easily managed by an inexperienced operator and one that will produce a uniform product.

This invention is illustrated in the accompanying drawings in which:

Figure 1 is a side elevational view of the machine, showing in broken lines, knit metallic mesh passing through it.

Figure 2 is a plan view of the machine of Figure 1.

Figure 3 is a cross section taken through line 3—3 of Figure 2.

Figure 4 is a cross section taken through line 4—4 of Figure 2.

Figure 5 is a plan view of only the spreading and refolding guide structure.

Figure 6 is a side elevational view of the structure of Figure 5.

Figure 7 is an enlarged cross sectional view through the corrugating rollers showing a double ply strip of knit metallic mesh passing between them.

Figure 8 is a plan view of a strip of double ply knit metallic mesh after corrugating and before refolding.

Figure 9 is a plan view of a strip of double ply knit metallic mesh after refolding and with a portion of the top ply removed to disclose the bottom ply, showing the directions of the corrugations.

Figure 10 is a plan view of a modified spreading and refolding structure.

Figure 11 is a side elevational view of the structure of Figure 10.

Referring to the figures in which the same number identifies the same or a similar part, the machine in overall appearance is illustrated in Figures 1 and 2.

The machine is mounted on a table or base **1** and is adapted to draw continuous strip tubular knit metallic mesh from reel **5** at one end and to wind such strip after spreading, corrugating, and refolding upon reel **6** at the other end. Between reels **5** and **6** are mounted the moving and static parts which draw and guide the material between corrugating rollers **3** and then in refolded condition upon reel **6**. Conventional power and driving mechanisms which actuate rollers **3** and **8** and reel **6** are not shown.

The details of the illustrated mechanism are as follows:

Reel **5** upon which a strip of tubular knit metallic mesh **7** is wound, is removably supported in journals **4** mounted on base **1**. Reel **5** is free to rotate as the material is unwound therefrom.

A pair of opposing corrugating rollers **3**, with axles mounted in the same vertical plane, are journalled in adjustable relationship in brackets **2** which stand upright upon base **1**. Spiral corrugations characterize the surface of each roller except in the center where the corrugations are interrupted by groove **3'** which completely encircles the roller. Opposing grooves **3'** form an opening or passage between the intermeshing rollers **3**. By driving means, not shown, rollers **3** are rotatable inward to receive and pass between them in crimping or corrugating engagement mesh **7** as it comes from reel **5**.

Between brackets **2** and reel **6** is vertical tensioning roller **8**, having an appropriate surface to frictionally engage the corrugated and refolded mesh **7''**. Tensioning roller **8** is rotated by power means, not shown, and in cooperation with a pair of guide or positioning cogs **9**, passes mesh **7''** in a vertical plane to reel **6**. Reel **6** is also power rotated with appropriate variable speed controls, not shown, to wind mesh **7''** upon it, its speed decreasing as the diameter of the winding on the reel increases.

Referring to Figures 5 and 6, spreader **12** has an arcuate leading edge, shown in the illustrations as tubular in cross section, having its ends **13** turned inward to form a trailing edge so that their openings are opposite but spaced from each other. Fitted into each open end **13** is an end **14'** of the cross piece of T-shaped link **14**, secured in place by a set screw **15**. Ends **13** are positioned parallel and adjacent to the region in which rollers **3** are in closest proximity to each other with the leg of link **14** loosely passing through the opening between rollers **3** formed by their opposing grooves **3'**. Figure 3 illustrates the position of spreader **12** where the spiral corrugated surfaces of rollers **3** are opposed to each other and Figure 4 shows the relationship at grooves **3'**.

The leg of link **14** is pivotably connected near its extremity to vertical connector plate **16** by a pin **17**. Guide arms **18** are each pivotably connected to plate **16** at one end by pins **17**. The free ends of guide arms **18** are secured to, and separated by, adjustable length rod **19** in a plane perpendicular to that of spreader **12**.

Supporting the lower guide arm **18** is idler wheel **10** which is freely rotatable in brackets **11**.

The operation of the machine is as follows:

Tubular knit metallic mesh **7**, as a continuous sleeve, is drawn over spreader **12** so that spreader **12** lies within it between the upper and lower plies. It is passed between rollers **3** and the spreading and refolding structure being continuous, remains within the sleeve throughout the entire operation of corrugating and refolding. The rear or trailing edge of spreader **12** is drawn by the movement of the mesh toward rollers **3** and with only the upper and lower plies of the mesh intervening, rides against the rollers.

The mesh is corrugated as it passes between rollers **3**, except at grooves **3'**, where a band of mesh remains untouched and subsequently becomes the top and bottom edges of the refolded mesh **7''**. The corrugations are applied as shown in Figure 7. Various surfaces may be used for the rollers other than spiral corrugations as shown, as is well known in the art. In the corrugated condition referred to as mesh **7'**, in appearance as shown in Figure 8, the material then passes over guide arms **18** along line *a—b* as shown in such figure, to be refolded with the newly folded edges on such line and on line *a'—b'*. The refolded mesh **7''** if laid flat will present an appearance as in Figure 9. It will be noted that the

directions of the corrugations of the upper ply or layer cross those of the lower ply or layer, i. e., the corrugations will not nest.

With the several pivot points the floating, guiding and refolding structure is flexible and will readily accommodate itself to variations in the material. The adjustable rod **19** permits adaptation to greater variations. Idler wheel **10** positions the refolded mesh **7''** so it is presented properly to tensioning roller **8** and thence to reel **6**.

With tubular knit metallic mesh of uniform quality and size a rigid spreading and refolding guide structure may be used as shown in Figures 10 and 11. In such figures the spreader **20** is shown as a rigid frame lying in one plane and the refolding guide **22** as a rigid frame lying in another plane at right angles to the spreader. Each frame has a curved leading edge and a straight trailing edge. The midpoint of the trailing edge of spreader **20** is rigidly connected with the midpoint of the leading edge of refolding guide **22** by rod **21**. Rod **21** is adapted to loosely fit within the opening between rollers **3** formed by grooves **3'**. As in the first structure hereinbefore described, the trailing edge of the spreader rides against the corrugating rollers with only the upper and lower plies of the mesh intervening. Thus, the spreader structure properly presents each ply of the mesh to the corrugating surfaces.

Frames are shown for the spreader and the refolding guide because of the lightness of such construction. Obviously flat surfaces at right angles to each other may be used with equal effect if they be joined as herein shown and if the trailing edge of the spreader be of sufficient thickness to resist being drawn between rollers **3**.

Many other modifications may be made in the machine illustrated without departing from the scope of this invention, and it is not intended, therefore, to limit the same by the illustrations herein given.

What I claim is:

1. A machine for corrugating and refolding a continuous strip of tubular knit metallic mesh, comprising a pair of intermeshing corrugated surfaced rollers; a peripheral groove in the surface of one roller, midway its length; a planar member having a rearwardly flaring front edge and a straight rear edge with its rear edge parallel with and adjacent to the rollers where they intermesh; a rod joined with the rear edge of the planar member at right angles thereto and extending in loose fit engagement within the peripheral groove; a pair of arms on the side of the rollers opposite the planar member, each pivotally connected at one end with the rod and diverging therefrom in a plane at right angles to the axis of the rollers; a rod joining the divergent ends of the arms; and means for drawing a strip of tubular knit metallic mesh around and past the planar member, between the rollers and around and past the arms.

2. A machine for corrugating and refolding a continuous strip of tubular knit metallic mesh, comprising a pair of intermeshing corrugated surfaced rollers, said rollers having midway their lengths a pair of opposed peripheral grooves in their surfaces; a planar member having a rearwardly flaring front edge and a straight rear edge with its rear edge parallel with and adjacent to the rollers where they intermesh; a rod joined with the rear edge of the planar member at right angles thereto and extending in loose fit engagement between and through the peripheral grooves of the rollers; a pair of arms on the side of the rollers opposite the planar member, each pivotally connected at one end with the rod and diverging therefrom in a plane at right angles to the axis of the rollers; a rod joining the divergent ends of the arms; and means for drawing a strip of tubular knit metallic mesh around and past the planar member, between the rollers and around and past the arms.

3. A machine for corrugating and refolding a continuous strip of tubular knit metallic mesh, comprising a pair of intermeshing rollers, such rollers having corrugated surfaces and midway their lengths a pair of opposed peripheral grooves in their surfaces; a straight member disposed parallel with the rollers and adjacent where they intermesh; an arcuate member connected at each end with an end of the straight member; a rod joined with the straight member at right angles thereto and extending away from the arcuate member in loose fit engagement between and through the peripheral grooves of the rollers; a pair of arms on the side of the rollers opposite the arcuate member, each pivotally connected at one end with the rod and diverging therefrom in a plane at right angles to the axis of the rollers; a rod joining the divergent ends of the arms; and means for rotating the rollers and for drawing a strip of tubular knit metallic mesh around and past the arms.

4. A machine for corrugating and refolding a continuous strip of tubular knit metallic mesh, comprising a pair of intermeshing rollers, such rollers having spiral corrugated surfaces and midway their lengths a pair of opposed peripheral grooves in their surfaces; a straight member disposed parallel with the rollers and adjacent where they intermesh; an arcuate member connected at each end with an end of the straight member; a rod joined with the straight member at right angles thereto and extending away from the arcuate member in loose fit engagement between and through the peripheral grooves of the rollers; a pair of arms on the side of the rollers opposite the arcuate member, each pivotally connected at one end with the rod and diverging therefrom in a plane at right angles to the axis of the rollers; a rod joining the divergent ends of the arms; and means for rotating the rollers and for drawing a strip of tubular knit metallic mesh around and past the arms.

5. A machine for corrugating and refolding a continuous strip of tubular knit metallic mesh, comprising a pair of intermeshing rollers, such rollers having spiral corrugated-surfaces and midway their lengths a pair of opposed peripheral grooves in their surfaces; a straight member disposed parallel with the rollers and adjacent where they intermesh; an arcuate member connected at each end with an end of the straight member; a rod joined at one of its ends with the straight member at right angles thereto and extending away from the arcuate member in loose fit engagement between and through the peripheral grooves of the rollers; a plate pivotally connected with the other end of the rod; a pair of arms on the side of the rollers opposite the arcuate member, each pivotally connected at one end with the said plate and diverging therefrom in a plane at right angles to the axis of the rollers; a rod joining the divergent ends of the arms; and means for rotating the rollers and for drawing a strip of tubular knit metallic mesh around and past the arms.

6. A machine for corrugating and refolding a continuous strip of tubular knit metallic mesh, comprising a pair of intermeshing rollers, such rollers having spiral corrugated surfaces and midway their lengths a pair of opposed peripheral grooves in their surfaces; a straight member shorter than the rollers disposed parallel thereto and adjacent where they intermesh; an arcuate planar member connected at each end with an end of the straight member; a rod joined at one of its ends with the straight member at right angles thereto and extending away from the arcuate planar member in loose fit engagement between and through the peripheral grooves of the rollers; a plate pivotally connected with the other end of the rod; a pair of arms on the side of the rollers opposite the arcuate planar member, each pivotally connected at one end with the said plate and diverging therefrom in a plane at right angles to the axis of the rollers; a rod joining the divergent ends of the arms; and means for rotating the rollers and for drawing a strip of tubular knit metallic mesh around and past the arms.

7. A machine for corrugating and refolding a continuous strip of tubular knit metallic mesh, comprising a

pair of intermeshing rollers, such rollers having spiral corrugated surfaces and midway their lengths a pair of opposed peripheral grooves in their surfaces; a straight member shorter than the rollers, disposed parallel thereto and adjacent where they intermesh; an arcuate planar member connected at each end with an end of the straight member; a rod joined at one of its ends with the straight member at right angles thereto and extending away from the arcuate planar member in loose fit engagement between and through the peripheral grooves of the rollers; a plate pivotally connected with the other end of the rod; a pair of arms on the side of the rollers opposite the arcuate planar member, each pivotally connected at one end with the said plate and diverging therefrom in a plane at right angles to the axis of the rollers; a rod joining the divergent ends of the arms; a roller support for said pair of arms; and means for rotating the rollers and for drawing a strip of tubular knit metallic mesh around and past the arm.

8. A machine for corrugating and refolding a continuous strip of tubular knit metallic mesh, comprising a pair of intermeshing corrugated surfaced rollers, said rollers having midway their lengths a pair of opposed peripheral grooves in their surfaces; a rod shorter than the rollers disposed parallel thereto and adjacent where they intermesh; an arcuate tubular member turned inward at each end with each such end adapted to receive in friction fit engagement an end of the said rod; a second rod joined at one end with the first rod at right angles thereto and extending away from the arcuate tubular member in loose fit engagement between and through the peripheral grooves of the rollers; a plate pivotally connected with the other end of the second rod; a pair of arms on the side of the rollers opposite the arcuate tubular member, each pivotally connected at one end with the said plate and diverging therefrom in a plane at right angles to the axis of the rollers; an adjustable length rod joining the divergent ends of the arms; a roller support for said pair of arms; and means for rotating the rollers and for drawing a strip of tubular knit metallic mesh around and past the arms.

9. A machine for corrugating and refolding a continuous strip of tubular knit metallic mesh, comprising a pair of intermeshing corrugated surfaced rollers; a peripheral groove in the surface of one roller; a planar member having a rearwardly flaring front edge and a straight rear edge with its rear edge parallel with and adjacent to the rollers where they intermesh; a rod joined with the rear edge of the planar member at right angles thereto and extending in loose fit engagement within the peripheral groove; a pair of arms on the side of the rollers opposite the planar member, each pivotally connected at one end with the rod and diverging therefrom in a plane at right angles to the axis of the rollers; a rod joining the divergent ends of the arms; and means for drawing a strip of tubular knit metallic mesh around and past the planar member, between the rollers and around and past the arms.

References Cited in the file of this patent

UNITED STATES PATENTS

2,189,166	Cohn et al.	Feb. 6, 1940
2,565,846	Goodloe	Aug. 28, 1951
2,591,903	Yost	Apr. 8, 1952