Dec. 4, 1951 T. A. CONLEY 2,577,606

FILTERING MEANS FOR AIR SUPPLY DEVICES

Filed Feb. 15, 1950

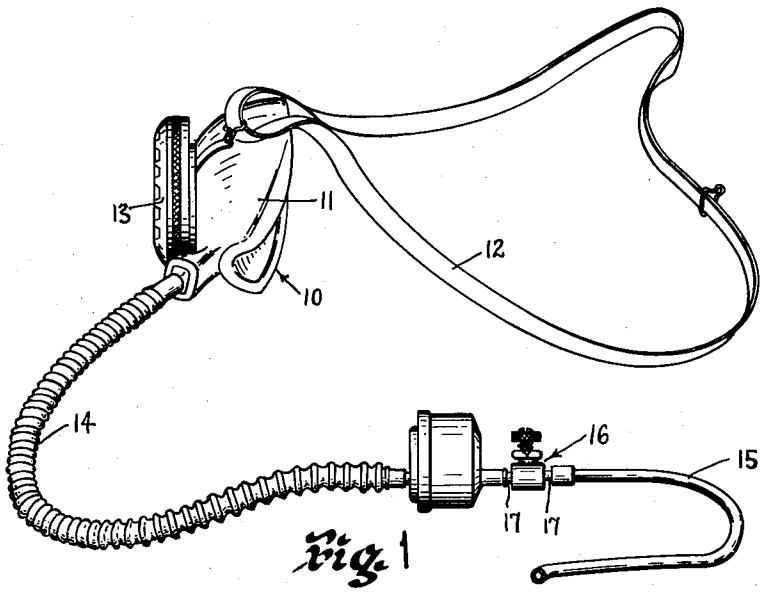

Fig. 1

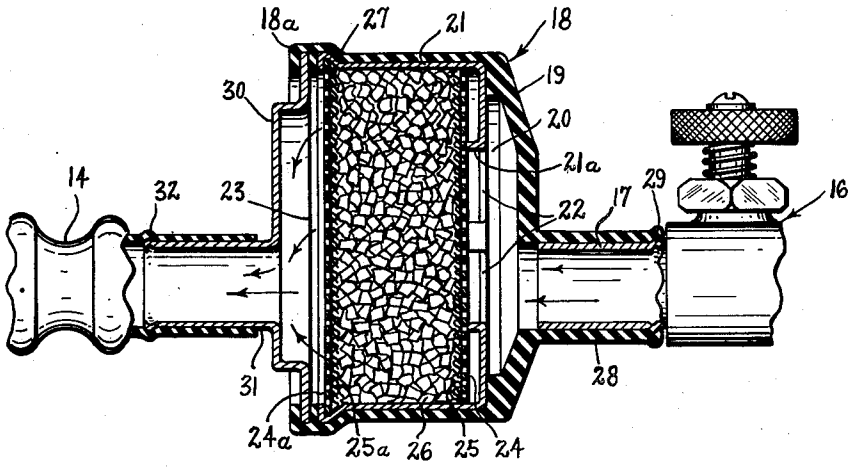

Fig. 2

INVENTOR
THOMAS A. CONLEY
BY
Louis L. Gagnon
ATTORNEY

Patented Dec. 4, 1951 2,577,606

UNITED STATES PATENT OFFICE

2,577,606

FILTERING MEANS FOR AIR SUPPLY DEVICES

Thomas A. Conley, Harrisville, R. I., assignor to American Optical Company, Southbridge, Mass., a voluntary association of Massachusetts

Application February 15, 1950, Serial No. 144,357

7 Claims. (Cl. 183—45)

1

This invention relates to air supply devices of the type embodying means for supplying air under pressure to a personal protective device, and has particular reference to filters for use with such devices.

It is a principal object of this invention to provide filtering means positioned in an air line between an air supply device and a personal protective device for filtering impurities from the air passing through the air line, which filtering means is removably located in a sleeve which is directly connected to the air line, the sleeve being of flexible material for snugly enclosing the filtering means to insure that all air passes through the filtering means before being delivered to the personal protective device.

Another object is to provide a filtering device of the above character in which the flexible sleeve enclosing the filtering means is directly connected on one side to the air line and is provided on its opposed side with a circumferential groove for receiving the peripheral edge of a removable adapter which is connected to the opposite side of the air line, the groove, together with the inherent resiliency of the material of the sleeve, providing means whereby the adapter is securely attached and air sealed to the sleeve.

Another object is to provide a device of the above character in which the inlet and outlet vents are disposed eccentrically of the device and in opposed relation with one another to permit the adjacent portions of the air line connected thereto to be maintained in a position close to the body of the user when in position of use such as when attached to portions of the user's wearing apparel.

Other objects and advantages of the invention are to provide a device of the above character which is relatively simple in construction, efficient in operation, and comparatively economical to manufacture.

Other objects and advantages of the invention will become apparent from the following description taken in connection with the accompanying drawing, in which:

Fig. 1 is a front elevational view of a device embodying the invention; and

Fig. 2 is a fragmentary sectional view of a filtering device showing particularly the construction thereof and the method of attachment to an air line.

In the manufacture of air supply devices wherein air is supplied by means such as an air compressor and is directed under pressure to a

2

personal protective device such as a respirator, sand blast helmet, paint spray hood or the like, the air must necessarily pass through an air line or hose connecting the compressor with the protective device. Air supplied through these lines from air compressors or the like may contain lubricating oil mist, moisture or solid debris such as scale and dust, which impurities are harmful if breathed by the user of the respirator. Therefore, it is important that these impurities be filtered from the air before being supplied for respiratory use. Prior devices for accomplishing this have been generally embodied a casing of substantially rigid material enclosing filter media, which casing sometimes inefficiently encloses the media whereby impure air may pass around the media.

To overcome the foregoing objections, the present invention discloses means and method of providing filtering means which is located preferably on the low pressure side of the air flow regulating valve which is inserted in the air line, and comprises broadly a casing of pliable material characterized by its ability to snugly encompass the filter media, thereby insuring that all air flowing from the compressor is filtered before passing to the protective device.

Referring more particularly to the drawing wherein like characters of reference designate like parts throughout the several views, the invention is embodied in an air supply system comprising a personal protective device 10 in the form of a mask 11 preferably formed of pliable material such as molded rubber or the like and shaped to fit over a portion of the face of a user and held in position of use on the user's head by a headband 12. The mask 10 is provided with conventional exhalation means 13 and has connected thereto one end of a flexible hose 14 which forms a part of an air line leading to an air supply plant (not shown) such as a compressor. The hose 14 is normally connected to a second hose 15 by suitable coupling means and in this instance the coupling takes the form of a conventional valve 16 for controlling the flow of air through the air line to the mask 10. The valve 16 is provided with opposed tubular conduit portions 17 leading therefrom, one of the portions 17 being secured to one end of the hose 15, which hose 15 is connected at its other end to the compressor.

The second conduit portion 17 is adapted to be directly connected with the filtering means 18 which, in accordance with this invention, is inserted between the valve 16 and hose 14 and em-

bodies a flexible filter retainer or casing 19 formed of molded rubber or similar pliable elastic material. It is to be understood here that the casing 19 may be directly connected to the hose 15 by eliminating the valve 16 if desired.

The casing 19 is shaped to receive therein a filter cartridge 20. A preferred form of cartridge comprises a canister 21 having opposed inlet and outlet openings 22 and 23 respectively in its sides for permitting air to pass therethrough, the air stream being indicated by the arrows in Fig. 2. The wall on the inlet side of the canister 21 is provided with a plurality of inwardly directed lugs 21*a* against which is adapted to be seated a perforated sheet 24 of aluminum or similar metal, which sheet is positioned over the entrance openings 22. In superimposed relation with the metal sheet 24 and on the inner side thereof is positioned a sheet of foraminous fabric material 25. Thus, air entering the canister from the valve 16 must pass through the sheets 24 and 25 which serve to partially filter the air. As the air passes through the remaining portion of the canister 21, it is further purified by a supply of activated charcoal 26 which, for best results, is preferably ground to a mesh within the range of from 7 to 14. While charcoal is used in the present example, it is to be understood that other filtering or purifying media can be substituted therefor, depending upon the conditions under which the device is to be used. The charcoal 26 is provided within the canister 21 and prevented from passing outwardly through the outlet opening 23 by a barrier formed of superimposed sheets of perforated metal and foraminous fabric 24*a* and 25*a* respectively similar to the sheets 24 and 25 adjacent the inlet openings 22.

The outlet side of the canister 21 is shaped with a peripheral flange or rim 27 which is adapted to be positioned within a comating groove formed in the pliable casing 18, which casing is adapted, due to its inherent elasticity, to fit snugly around the canister to prevent leakage of air therebetween. The inlet side of the casing 18 is provided with an integral, outwardly extending sleeve portion 28 which is adapted to fit over the conduit portion 17 of the valve 16, or over the end of the hose 15, so that air passing from the hose 15 will be directed into the canister 21. Means such as a circumferential ridge 29 is formed on the conduit portion 17 in the area enclosed by the sleeve 28 to aid in retaining the sleeve 28 in position on the conduit portion 17.

The outlet side of the casing 18 is provided with an internal circumferential groove 18*a* which is adapted to receive the peripheral edge of a disc-like adapter 30 which is used to connect the filtering means with the flexible hose 14 leading to the mask 10. The adapter 30 is formed with a tubular extension 31 which is shaped to be positioned within the end of the hose 14 and which is provided with a circumferential ridge 32 thereon similar to the ridge 29 on the valve conduit portion 17 for more firmly gripping the hose 14 to prevent disconnection of the assembled parts.

It is important to note that in the preferred construction the inlet and outlet portions of the assembled device, or more specifically the sleeve 28 of the casing 18 and the extension 31 of the adapter 30, are disposed in opposed relationship at one side of the longitudinal axis or center of the device. With such eccentric construction the portions of the hoses 14 and 15 adjacent the valve 16 and filtering device 18 can be maintained closer to the body of the wearer than is otherwise possible. This is desirous since it is then possible to support the air line on the belt or wearing apparel of the user without the hoses extending angularly outwardly where they might be damaged or at the least be a hindrance to the user.

By forming the casing 19 of pliable deformable material it will be seen that a filter cartridge can be easily and quickly removed and replaced without the necessity of tools for the purpose by merely flexing the material of the casing to permit removal of the adapter 30 and cartridge 20 whereupon another cartridge can be easily inserted and retained in place by the adapter 30.

From the foregoing it will be seen that all of the objects and advantages of the invention have been accomplished by providing simple, efficient and economical means for incorporating improved filtering means in an air line used for purifying air being transmitted from a compressor or the like to a personal protective device such as a face mask.

While the novel features of the invention have been shown and described and are pointed out in the annexed claims, it will be understood that many changes may be made in the details of construction shown and described without departing from the spirit of the invention. I, therefore, do not wish to be limited to the exact details shown and described as the preferred only are set forth by way of illustration.

I claim:

1. A device of the character described comprising filtering means embodying a canister having an opening in each side communicating with the interior thereof, and filtering media within said canister for purifying air passing therethrough, a hose for directing air to said filtering means, a second hose for conduction of air passing from said filtering means, means for attaching said filtering means to said hoses comprising a casing of pliable material partially enclosing said canister, interfitting means on said canister and said casing for causing the casing to closely encompass the canister to prevent leakage of air therebetween, an internal groove formed circumferentially in said casing, and a disc-like adapter having its peripheral edge closely interfitting with said groove for further enclosing said filtering means, said casing having connection means on the side thereof opposite the adapter and connected to one of said hoses, and said adapter having connection means connected with the other of said hoses whereby air is permitted to pass from said first hose directly to said filtering means and from said filtering means directly to said second hose.

2. A device of the character described comprising filtering means embodying a canister having an opening in each side communicating with the interior thereof, and filtering media within said canister for purifying air passing therethrough, a hose for directing air to said filtering means, a second hose for conduction of air passing from said filtering means, means for attaching said filtering means to said hoses comprising a casing of pliable material partially enclosing said canister, interfitting means on said canister and said casing for causing the casing to closely encompass the canister to prevent leakage of air therebetween, an internal groove formed circumferentially in said casing, and a disc-like adapter having its peripheral edge closely interfitting with said groove for further enclosing said filtering

means, said casing having connection means on the side thereof opposite the adapter and connected to one of said hoses, and said adapter having connection means connected with the other of said hoses whereby air is permitted to pass from said first hose directly to said filtering means and from said filtering means directly to said second hose, said connection means on the casing and the connection means on the adapter being positioned in opposed relation and eccentrically spaced with respect to the longitudinal axis of the filtering means.

3. In an air supply system embodying means for supplying air under pressure through a first hose and a second hose to a personal protective device, filtering means embodying a canister having an opening in each side communicating with the interior thereof, and filtering media within said canister for purifying air passing therethrough, means for attaching said filtering means to said hoses comprising a casing of pliable material partially enclosing said canister, interfitting means on said canister and said casing for causing the casing to closely encompass the canister to prevent leakage of air therebetween, an internal groove formed circumferentially in said casing, and a disc-like adapter having its peripheral edge closely interfitting with said groove for further enclosing said filtering means, said casing having connection means on the side thereof opposite the adapter and connected to one of said hoses, and said adapter having connection means formed thereon connected with the other of said hoses whereby air is permitted to pass from said first hose directly to said filtering means and from said filtering means directly to said second hose.

4. In an air supply system embodying means for supplying air under pressure through a first hose and a second hose to a personal protective device, filtering means embodying a canister having an opening in each side communicating with the interior thereof, and filtering media within said canister for purifying air passing therethrough, means for attaching said filtering means to said hoses comprising a casing of pliable material partially enclosing said canister, interfitting means on said canister and said casing for causing the casing to closely encompass the canister to prevent leakage of air therebetween, an internal groove formed circumferentially in said casing, and a disc-like adapter having its peripheral edge closely interfitting with said groove for further enclosing said filtering means, said casing having connection means on the side thereof opposite the adapter and connected to one of said hoses, and said adapter having connection means formed thereon connected with the other of said hoses whereby air is permitted to pass from said first hose directly to said filtering means and from said filtering means directly to said second hose, said connection means on the casing and the connection means on the adapter being positioned in opposed relation and eccentrically spaced with respect to the longitudinal axis of the filtering means.

5. A device of the character described comprising filtering means embodying a canister having an opening in each side communicating with the interior thereof, and filtering media within said canister for purifying air passing therethrough, a casing member partially enclosing said canister, a cover member having its peripheral portion detachably connected with the casing member for completing the enclosure of said canister, and interfitting means on said canister and one of said members for causing said member to closely encompass the canister to prevent leakage of air therebetween, said casing member having connection means communicating with one side of the filtering media for connection with a first hose and said cover member having connection means communicating with the opposed side of said filtering media for connection with a second hose whereby air is permitted to pass from one hose through said filtering means to the other hose when in connected relation therewith.

6. A device of the character described comprising filtering means embodying a canister having an opening in each side communicating with the interior thereof, and filtering media within said canister for purifying air passing therethrough, a casing partially enclosing said canister, interfitting means on said canister and said casing for causing the casing to closely encompass the canister to prevent leakage of air therebetween, an internal groove formed circumferentially in said casing, and a cover member having its peripheral portion closely interfitting with said groove for further enclosing said filtering means, said casing having connection means communicating with one side of the filtering media for connection with a first hose and said cover member having connection means communicating with the opposed side of said filtering media for connection with a second hose whereby air is permitted to pass from one hose through said filtering means to the second hose when in connected relation therewith.

7. In an air supply system embodying means for supplying air under pressure through a first hose and a second hose to a personal protective device, filtering means embodying a canister having an opening in each side communicating with the interior thereof, filtering media within said canister for purifying air passing therethrough and means for attaching said filtering means to said hoses comprising a casing enclosing said canister and including a cover member detachably connected therewith together with interfitting means on said canister and said casing for causing the casing to closely encompass the canister to prevent leakage of air therebetween, said cover member having connection means communicating with one side of the filtering media for connection with one hose and said casing having further connection means communicating with the opposed side of said filtering media for connection with the other hose whereby air is permitted to pass from said first hose through said filtering means to the second hose.

THOMAS A. CONLEY.

REFERENCES CITED

The following references are of record in the file of this patent:

UNITED STATES PATENTS

Number	Name	Date
767,859	Ballance et al.	Aug. 16, 1904
2,010,424	Willson et al.	Aug. 6, 1935
2,102,037	Schwartz	Dec. 14, 1937
2,316,832	Aghnides	Apr. 20, 1943