July 16, 1929. R. C. BAKER 1,720,877

ROTARY CORE BARREL

Filed April 27, 1927

Fig. 1.

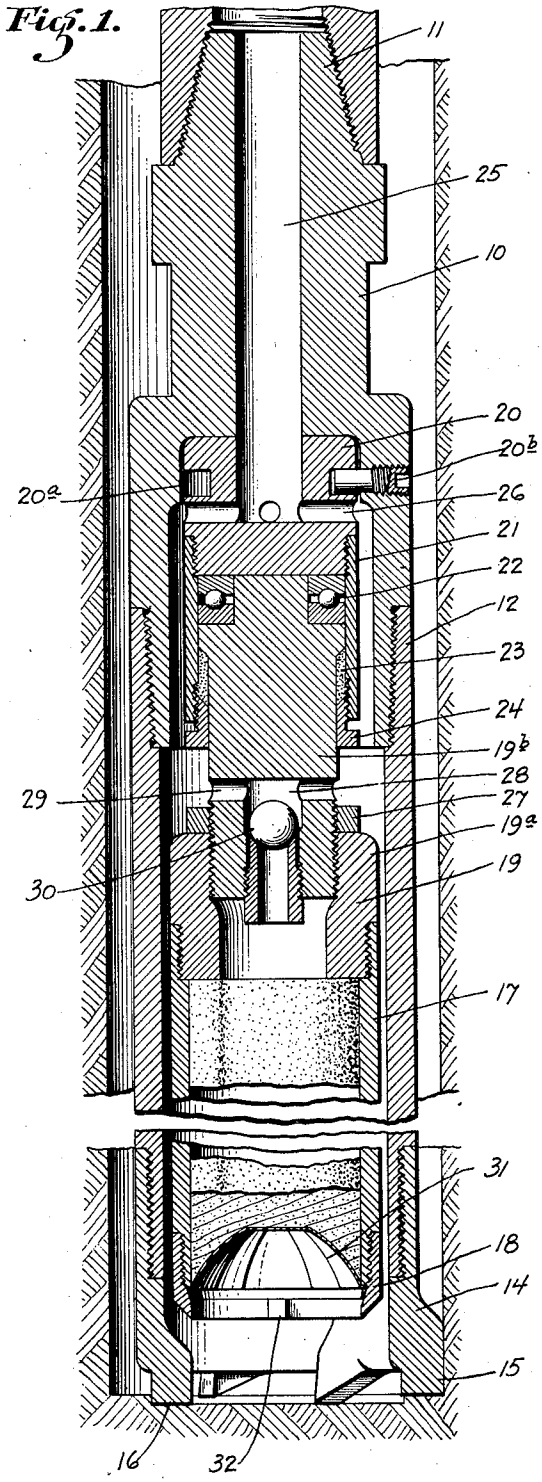

Fig. 2.

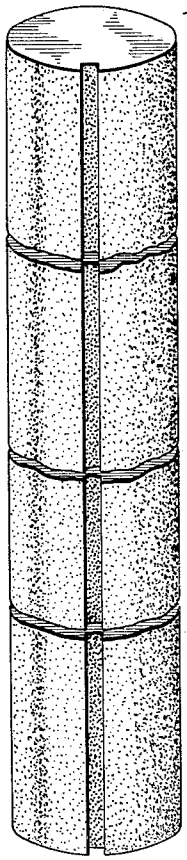

Fig. 3.

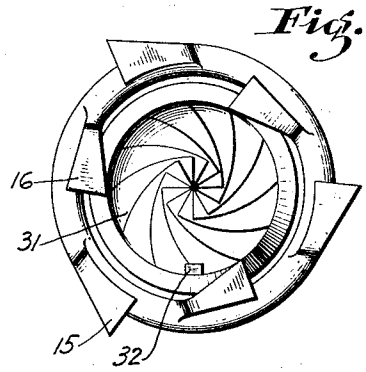

INVENTOR.
Reuben C. Baker.
BY
Townsend Loftus & Abbett
ATTORNEYS.

Patented July 16, 1929. 1,720,877

UNITED STATES PATENT OFFICE.

REUBEN C. BAKER, OF COALINGA, CALIFORNIA, ASSIGNOR TO BAKER CASING SHOE COMPANY, A CORPORATION OF CALIFORNIA.

ROTARY CORE BARREL.

Application filed April 27, 1927. Serial No. 186,909.

This invention relates to oil well drilling equipment and particularly pertains to an apparatus capable of use in taking formation samples or cores of the formation penetrated by the drill. The present apparatus is particularly adapted for use in connection with the rotary method of drilling.

Prior to my invention core barrels most extensively used in rotary drilling embodied an inner and outer barrel which revolved in unison while taking the core. This type of core barrel has not proven entirely successful and satisfactory for several reasons, the chief among which is the fact that the cores were often broken and twisted and when brought to the surface did not present a true core of the well. Another objection to this prior type of core barrel was that the cores often became burned and charred due to the excessive amount of formation required to be drilled while taking the core and the inability to sufficiently lubricate the cutting edges of the drilling shoe. In fact it is well known that considerably more heat is generated by this prior type of core barrel when drilling than could be dissipated through lubrication.

It is the principal object of the present invention to provide an improved core taking apparatus which overcomes the disadvantages of prior devices of the same nature and which is adapted for use in connection with the rotary system of well drilling and capable of obtaining accurate cores of a well in an efficient manner.

In carrying out this object into practice I have constructed a core barrel including a hollow drill barrel which may be run into the well at the end of the rotary drill pipe. Within the hollow drill barrel is mounted an inner core barrel or tube relative to which the drill barrel is rotatable and which is designed to recover the core or sample of the formation as the drill barrel penetrates it.

One form which the invention may assume is exemplified in the following description and illustrated by way of example in the accompanying drawings, wherein:

Fig. 1 is a central vertical section through a core barrel embodying the preferred form of my invention.

Fig. 2 is a perspective view of a core taken by my improved device and disclosing the marking thereon by which broken sections of the core may be properly aligned.

Fig. 3 is a bottom view of the core barrel.

Referring more particularly to the accompanying drawings 10 indicates a drill barrel head having a threaded shank 11 at its upper end by means of which the device may be connected with a rotary drill pipe. The lower end of the drill barrel head 10 is exteriorly threaded so that it may be threadedly connected with the upper end of the drill barrel body 12. This drill barrel body is a cylindrical tube interiorly threaded at its upper end and exteriorly threaded at its lower end. At its threaded lower end the barrel 12 receives a drilling shoe 14 which is capable of penetrating the formation met in the well to advance the drill body therein upon rotation of the drill barrel pipe. It will be noticed from Figs. 1 and 3 that at its cutting end this drilling shoe 14 is provided with two series of cutting teeth 15 and 16, which are differently positioned radially with relation to the center of the barrel. Likewise, these teeth are relatively staggered.

It will be noticed from the drawings that the outer set of teeth 15 are not as long as the inner set of teeth 16. This is to accomplish two series of cuts when drilling to lessen the burden of the operation. It will be noticed that one series of teeth cuts only a portion of the ring or area at the bottom of the well and cuts ahead of the second series. This second series of teeth finishes cutting the ring or maximum area to be drilled, thus, dividing the area to be drilled into two sections and cutting them away separately to lessen the operation. This drilling shoe 14 is illustrated, described and claimed in a copending application entitled "Drilling shoe," filed April 27, 1927, Ser. No. 186,908.

As previously described, the drill barrel including the head 10, the body 12 and the drilling shoe 14 are firmly connected and revolve in unison when the drill pipe is rotated. Loosely arranged within the drill barrel is a core tube 17 having a trimmer shoe 18 threaded on its lower end. At its upper end the core tube 17 is provided with a head 19 threadedly connected to the tube as shown in Fig. 1. This head 19 is formed in two threadedly connected parts 19^a and 19^b.

From Fig. 1 it will be seen that the head 10 of the drill barrel is counterbored at its lower end to receive an upper thrust sub 20. This thrust sub 20 is provided with a peripheral groove 20^a which is engaged by a retaining key 20^b. This key is threaded through

the head 10 in alignment with the groove 20[a], so that its inner end will project within the groove and maintain the thrust sub 20 in position within the head 10. A sleeve 21 is threadedly connected at its upper end to the lower end of this sub thrust 20 and depends downwardly.

The upper portion 19[b] of the head 19 of the core tube is rotatably disposed within the sleeve 21 and bears against the lower end of the thrust sub 20. Interposed between the portion 19[b] of the head 19 of the thrust sub 20 is a thrust bearing 22. At the lower end of the sleeve 21 the diameter of the portion 19[b] of the head 19 is reduced so that packing 23 may be inserted between it and the tube, which packing may be compressed by a packing gland 24 threadedly received in the lower end of the sleeve 21. It is seen that the thrust bearing 22 is fully encased by the sleeve 21, the sub 20 and the packing gland 24. These elements will prevent the ingress of gritty substances such as sand and similar material to the bearing and permit the same to be run in lubrication.

For the purpose of lubricating the drilling end of the drill barrel, the head 10 is provided with a central channel 25 communicating with the enlarged bore thereof which receives the thrust sub 20. This central channel 25 communicates with radial ports 26 formed outwardly through the sub head, forming communication between the channel 25 and the enlarged counterbore in the lower end of the head 10. This counterbore is somewhat larger in diameter than the diameter of the sleeve 21, permitting fluid pumped downwardly through the drill pipe to pass through the channel 25 and ports 26 and downwardly around the sleeve 21 into the bore or interior of the drill barrel.

As the core barrel is somewhat less in diameter than the interior diameter of the drilling barrel, the fluid may pass around the core tube and discharge at the cutting edges of the drilling shoe 14. It is seen that in passing downwardly around the core tube, the fluid will maintain the cutting shoe 18 properly lubricated and assist in preventing the core from being burned as it is taken.

As previously described, the core tube head 19 is formed in two sections which are threadedly connected. It is seen that the section 19[b] is of a diameter considerably less than 19[a] and that its lower end is exteriorly threaded so that it may be threaded into the central bore of the section 19[a]. A lock nut 27 is provided which is threaded on this threaded lower end of the section 19[b] just above the portion 19[a]. Sufficient threads are provided on the section 19[b] to permit a certain amount of adjustment of the overall length of the core tube, and the lock nut 27 is provided to lock the two parts together.

Reference being had to Fig. 1 it is seen that at its lower end the section 19[b] of the core tube head 19 is formed with a central chamber 28 formed upwardly from its lower end. At its upper end this central chamber 28 communicates with radial ports 29 which in turn communicate with the interior of the drill barrel. A check valve structure 30 is provided in this chamber 28 to prevent the circulating fluid passing downwardly through the barrel from entering the core tube through the head 19. This construction permits any fluid entrapped within the core tube while taking the core to escape upwardly through th check valve structure and pass upwardly into the drill barrel where it unites with the circulating fluid passing to the drilling end of the drill barrel.

Arranged within the trimmer shoe 18 at the lower end of the core tube 17 is a core retainer 31 which permits the core to enter the core barrel but prevents its escape therefrom. This core retainer 31 is described and claimed in a co-pending application entitled "Core retainer for core barrels", filed November 22, 1926, Ser. No. 150,042.

It has been found in actual practice that during the taking of a core of considerable length that the entire core does not remain intact and that portions thereof separate from other portions. It is very desirable that the true core of the well be taken and that these broken sections of the core be properly aligned with the remainder so as to retain their proper relative positions just as taken in the well.

In the past this has been extremely difficult because the relative positions of the broken portions of the core change during the removal of the core from the core barrel. To overcome this I have provided a cutting tooth 32 projecting inwardly from the inner periphery of the trimmer shoe 18 at the lower edge thereof. This cutting tooth 32 cuts a longitudinal groove in the core as it is forced in the core tube. This groove is shown in Fig. 3 wherein the core is shown provided with the identifying or aligning groove.

When removing the core the drilling shoe 14 is removed from the barrel and the entire core tube is removed from the drill barrel. The trimmer shoe 18 is then disconnected from the core tube and the core is extracted. If the core is broken into any number of sections, these sections may be properly arranged relative to one another by aligning the groove cut therein by the cutting tooth 32. Thus, an accurate core of the well is obtained.

In operation of the device if it is desired to take a core of a well, the device is connected to the drill stem and run into the well to within a few feet of the bottom. During this time the circulating fluid will escape around the cutting teeth on the drilling shoe and permit it to circulate therethrough until the hole has been washed thoroughly clean. The core barrel is then lowered to the bottom

and the drilling is commenced, the circulation of course being maintained. As the drilling barrel starts revolving the two series of teeth will cut a ring approximately the width of the teeth, leaving an upwardly projecting core.

At this time the circulating fluid will pass freely between the drill barrel and the core tube, and will wash away the cuttings directly at the teeth and lubricate them to keep them cool. As the core barrel penetrates the formation beyond the depth of the teeth, the core thus cut will enter the end of the core tube through the trimmer shoe. This trimmer shoe having a sharp edge further trims off the core.

While the outer drill barrel revolves constantly the core tube does not revolve as it is suspended within the drill barrel in a manner permitting the latter to freely rotate relative thereto. The thrust of the drill barrel on the core tube is taken up by the thrust bearing 22 so that the drilling barrel will rotate freely with relation to the core tube. The construction of the upper end of the core tube and its connection with the upper thrust sub 20 is such that the bearing 22 may be run in a proper lubricant and that foreign substance cannot gain access to this bearing.

During the taking of the core, the fluid entrapped in the core tube will pass upwardly through the check valve 30 and discharge into the bore of the drill barrel. When the desired length of core has been taken the entire structure is removed from the well, the core retaining device 31 preventing the core from dropping through the lower end of the core tube. When brought to the surface the drilling shoe 14 is removed from the drill barrel and the key 20^b is removed, permitting the removal of the entire core tube structure from the drill barrel. When this has been done, the trimmer shoe 18 is removed from the core tube and the entire core is extracted from the core tube. As in most cases this core will be broken into a number of different sections and these sections may be properly aligned due to the fact that a groove will be formed vertically in the core by the tooth 32 in the trimmer shoe.

From the foregoing it is obvious that I have provided an improved core taking apparatus which may be operated efficiently to take accurate cores and wherein the core taking barrel does not rotate, eliminating the twisting and contamination of the cores taken and preventing the cores from being burned or charred.

While I have shown the preferred form of my invention, it is to be understood that various changes may be made in its construction by those skilled in the art without departing from the spirit of the invention, as defined in the appended claims.

Having thus described my invention, what I claim and desire to secure by Letters Patent is:

1. A device for taking cores in a well comprising a drill barrel, a core tube mounted therein, the drill barrel being rotatably connected with the core tube, means for detachably suspending the core tube within the drill barrel, and means for forming an identifying mark longitudinally of the core as it enters the core tube whereby detached portions thereof may be properly aligned when the core is removed from the core tube.

2. A device for taking cores in a well comprising a drill barrel having a head member at one end whereby it may be connected with the drill stem, a drilling shoe at the other end of the drill barrel, a core tube suspended within the drill barrel and relative to which the drill barrel is rotatable, the diameter of the core tube being somewhat less than the interior diameter of the drill barrel, said head member being formed with a lubricating passageway communicating with the space intermediate the core tube and the drill barrel whereby a lubricant may be forced downwardly around the core tube to the drilling shoe, means whereby fluid entrapped within the core tube may escape to the space between the core tube and the drill barrel, and means for forming an identifying mark on the core as it enters the core tube whereby disconnected portions of the core may be properly aligned upon removal of the core tube.

3. A device for taking cores from a well comprising a drill barrel having a head member at its upper end and a drilling shoe at its lower end, said head member being formed with a longitudinal bore, said head member being counterbored within its lower end to form a socket, a thrust sub disposed within the socket and bearing against the head member, means detachably retaining the thrust sub in the socket, a sleeve threadedly connected to the thrust sub and depending therefrom, a core tube disposed within the drill barrel, said core tube having a head member, said head member projecting upwardly within the sleeve, an anti-friction thrust bearing interposed between the head member of the core tube and said thrust sub, and a packing gland structure connected with the lower end of the sleeve and surrounding the head member of the core tube and maintaining the same connected with the sleeve and thrust sub while preventing the entrance of foreign substances to said bearing.

4. A device for taking cores from a well comprising a drill barrel having a head member at its upper end and a drilling shoe at its lower end, said head member being formed with a longitudinal bore, said head member being counterbored within its lower end to form a socket, a thrust sub disposed within the socket and bearing against the head mem-

ber, means detachably retaining the thrust sub in the socket, a sleeve threadedly connected to the thrust sub and depending therefrom, a core tube disposed within the drill barrel, said core tube having a head member, said head member projecting upwardly within the sleeve, an anti-friction thrust bearing interposed between the head member of the core tube and said thrust sub, a packing gland structure connected with the lower end of the sleeve and surrounding the head member of the core tube and maintaining the same connected with the sleeve and thrust sub while preventing the entrance of foreign substances to said bearing, said head member of the core tube being formed in two threadedly connected parts whereby it will be adjustable longitudinally to adjust the overall length of the core tube.

5. A device for taking cores from a well comprising a drill barrel having a head member at its upper end and a drilling shoe at its lower end, said head member being formed with a longitudinal bore, said head member being counterbored within its lower end to form a socket, a thrust sub disposed within the socket and bearing against the head member, a key detachably secured to the head member and engaging the thrust sub to retain the same in the socket, a sleeve threadedly connected to the thrust sub and depending therefrom, a core tube disposed within the drill barrel, said core tube having a head member, said head member projecting upwardly within the sleeve, an anti-friction thrust bearing interposed between the head member of the core tube and said thrust sub, a packing gland structure connected with the lower end of the sleeve and surrounding the head member of the core tube and maintaining the same connected with the sleeve and thrust sub while preventing the entrance of foreign substances to said bearing, said core tube, sleeve and thrust sub being of a diameter somewhat less than the interior diameter of the drill barrel and the counterbore in the head member of the drill barrel, said thrust sub being formed with lubricating passageways communicating with the bore of the head member in the drill barrel and with the space intermediate the core tube and the drill barrel whereby a lubricant may be pumped downwardly through the head member of the drill barrel and discharged at the cutting edge of the drilling shoe.

6. A device for taking cores from a well comprising a drill barrel having a head member at its upper end and a drilling shoe at its lower end, said head member being formed with a longitudinal bore, said head member being counterbored within its lower end to form a socket, a thrust sub disposed within the socket and bearing against the head member, a key detachably secured to the head member and engaging the thrust sub to retain the same in the socket, a sleeve threadedly connected to the thrust sub and depending therefrom, a core tube disposed within the drill barrel, said core tube having a head member, said head member projecting upwardly within the sleeve, an anti-friction thrust bearing interposed between the head member of the core tube and said thrust sub, a packing gland structure connected with the lower end of the sleeve and surrounding the head member of the core tube and maintaining the same connected with the sleeve and thrust sub while preventing the entrance of foreign substances to said bearing, and means for forming an identifying mark longitudinally of the core as it enters the core tube for the purpose of aligning disconnected sections of the core after it has been removed from the core tube.

REUBEN C. BAKER.