April 20, 1926. 1,581,198

J. G. GRAMSA

MOTION PICTURE FILM CLEANER

Filed June 5, 1924 2 Sheets-Sheet 1

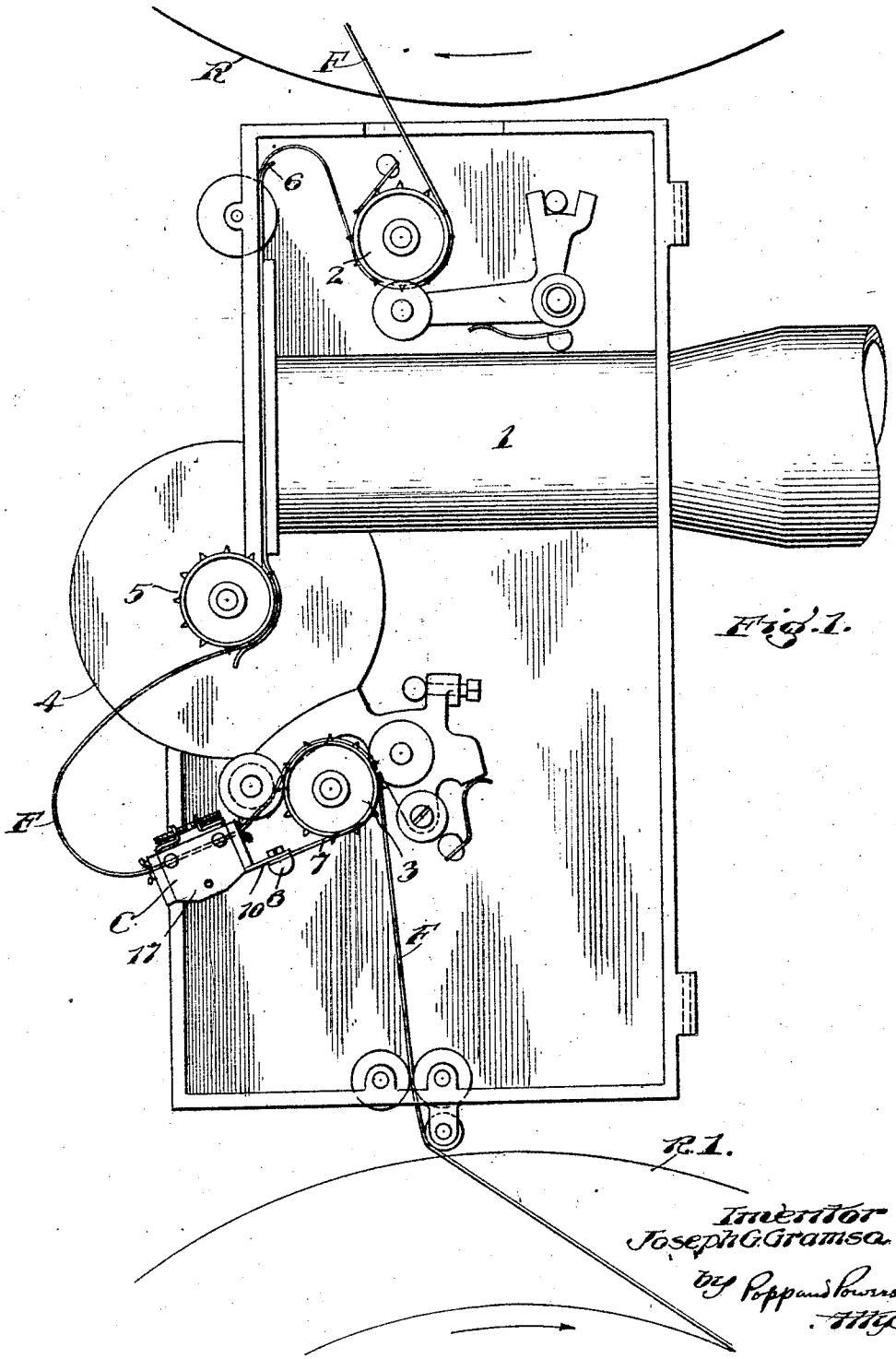

Fig. 1.

Inventor
Joseph G. Gramsa
by Poppenhouse
Attys

April 20, 1926. 1,581,198

J. G. GRAMSA

MOTION PICTURE FILM CLEANER

Filed June 5, 1924 2 Sheets-Sheet 2

Fig. 2.

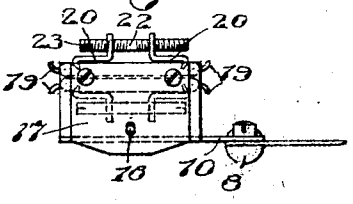

Fig. 3.

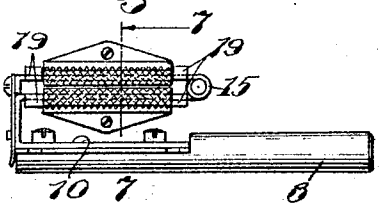

Fig. 5.

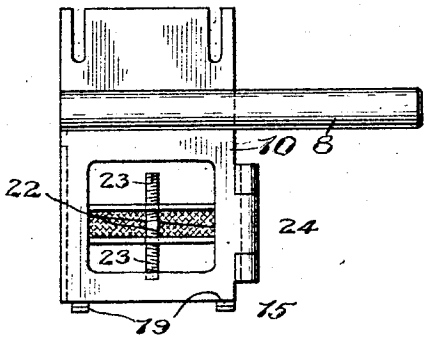

Fig. 4.

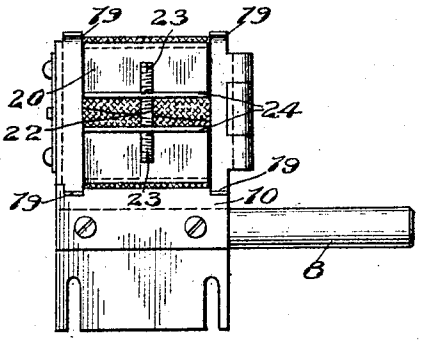

Fig. 8.

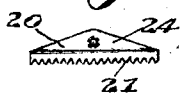

Fig. 6.

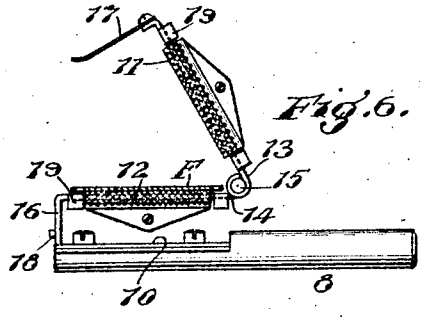

Fig. 7.

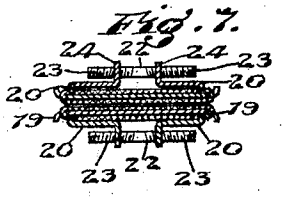

Inventor.
Joseph G Gramsa
by Popp and Powers
Attys.

Patented Apr. 20, 1926. 1,581,198

UNITED STATES PATENT OFFICE.

JOSEPH G. GRAMSA, OF BUFFALO, NEW YORK, ASSIGNOR OF ONE-HALF TO ELMER B. CHAPMAN, OF BUFFALO, NEW YORK.

MOTION-PICTURE-FILM CLEANER.

Application filed June 5, 1924. Serial No. 718,146.

To all whom it may concern:

Be it known that I, JOSEPH G. GRAMSA, a citizen of the United States, residing at Buffalo, in the county of Erie and State of New York, have invented a new and useful Improvement in Motion-Picture-Film Cleaners, of which the following is a specification.

This invention relates to improvements in motion picture film cleaners.

The principal objects are to provide a film cleaner which may be used with facility as an attachment of the projecting machine and which will effectively remove oily or gummy matter or dust adhering to the film surface without creating any destructive stress in the film, to provide for the ready renewal of the cleaning elements, to secure by means of the film cleaner in its relation to other parts of the machine the benefits of a tension equalizer for the take-up reel, thereby to insure uniform take-up and to minimize the liability of breakage of the film at a point along the periphery of the lower sprocket, and to provide for these purposes a device of simple and inexpensive construction which may be readily applied to or removed from the projecting machine.

With the above objects in view the invention consists generally in novel features of structure and combination characterizing the film cleaner and also in novel features of arrangement characterizing the combination of the film cleaner with the projecting machine whereby to secure the benefits of a tension equalizer for the re-winding or take-up reel.

The invention is illustrated in the accompanying drawings in which:

Figure 1 is a side elevation showing the film cleaner in use with a projecting machine of known construction.

Figure 2 is a side elevation of the film cleaner.

Figure 3 is an end elevation thereof.

Figure 4 is a top plan view.

Figure 5 is a bottom plan view.

Figure 6 is an end elevation showing the cleaning elements separated to permit the introduction of the film between them.

Figure 7 is a section on the line 7—7 of Figure 3.

Figure 8 is a detail view of one of the securing parts for the cleaning elements.

The projecting machine shown in Figure 1 may be of any suitable construction and requires no illustration except as to those details which are involved in the use of the film cleaner. The lens holder 1, the upper sprocket 2, the lower sprocket 3 and the intermittent feed mechanism indicated by the showing of its casing 4 and its sprocket 5 are all arranged in the usual manner. The film F passes from the reel R over the upper sprocket 2 and thence over the guide plate 6 and across the aperture of the machine below which it is engaged by the sprocket 5 of the intermittent feed mechanism whence the film passes over the lower sprocket 3 to the take-up reel R^1. The film cleaner illustrated generally at C in Figure 1 may be located as desired but it is preferably and in accordance with one of the features of the invention located between the sprocket 5 of the intermittent feed mechanism and the lower sprocket 3, its cleaning elements engaging the portion of the film which is disposed in loop form between said sprockets. To prevent the film from rewinding on the sprocket 3 in the event of its breakage at a point below said sprocket it is customary to employ a plate 7 which is arranged adjacent the lower side of the sprocket and is mounted on a laterally projecting post 8. This post may be conveniently utilized for the support of the film cleaner C, the same being secured in position by screws threaded into the post and engaging an attachment plate 10 which is carried by the film cleaner.

The film cleaner includes upper and lower cleaning elements 11 and 12 of suitable textile material between which the film is drawn, the cleaning elements operating on the opposite faces of the film and their operation being aided by impregnating them with any suitable cleaning fluid. The cleaning elements 11 and 12 are supported whereby they may be relatively positioned to engage the film or may be spaced apart to permit the introduction of the film between them or the removal of the film from the machine. The film cleaning elements are accordingly carried by plates 13 and 14 respectively which are hingedly connected as at 15 along a line parallel to the longitudinal axis of the film. The lower plate 14 is provided at its side remote from the hinge joint 15 with a depending flange 16 from which the attachment plate 10 projects. The plates

13 and 14 are normally, that is to say during the operation of the film cleaner, suitably connected whereby the cleaning elements bear with the requisite pressure upon the film and for this purpose it is convenient to employ a spring latch finger 17 which is secured to the side of the plate 13 remote from the hinge 15 and which co-operates with a pin 18 carried by the flange 16.

The cleaning elements 11 and 12 are in the form of strips which lie against the inner faces of the plates 13 and 14 and are bent or wound around the transverse edges of said plates to lie over the outer faces thereof. The only portion of the film which requires cleaning is the picture bearing portion; and to avoid any tearing stresses on the edge portions, which are weakened by the provision of the holes for engagement with the sprocket wheels, the elements 11 and 12 are made no greater in width than the picture bearing portion of the film and are held in exact registry with said picture bearing portion. The plates 13 and 14 are coextensive in width with the film and are provided beyond their transverse edges with projecing tongues 19 which overlie the perforated edge portions of the film and between which the cleaning elements 11 and 12 are passed, the tongues 19 thus preventing the cleaning elements from shifting laterally and holding them in a position to engage only the picture bearing portion of the film.

The cleaning elements are drawn taut in overlying relation to the plates 13 and 14 and are backed by said plates which thus cause the cleaning elements to bear with the requisite degree of pressure upon the film. The means for holding the cleaning elements may be varied but is preferably of the construction disclosed, the same comprising for each cleaning element a pair of plates 20, each provided with a transverse row of teeth 21. The plates 20 constitute gripping jaws, their teeth 21 being engaged with the adjacent overturned outer layers of the cleaning elements and the plates of each pair being drawn toward one another whereby to hold the adjacent outer layers of the cleaning element under tension. For such adjustment of the plates of each pair a coupling screw 22 having oppositely threaded end portions 23 is employed, the portions 23 being engaged with threaded apertures formed in lugs 24 provided on the plates 20. It will be obvious that the jaws 20 may be drawn toward one another by turning the screw 22 in the appropriate direction, thereby to secure the cleaning element, or may be moved away from one another by turning the screw 22 in the opposite direction, thereby to permit the removal of the cleaning element. When the outer overturned layers of the cleaning element are drawn taut they exert a pull against the teeth 21 and the jaws 20 are thereby held in operative position and their engagement with the cleaning element maintained. After a period of use the cleaning elements become soiled whereby it is necessary to replace them with new cleaning elements. This may be readily done by turning the screw 22 in the direction required to move the jaws 20 away from one another until the adjacent outer layers of the cleaning element are quite slack or loose at which time the unit composed of the pair of jaws 20 and their connecting screw 21 may be readily lifted from engagement with the cleaning element and, the plates 13 and 14 having been spread apart as shown in Figure 6, the cleaning element may be readily unwound and removed from its backing plate and a new one substituted and secured in the manner described. The period in which the cleaning elements will become sufficiently soiled to render their replacement advisable will depend on the conditions of use but the safest and most satisfactory practice will be for the operator to change the cleaning elements after an arbitrary period, say each day before commencing the use of the projecting machine.

The cleaning elements operate as absorbent frictional pads and, as the film passes through the machine, take up all the foreign matter which may have adhered to its surfaces. In this way the film is cleaned during each run and the projected image will be very clear and free from any blemishes not inherent in the film itself. By incorporating the film cleaner with the projecting machine the operation of cleaning the film proceeds automatically with the operation of the machine and nothing is left for the operator to do except to give reasonable attention to the substitution of new cleaning elements, an operation which requires only a few minutes.

The film cleaner having the features above set forth may be placed at any location on the machine where its use may be practical or it may be used independently of the machine, but it is preferably located as shown and described, that is to say between the sprocket of the intermittent feed mechanism and the lower sprocket of the machine. Ordinarily the most vulnerable part of the film as regards liability to breakage is in that portion which extends over the lower sprocket wheel and such liability to breakage is most pronounced at the beginning of the operation of the take-up reel and decreases as the diameter of the film roll on the take-up reel increases. The film cleaner, located as described, due to the pressure which it exercises on the films, keeps the portion of the film between it and the take-up reel in a constant state of tension which is not affected by the operation of the intermittent mechanism and in this way great-

ly minimizes or substantially avoids liability of the film being broken at a point between the lower sprocket wheel and the take-up reel.

Having fully described my invention, I claim:

1. A cleaner for motion picture films comprising a pair of backing plates between which the film may be fed, a cleaning element fitted upon each backing plate and consisting of textile material, means for securing the cleaning elements to the plates, said means being operative to permit the removal of the cleaning elements, means for holding the cleaning elements out of contact with the perforated edge portions of the film, and means acting on the backing plates whereby said plates cause the cleaning elements to bear with suitable pressure upon the film.

2. A cleaner for motion picture films comprising a pair of backing plates between which the film may be fed, a cleaning element fitted upon each backing plate and consisting of textile material, means for securing the cleaning elements to the plates, said means being operative to permit the removal of the cleaning elements, the plates being provided at their ends with projecting tongues arranged to overlie the perforated edge portions of the films and between which the cleaning elements extend, said tongues serving to hold the cleaning elements out of contact with the edge portions of the film, and means acting on the backing plates whereby said plates cause the cleaning elements to bear with suitable pressure on the film.

3. A cleaner for motion picture films comprising a pair of backing plates between which the film may be fed, a cleaning element fitted upon each backing plate and consisting of a strip of textile material wound over the ends of the plate to overlie the outer face thereof, means for securing each cleaning element to its backing plate consisting of a pair of jaws having teeth to engage the adjacent overlying portions of the cleaning element and means connecting the jaws and operative to move them toward or away from one another, and means acting on the backing plates whereby said plates cause the cleaning elements to bear with suitable pressure on the film.

4. In a motion picture machine the combination with the usual intermittent film feeding mechanism, and lower sprocket over which the film passes to the take-up reel of a film cleaner arranged between said mechanism and lower sprocket and comprising a pair of opposed cleaning pads and means to cause said pads to bear frictionally upon a portion of the loop of film extending between the intermittent mechanism and the lower sprocket, thereby to clean the film as it passes through the machine and also to keep the portion of the film between the lower sprocket and the take-up reel under constant tension.

In testimony whereof I affix my signature.

JOSEPH G. GRAMSA.