Feb. 3, 1931. J. K. GRONDAHL 1,790,985

ELECTRICAL SIGNALING SYSTEM

Original Filed July 30, 1926 4 Sheets-Sheet 1

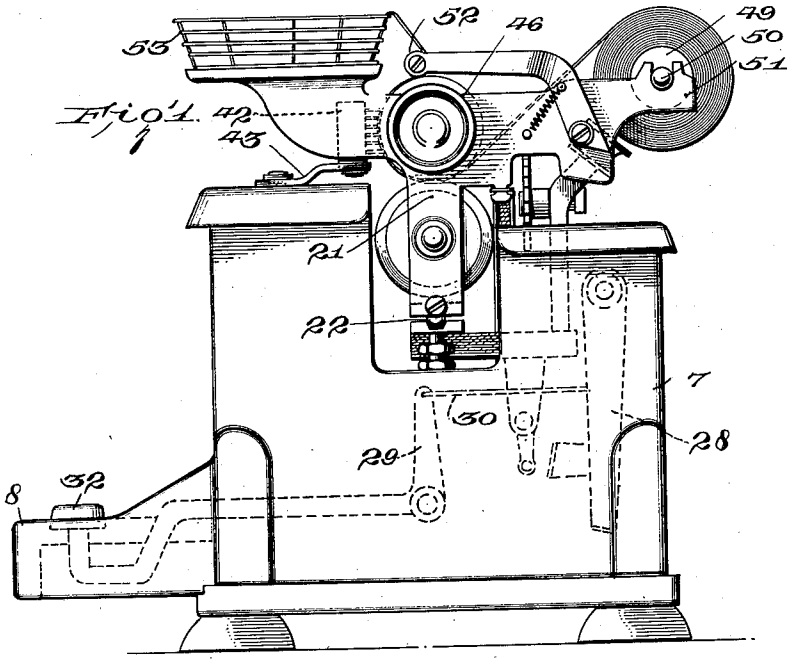

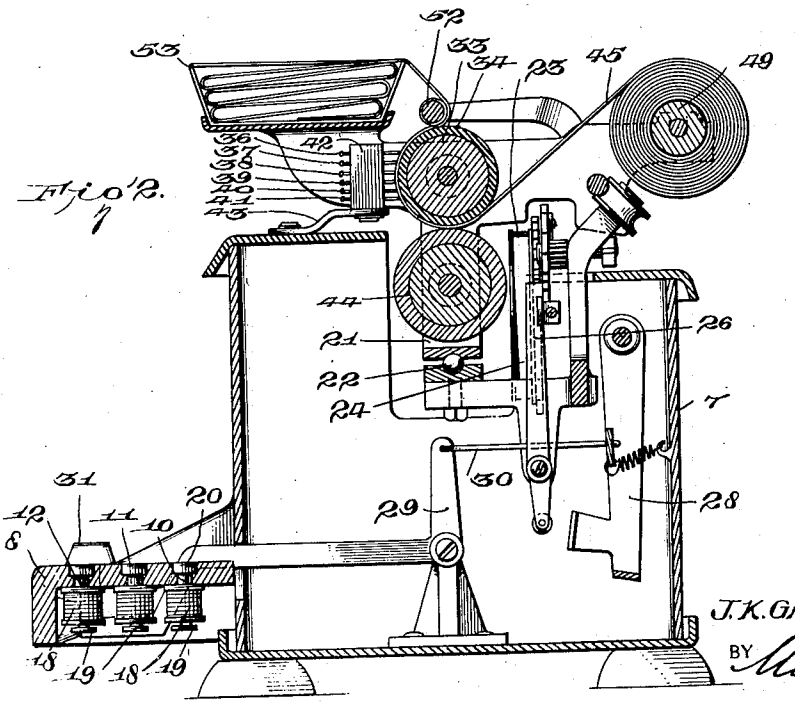

INVENTOR
J. K. Grondahl
BY Munn & Co.
ATTORNEYS

Feb. 3, 1931. J. K. GRONDAHL 1,790,985

ELECTRICAL SIGNALING SYSTEM

Original Filed July 30, 1926 4 Sheets-Sheet 2

Fig. 4.

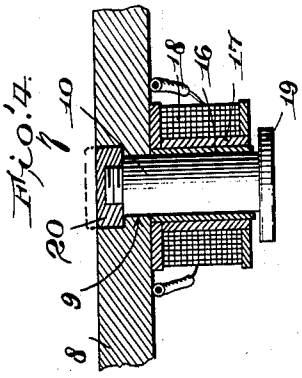

Fig. 3.

WITNESSES

M. Fowler

J. P. Schrott

INVENTOR

J. K. Grondahl

BY Munn & Co

ATTORNEYS

Feb. 3, 1931. J. K. GRONDAHL 1,790,985

ELECTRICAL SIGNALING SYSTEM

Original Filed July 30, 1926 4 Sheets-Sheet 3

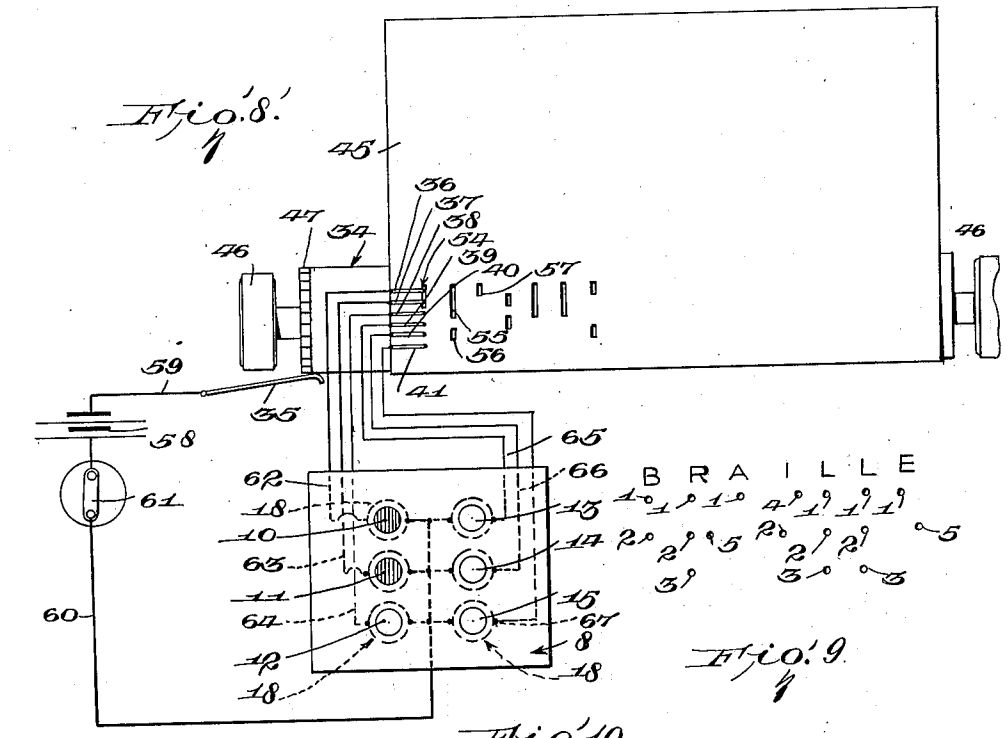

Fig. 9.

Fig. 10.

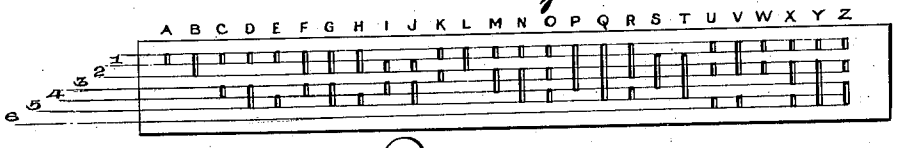

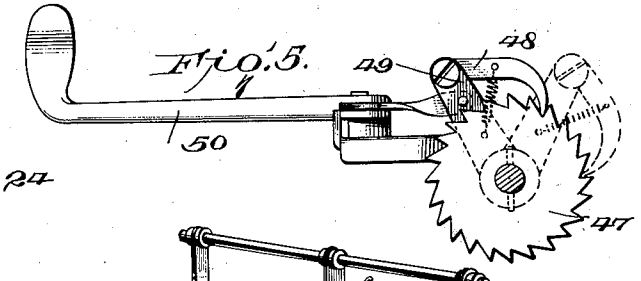

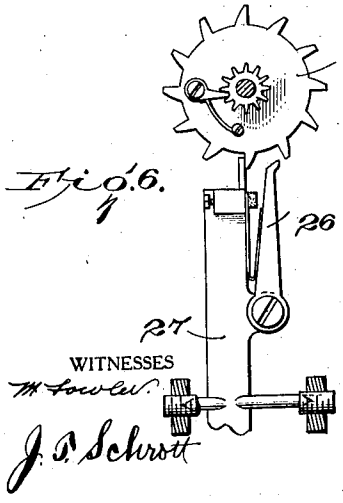

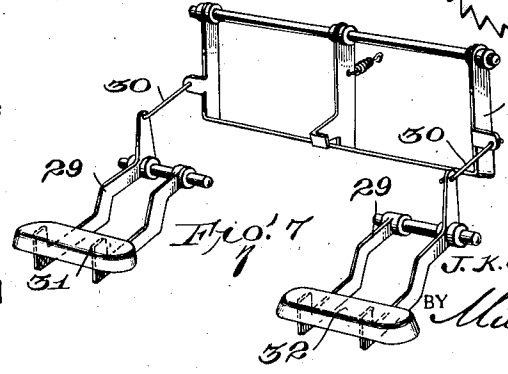

WITNESSES

M. Fowler

J. P. Schrott

INVENTOR

J. K. Grondahl

BY Munn & Co.

ATTORNEYS

Feb. 3, 1931. J. K. GRONDAHL 1,790,985

ELECTRICAL SIGNALING SYSTEM

Original Filed July 30, 1926 4 Sheets-Sheet 4

Fig. 11.

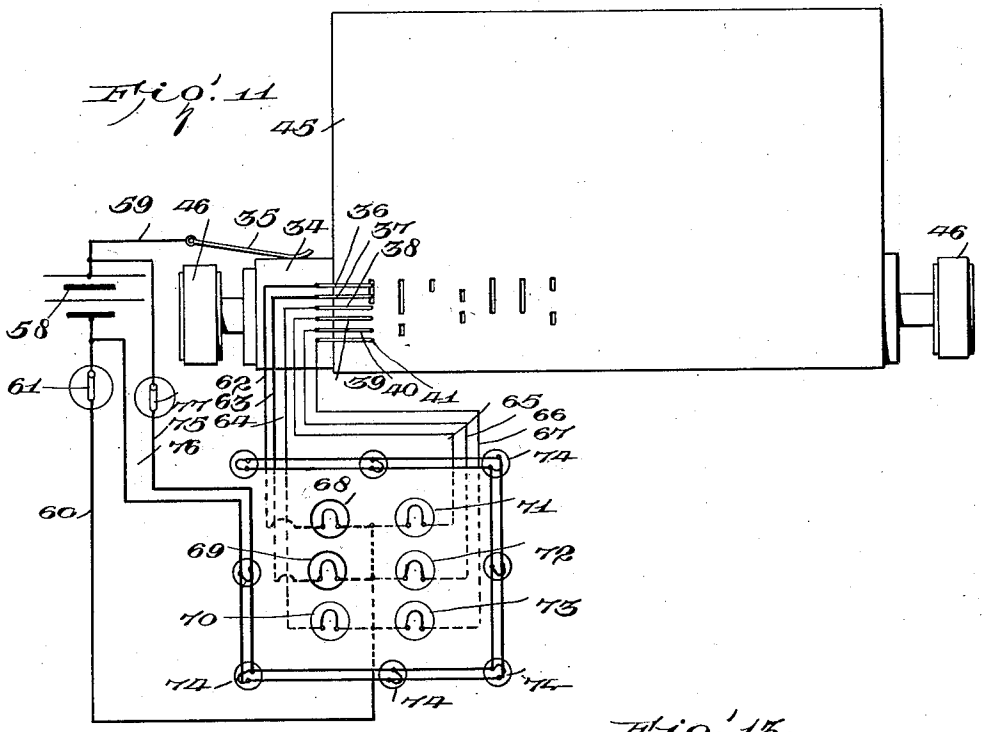

Fig. 15.



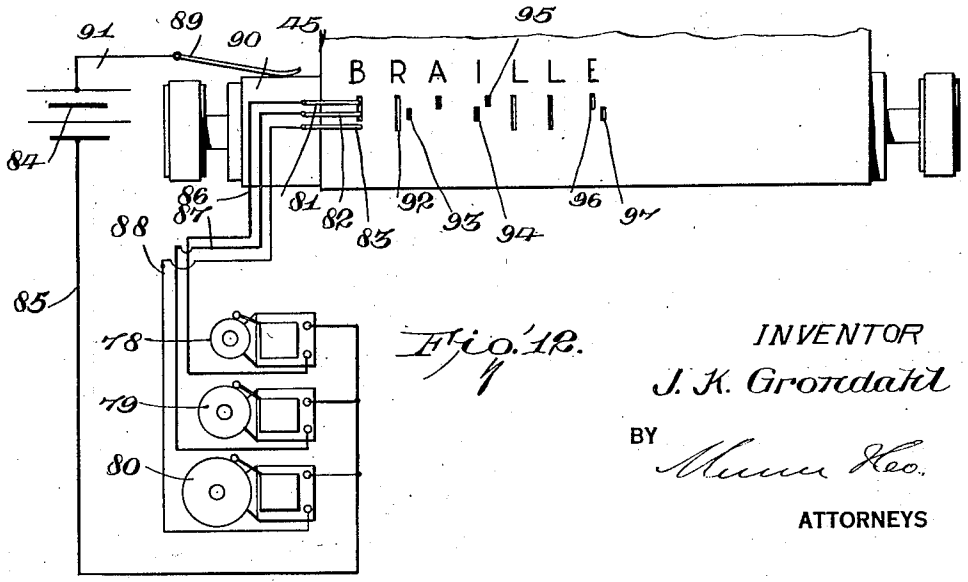

Fig. 12.

INVENTOR

J. K. Grondahl

BY Munn Reo.

ATTORNEYS

Patented Feb. 3, 1931 1,790,985

UNITED STATES PATENT OFFICE

JENS K. GRONDAHL, OF RED WING, MINNESOTA

ELECTRICAL SIGNALING SYSTEM

Application filed July 30, 1926, Serial No. 126,057. Renewed August 9, 1930.

This invention relates to improvements in electrical signaling systems, an object being to provide an apparatus for readily communicating intelligence to blind, near-blind and partially deaf persons.

Other objects and advantages appear in the following specification, reference being had to the accompanying drawings, in which

Figure 1 is an end elevation of the translating machine.

Figure 2 is a vertical cross section thereof.

Figure 3 is a plan view of the translating machine.

Figure 4 is a detail section of one of the plungers, taken on line 4—4 of Figure 3,

Figure 5 is a detail view of known mechanism for turning the platen,

Figure 6 is a detail view of the carriage escapement,

Figure 7 is a detail perspective view of the space-bar mechanism,

Figure 8 is a diagram of the electrical arrangement for operating the plungers of the reading board,

Figure 9 is a detail view illustrating the position of the raised dot spelling the word "Braille" in the alphabet of that name,

Figure 10 is a view of the code of perforations adapted for translating the letters of the Braille alphabet by use of the foregoing machine,

Figure 11 is a diagram illustrating the electrical arrangement when incandescent lamps are employed as the signaling means,

Figure 12 is a diagram illustrating the electrical arrangement when bells of different pitches are employed as signaling means,

Figure 13 is a detail view of the code of perforations, modified to suit the purpose of Figure 12.

The invention as herein disclosed pertains to an electrical signaling system and apparatus for the purpose of conveying intelligence to blind, near-blind and partially deaf persons, but it is anticipated that the principles may apply in any case where sound, light or moving objects, singly or in combination may be used to carry an idea by touch, eye or sound.

In applying the system to reading by the blind or near-blind, advantage is taken of the knowledge which blind people have of the present system of Braille reading by means of which raised dots indicate to the touch of the blind by their position on the paper the letters which go to make up a word. The American revised Braille alphabet consists of six dots in vertical and oblong formation, two vertical rows of three dots each constituting the imaginary oblong.

Figure 8 is intended to illustrate the position of the raised dots when the word "Braille" is written according to the system of that name. It is seen that the letter "B" consists of dots 1 and 2 in the first and second positions of the first row in the imaginary oblong. The letter "R" comprises dots 1, 2, 3 and 5 in the first and second sets of rows. The letter "A" consists of dots 1 in the first row, the letter "I" the dots 2 and 4 in the first and second rows, the letter "L" dots 1, 2 and 3 in the first rows, and the letter "E" the dots 1 and 5 in the first and second rows. Dot 6 does not appear in the word but according to the Braille alphabet occurs first in the letter "U" which consists of dots 1 and 3 in the first row and of dot 6 in the second row.

The machine in Figures 1 to 8 inclusive provides for communicating the Braille alphabet by touch other than the feeling of the raised dots in Figure 9. Reduced to its essentials the machine comprises a frame 7 having a projection 8 at the front, herein known as the reading plate. The reading plate has holes 9 arranged in two vertical rows of three holes each, corresponding with the positions of the dots in the foregoing imaginary oblong of the Braille system. Operable in these holes are the plungers 10, 11, 12, 13, 14, 15 of as many electro-magnets suitably mounted beneath the reading plate.

All of the electro-magnets are alike, and the description of the first one will suffice. In Figure 4 the plunger 10 slides in the brass or other non-magnetic sleeve 16 situated within the tubular core 17 of the electro-magnet 18. The core is of magnetic material, and upon energization of the electro-magnet the armature 19 of the plunger 10

will be attracted, causing raising of the plunger in the hole 9 and projection of the button or cap 20 of the plunger above the surface of the reading plate. The sleeve 16 projects slightly below the core 17, stopping the armature 19 and preventing sticking thereof to the magnetic core 17. The button 20 is larger than the plunger 10 and serves as a stop to prevent the dropping out of the plunger. The exposed surface of the button may be made either very smooth or very rough, or otherwise surfaced so that the particular plunger may be identified more readily.

A carriage 21 rides upon suitable bearings 22 on the frame 7. It is pulled to the left by the tape or ribbon 26 of a spring drum 24, which tape has connection with the carriage in the manner of known typewriter construction. The carriage progresses step by step to the left by the action of escapement mechanism (also shown in typewriter constructions) consisting of a ratchet 25 (Fig. 6) a pawl 26, a rocker 27 which carries the pawl and space bar mechanism.

The latter comprises a rocker element 28 (Figs. 1, 2 and 7) bell crank 29, connections 30 between the bell-cranks and the rocker element 28, and spaced bars 31 and 32 respectively situated at the left and right side of the reading plate 8. The operator may depress one or the other of the space bars 31 and 32 by one or more otherwise idle fingers of the hand or hands upon the reading plate, the successive depressions of the space bars permitting the carriage 21 to move step by step across the frame so that the various letter-perforations of the code (Fig. 10) may successively pass a predetermined point for the purpose of causing operation of the reading plate plungers. This intermittent or step by step movement causing intermittent operation of the reading plungers permits the operator to increase or decrease the intervals between successive operations of the reading plungers in proportion to his or her ability to read the code of characters and makes the machine adaptable to the ability or reading speed of the different operators using it.

Mounted upon the carriage 21 is a platen 33, in this instance in the shape of a roller. The platen may be made of metal but preferably is provided with a metal covering 34. This covering forms part of an electrical circuit, the platen being introduced in such circuit by means of a brush or other contactor 35 (Figs. 3 and 8) and a fixed set of spring or other contacts 36, 37, 38, 39, 40 and 41. These are suitably mounted upon an insulating block 42 fixedly secured at 43 upon the frame 7 and assuming a position in reference to the platen 33 corresponding with the printing point of the usual typewriter, this being the predetermined point mentioned before.

A second but rubber surfaced roller 44 is so mounted upon the carriage 21 in reference to the platen 33 that a paper or other sheet 45 may be inserted in the space between the two. The paper is fed forwardly by turning the platen 33 either by means of the knobs 46 at each end (Fig. 3), or by means of the more or less familiar ratchet and pawl mechanism 47 and 48 in Figure 5. The pawl is carried by a rocking arm 49 which has such connection with the lever 50 (Fig. 3) that when the latter is pressed upon from the left it not only returns the carriage 21 to the starting position but also turns the platen 33 and feeds the paper 45 one line forwardly or upwardly. The throw of the pawl 48 must be arranged to produce sufficient turning of the platen 43 to accomplish the purpose, but inasmuch as the manner of doing this is shown in typewriter constructions the details are not necessarily entered into here.

A roller 49 has the paper 45 wound thereon. The ends 50 of the roller are journaled in suitable bearings or brackets 51 forming part of the carriage 21. The paper is fed under a presser or idler roller 52 and the end is deposited in a basket or other suitable receptacle 53, also mounted upon the carriage, in which basket the paper may be folded over from time to time as it is unwound from the roller 49.

The sheet 45 will be perforated to agree with the code in Figure 10 to thereby form the letters of the word intended to be read through the sense of touch upon the fingerboard 8. The perforations (Fig. 10) extend in the vertical direction and occupy one or more positions in the six numbered rows, the numbering of the rows from 1 to 6 corresponding with the foregoing numbering of the dots in Figure 9.

In Figure 8 the first perforation 54 extends over two-sixths of the alloted vertical distance (Fig. 10) and represents the letter "B". The next perforations 55 and 56 occupy the first three-sixths of the vertical distance and the fifth row representing the letter "R". The next perforation 57 extends across the first row (Fig. 10) forming the letter "A" and so forth throughout the word "Braille".

A battery 58 or other source, supplies the electric current. One pole of the battery is connected with the contactor 35 by means of a wire 59. The other pole of the battery is connected by means of a wire 60 with one side of each of the six electro-magnets 18 beneath the reading board. A switch 61 is interposed in the wire 60 so that the current may be cut off when the apparatus is not in use. Wires 62, 63, 64, 65, 66 and 67 connect the remaining sides of the various electro-magnets with the various spring contacts 36, 37, etc. Passage of the paper 45 beneath the stationary spring contacts mentioned will permit the ends of the contacts to engage the metallic platen according to the extent of the various perfo-

rations so that one or more electrical circuits are closed through the various electro-magnets, causing raising of one or more of the plungers 10, 11, etc. in agreement with the number and position of the dots of the Braille letters.

Figure 11 illustrates a modification for use of the near-blind. The various plungers 10, 11, etc. are now substituted by lamps 68, 69, 70, 71, 72 and 73 which, according to the disclosure are electric, and in practice may have variously colored bulbs so that the various ones of the six positions of dots may be identified more easily. In order to take the position of the reading board, the six lamps may be framed by a suitable number of clear or frosted lamps 74 giving a white light and producing a white border around the signal lamps.

The border lights 74 are connected in parallel, and are supplied with current from the battery 58 by wires 75 and 76, the former having a switch 77 by which the border may be lighted or extinguished as may be desired. Otherwise the wiring is identical with that shown in Figure 8, corresponding numerals being employed without further description.

Figure 12 illustrates a further modification adapting the principles of the invention to blind or nearly blind and also to partially deaf persons, the signals consisting of three bells 78, 79 and 80, preferably of the single-stroke kind. These bells are so varied in pitch or tone that the ear can readily distinguish all three if sounded at once, the bell 78 being highest in pitch, the bell 79 intermediate and the bell 80 lowest.

Only three spring contacts 81, 82 and 83 are necessary to the circuit arrangement of the bells. The battery 84 has common connection at one pole with one side of each of the three bells by means of a wire 85. The remaining sides of the bells are connected with the three contacts mentioned by means of wires 86, 87 and 88. The contactor 89 which engages the metallic platen 90 has connection with the remaining pole of the battery through a wire 91. The ear cannot readily distinguish more than three independent sounds at one time and it is therefore necessary to modify the code in Figure 13 so that those letters of the Braille alphabet which have more than three dots may be divided so that the dots in the second vertical row may be offset from those in the first vertical row, producing impulses separated by very short intervals, or at least intervals shorter than those between letters themselves. The longer interval between letters is provided through the hand controlled "spacing" or intermittent step by step feed of successive "letter" areas of perforations. To illustrate: The letter "R" comprises dots 1, 2 and 3 in the first row and the dot 5 in the second row. This letter is therefore formed in the sheet 45 (Fig. 12) by making a long perforation 92 involving all three of the bells, and a single perforation 93 involving only the central bell (Fig. 9). The letter "I" involves the dot 2 in the first row and dot 4 in the second row (Fig. 9), the sheet 45 therefore being perforated at 93 (Fig. 12) to involve a central bell 79 and at 95 to involve the first bell 78. The letter "E" is represented by perforations 96 and 97 which will permit ringing of first the bell 78 then the bell 79 representing dots 1 and 5 (Fig. 9).

By offsetting the perforations as described, it is possible to make the one set of three bells do double duty, or take the place of the second row of plungers in Figure 8 or second row of lamps in Figure 11. The time elapsing between successive ringing of the bells and represented by the passage of the contact fingers 81—83 from one perforation as 92 to its complemental perforation 93, as the platen is moving, will indicate the first and second rows and the longer interval between successive hand-controlled step by step "spacing" or feed of successive letter areas, will separate the letters and prevent confusion. The bell 78 corresponds with dots 1 and 4 of the alphabet, the bell 79 with dots 2 and 5, and the bell 80 with dots 3 and 6.

The operation may be readily understood. The touch system, for totally blind persons is considered first. The sheet 45 is previously perforated to form letters and characters of the Braille alphabet, and is inserted in the translating machine between the platen 33 and rubber roller 44. The sheet may be as long as desired, and if sufficiently long will be wound upon a roller 49 to be mounted upon the carriage 41, from which roller the sheet is unwound from time to time and deposited in a suitable receptacle 53.

A set of six stationary spring contacts 36, 37, 38, 39, 40 and 41 occupy a position corresponding with the usual printing point of the typewriter. The platen 33 passes the contact point with a step by step motion upon operation of the space bar mechanism which consists mainly of the space bars 31 and 32, the pawl 26 and ratchet 29. The reader places his hands upon the reading board 8 in such manner that desired fingers take position upon the plungers, 10, 11, etc. certain remaining and idle fingers being used to depress one or the other of the space bars 31 and 32 after each character has been read.

Assume the first perforation 54 as having reached the contact position or point. The springs 36 and 37 engage the metal covering 34 of the platen whereupon current flows from one pole of the battery 58, over wire 59, contact bar 35, covering 34, contact 36 and 37, wires 62 and 63, the first two electro-magnets 18, and wire 60 to the other pole of the battery. The energization of the two electro-magnets auses raising of the plungers 10

and 11, producing two impulses agreeing with dots 1 and 2 in the letter "B" of the Braille alphabet (Fig. 9).

A depression of one or the other of the two spacing bars 31 and 32 will permit the carriage 21 to move sufficiently far to the left to bring the perforations 55 and 56 of the next character to the contact point. The circuits involving the electro-magnets of the plungers 10, 11, 12 and 14 are readily traced without description, the resulting impulses agreeing with dots 1, 2, 3 and 5 forming the letter "R" of the Braille alphabet. The modification in Figure 11 uses six electric lamps 68, 69, etc., preferably variously colored, in substitution for the foregoing six plungers. The same style of perforations is intended to be used and, if desired, the lamps of Figure 11 and the electro-magnets 18 of the first form may be connected in parallel so that the touch and sight system may be used in combination. It is deemed unnecessary to illustrate this combination because it is within the province of any electrician to combine the electro-magnets and lamps as proposed. The operation will be the same excepting of course that lamps will become lighted in place of plungers being raised, but in the case of the combination both lamps will be lighted and plungers will be raised simultaneously.

The modification in Figures 12 and 13 makes use of three bells which are successively lower in pitch, the code in Figure 13 having offset perforated components to suit those letters of the Braille alphabet which employ dots in the second vertical row of the imaginary outline. This arrangement will produce impulses of one or more of the three bells at short intervals, one illustration being sufficient to remind the reader of the operation which is set forth earlier in the description.

Take the letter "R": The perforation 92 (Fig. 12) will permit engagement of all three contacts 81, 82 and 83 with the metallic platen 90 so that all three bells 78, 79 and 80 are sounded simultaneously. The bells are preferably of single-tone variety. The perforation 93 immediately following, will permit engagement of the contact 82, only, therefore causing sounding of the bell 79. The first simultaneous sounding of all three bells agrees with dots 1, 2 and 3 (Figs. 9) in the first vertical row of the letter R while the single sounding of the bell 79 will agree with the second dot 5 in the second vertical row.

It is regarded as within the province of the invention to employ instruments other than bells, such instruments being capable of operation by electro-magnetic means. But bells offer the most practical means, both because of their loudness and availability. If desired, a number of reading plates, sets of bells or frames of lights may be introduced into the circuits to operate in different parts of a room, in different rooms or anywhere where it is desired to have them, it being proposed to operate all such devices from some central point.

While the construction and arrangement of the improved signaling system is that of a generally preferred form, obviously modifications and changes may be made without departing from the spirit of the invention or the scope of the claims.

I claim:—

1. Apparatus of the character described comprising a metallic platen having applicable thereto a sheet provided with parallel lines of perforations corresponding to a code of communication, a plurality of signaling devices by which the code is translated, a source of energy having one terminal connected with said platen and the other terminal connected with one side of each of said devices, a plurality of contacts fixed in position relatively to the platen respectively connected with the remaining sides of said devices and being in position to engage the platen through successive portions of a line of perforations in said sheet, manually operable means for effecting movement of the platen in one direction in respect to said contacts permitting successive engagement thereof with the platen through and according to the extent of the perforations in successive portions of the line of perforations to render corresponding signaling devices operative, and means for moving the platen in another direction to bring succeeding parallel lines of perforations in position for passage beneath the contacts.

2. Apparatus of the character described comprising a plurality of electrical signaling devices arranged in agreement with the position of the components of a code of communication, a metallic platen having applicable thereto a sheet provided with lines of perforations which perforations are varied in extent, a plurality of contacts respectively connected with one side of said devices fixed relatively to and engageable with the platen through perforations in said sheet, manually operable means to advance the platen past said contacts with a step by step motion permitting various contacts to engage the platen according to the extent of the perforations in successive portions of a line of perforations brought thereunder, and a source of current having one terminal connected with the platen and another terminal connected with the other side of said devices, energizing such number of the devices as agrees with the number of contacts permitted to engage the platen through the perforations.

3. Apparatus of the character described comprising a reading board having a plurality of holes arranged in agreement with the Braille code, a plurality of electro-magnetic

means each having elements movable in said holes, a metallic platen having applicable thereto a sheet containing a line of perforations of suitable extent and formation to involve determined components of said code, contacts equal in number to said devices being respectively connected with one side of the devices, manually operable means for effecting step by step movement of the platen past said contacts permitting one or more to engage the platen through and according to the position and extent of the perforations in successive portions of the line of perforations moved thereunder, and a source of energy having one terminal connected with the platen and the other terminal with the remaining sides of said devices, energizing the electro-magnetic means of the engaging contacts to move the respective plungers in the holes and thus reproduce components of said code.

4. Apparatus of the character described comprising a reading board having a plurality of holes arranged in agreement with the Braille code, electro-magnets having plungers extending into the holes, the ends normally being flush with one surface of the reading plate, a metallic platen to which is applicable a sheet having a line of perforations of an extent and location to involve components in the characters of said code, a plurality of contacts respectively connected with one side of said electro-magnets, manually operable means for effecting step by step movement of the platen past said contacts so that various ones engage the platen according to the extent and location of the perforations in successive portions of the line of perforations, and a source of energy connected with the platen and with the remaining side of said electro-magnets causing energization of the electro-magnet agreeing with said engaging contacts to project corresponding plungers above the surface of the reading board thereby reproducing the selected components of the Braille code.

5. Apparatus of the character described comprising a frame, a projecting portion on the frame having a plurality of holes constituting a reading board, electro-magnetic means mounted upon the reading board having plungers projecting into the holes and being flush with one surface of the reading board, the arrangement of the holes and plungers agreeing with the positions of the character-components of the Braille code, a carriage mounted upon the frame, a metallic platen and a rubber roller mounted upon the carriage receiving therebetween a sheet having a line of perforations of an extent and position to involve desired components of said code, a plurality of contacts fixed upon the carriage and respectively being connected with one side of the electro-magnetic means, means including a manually operable spacing bar situated beside the reading board for moving the carriage, platen and line of perforations on said sheet step by step past said contacts permitting engagement of certain contacts with the platen according to said extent and position of the perforations, and a source of energy connected with the platen and to the remaining side of said electro-magnetic means for completing electrical circuits to project certain plungers above the surface of the reading board thereby to reproduce the characters of said code.

6. Apparatus of the character described comprising a plurality of electrical signaling devices, a metallic platen, a source of electrical current having one terminal connected with the platen and the other terminal connected with one side of said devices, a sheet applied to the platen having a line of perforations therein corresponding to a code of communication, a series of contacts connected with the other side of said devices and engaging the platen as permitted by and according to the extent of the perforations to close electrical circuits through a corresponding number of said devices, and manually operable means for effecting intermittent and relative movement of said platen and series of contacts to bring successive portions of a line of perforations and said contacts into positions of cooperation.

7. Apparatus of the character described comprising a metallic platen, a sheet applied to the platen having perforations exposing portions of the platen beneath the sheet, electrical signaling devices, a source of current having one terminal connected with the platen and the other terminal connected with one side of said devices, contacting means each having connection with the other side of the respective devices and fixed in position relatively to the platen, and manually operable means for effecting intermittent movement of the platen past said contact means permitting engagement of the contact means with the platen through successive portions of a line of perforations to render the signaling devices operative.

JENS K. GRONDAHL.