Sept. 11, 1951 W. F. PFAU 2,567,397

SOLID FUEL FEEDING DEVICE

Filed Sept. 8, 1945 2 Sheets-Sheet 1

Fig. 1

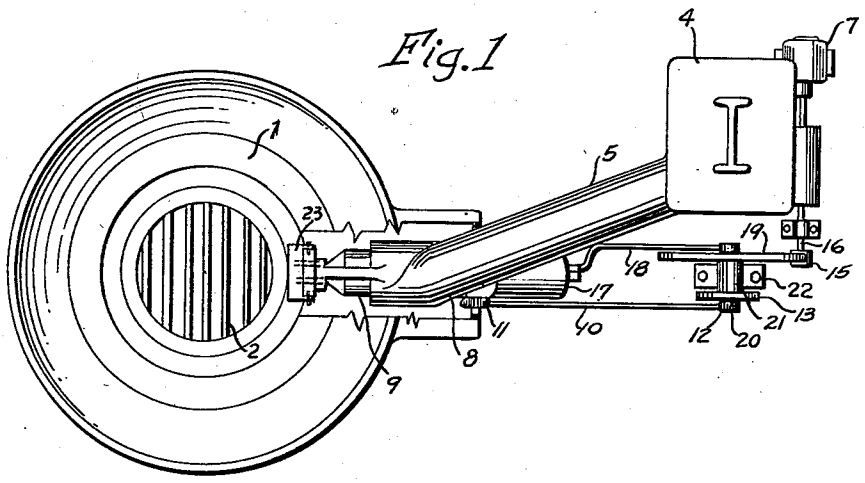

Fig. 2

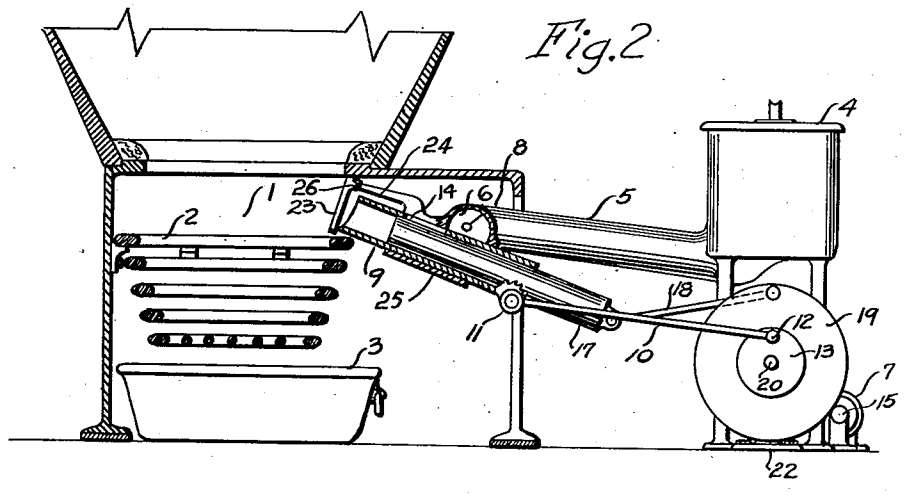

INVENTOR
William F. Pfau

BY
Albert F. Robinson
ATTORNEY

Sept. 11, 1951 W. F. PFAU 2,567,397

SOLID FUEL FEEDING DEVICE

Filed Sept. 8, 1945 2 Sheets-Sheet 2

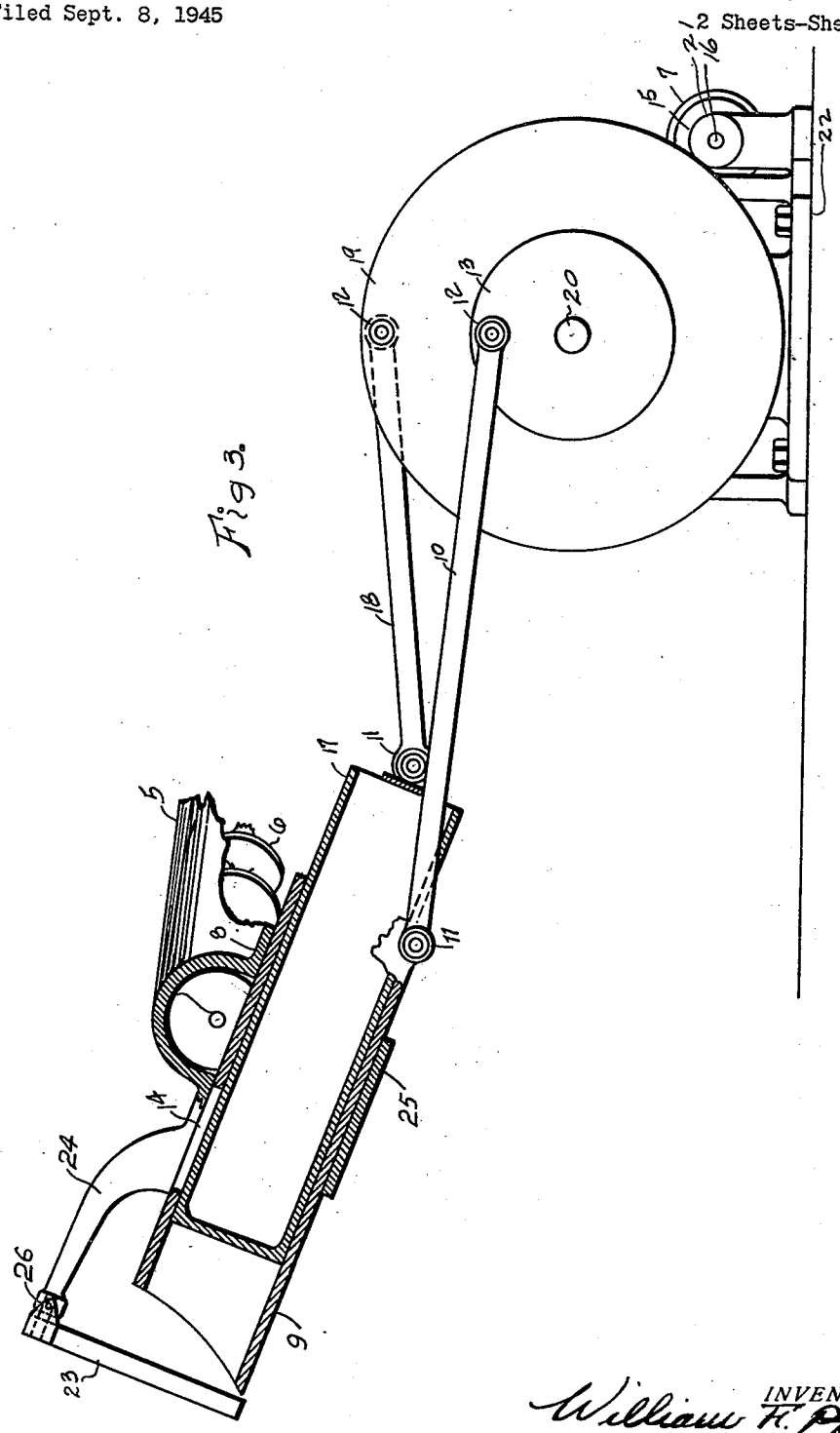

Fig 3.

INVENTOR
William F. Pfau

BY
Albert X. Robinson
ATTORNEY

Patented Sept. 11, 1951 2,567,397

UNITED STATES PATENT OFFICE

2,567,397

SOLID FUEL FEEDING DEVICE

William F. Pfau, Cincinnati, Ohio

Application September 8, 1945, Serial No. 615,189

5 Claims. (Cl. 198—82)

1

The invention relates to a solid fuel feed device for heaters, furnaces and other fuel burning means, and particularly pertains to a combination fuel supply line and means for forcing the fuel from the supply line into a grate burning structure or other combustion area in predetermining batches.

Generally described, the invention comprises a fuel feed line from a source of supply with a positive feed conveyor therein, such as a screw, for moving the fuel from the source of supply to a force feed, such as a plunger or pusher, which then forces the fuel into the combustion area after it is fed through the supply line by the conveyor to the pusher or plunger. The pusher or plunger is associated with a sleeve which together close the opening from the fuel supply line except when a supply of fuel from the supply line is being deposited into the sleeve in front of the plunger or pusher. After the fuel is in the hollow sleeve, the opening in the sleeve is closed and the fuel in the sleeve is moved by the plunger to the combustion area through the sleeve. The sleeve also reciprocates with the plunger or pusher to provide a conduit into the combustion area through which the fuel is fed. The sleeve and plunger or pusher are then retracted to receive another batch of fuel and to disconnect the sleeve from the combustion area and cut off heat radiation and the connection to the fuel supply while a batch of fuel is being placed in the sleeve. This separates the fuel and feeding mechanism from the radiation and/or heat transfer from the combustion area.

For a better understanding of the invention, reference is made to the accompanying drawing in which:

Fig. 1 is a top plan view of a device embodying the invention;

Fig. 2 is a side elevation of Fig. 1 with parts broken away; and

Fig. 3 is a detailed view.

Referring specifically to the drawings in which like numerals are used to designate like parts, numeral 1 is the bowl or fire box of a conventional furnace with a grate structure 2 therein above an ash receptacle 3. These are conventional elements of a furnace unit.

A hopper 4 is provided for carrying a supply of fuel, and leading from the bottom of the hopper to the furnace at the top of the grate is a conduit line 5 within which is a screw conveyor 6. The screw conveyor is driven by an electrical motor 7 and suitable driving connections between it and the conveyor.

2

In a chamber of the support housing 25 of the member 8 near the discharge end of the conveyor, there is mounted a sleeve 9, preferably cylindrical and open adjacent both ends, reciprocating within the chamber and actuated by a rod 10 pivotally connected to it at one end 11 and at the end 12 to an eccentric 13. A recess 14 is provided in the wall of the cylindrical sleeve 9. The eccentric is driven by any suitable device, such as a frictional drive 15 on the end of a shaft 16 which extends from the motor 7 to engage with the periphery of another eccentric 19 which is mounted with the eccentric 13 on a common shaft as hereinafter described.

A pusher or plunger 17 is mounted in the cylindrical sleeve and is reciprocated by a rod 18 pivotally connected at one end of the pusher or plunger and at the opposite end to said other eccentric 19. The two eccentrics are preferably a unit connected by the common shaft 20 journaled in hub 21 on the base 22.

A hinged closure 23 is provided adjacent the place where the fuel is discharged from the end of the sleeve 9 into the combustion area. The closure may be hinged to a fixed part of the fuel feed unit, such as an arm 24 extending from a part of the feeding unit. This closure is adapted to swing away from the opening as the hollow sleeve and pusher are moved adjacent thereto and as the fuel is pushed by the plunger through the opening into the furnace from the hollow sleeve. The fuel which is fed through the opening into the combustion chamber opens the closure, which, of course, swings shut by gravity when the fuel is not being fed through the opening. The hollow sleeve and pusher are then retracted to bring the recess in the hollow sleeve in registration with the discharge end of the fuel line, and the pusher or plunger is drawn back to permit the cylindrical sleeve to be supplied again with another batch of fuel from the feed line. The closure swings back to close the opening into the furnace when the sleeve and pusher or plunger are retracted to refilling position. When the sleeve is retracted there is a substantially wide space between the combustion area and the end of the sleeve. Therefore, the fuel and feeding mechanism are well separated and spaced from the combustion area so as not to be affected by the radiation and/or transfer of heat from the combustion area. Otherwise the heat would soften the fuel and cause the volatile contents of the fuel to flow and vaporize, thereby preventing proper functioning of the fuel feed and mechanism. This action would be prevalent, par-

ticularly with highly volatile fuels. Therefore, this novel mechanism will permit using higher volatile fuels which could not be used successfully heretofore where small mechanical feed devices were operating. The closure **23** is hinged by a conventional hinge **26**.

The grate structure may be of any construction with the ash receptacle therebeneath to receive the ashes as the fuel is burned in the grate and sifts therethrough into the receptacle.

While I have shown and described one embodiment typifying the invention, it will be understood there may be various changes in details of construction without departing from the spirit of the invention.

I claim:

1. A solid fuel feed device for feeding fuel from a source of supply directly into the combustion chamber of a furnace comprising a sleeve provided with a fuel receiving recess therein and having one end disposed to discharge fuel into the combustion chamber, a conveyor for feeding fuel from the supply source into the fuel recess of the sleeve, a pusher within the sleeve and said pusher and sleeve being reciprocable one to another for discharging the fuel from said sleeve into the combustion chamber, and means for reciprocating the sleeve and pusher relatively to each other for collecting the fuel from the conveyor and discharging it into the combustion chamber of the furnace.

2. A solid fuel feed device of the construction set forth in claim 1 including a hinged closure, between the furnace combustion chamber and the sleeve, that is adapted to be opened from a normally closed position by the fuel in being discharged from the sleeve into the combustion chamber.

3. A solid fuel feed device of the construction set forth in claim 1 in which the means for reciprocating the sleeve and pusher includes eccentric means.

4. A solid fuel feed device for feeding fuel from a source of supply directly into the combustion chamber of a furnace comprising a screw conveyor operating within a conduit leading from the fuel supply source, a sleeve having a feed opening in which fuel is received from the screw conveyor to be discharged through said sleeve to the combustion chamber, a plunger within the sleeve and said plunger and sleeve being reciprocable one to another, and means for reciprocating the sleeve and plunger relatively to each other for receiving a batch of fuel in said sleeve from the conveyor and discharging it into the combustion chamber.

5. A solid fuel feed device for feeding fuel from a source of supply directly to the combustion chamber of a furnace as set forth in claim 4 including a hinged closure between the combustion chamber and the sleeve which is adapted to be opened from a normally closed position by the fuel in being discharged from the sleeve into the combustion chamber.

WILLIAM F. PFAU.

REFERENCES CITED

The following references are of record in the file of this patent:

UNITED STATES PATENTS

Number	Name	Date
209,227	Chapin	Oct. 22, 1878
768,127	Jaques	Aug. 23, 1904
1,054,464	Soucek	Feb. 25, 1913
2,004,533	Maynard	June 11, 1935
2,388,805	Stahl	Nov. 13, 1945