O. HULTGREN.

TYPE WRITING MACHINE.

APPLICATION FILED JUNE 12, 1914.

1,199,383. Patented Sept. 26, 1916.

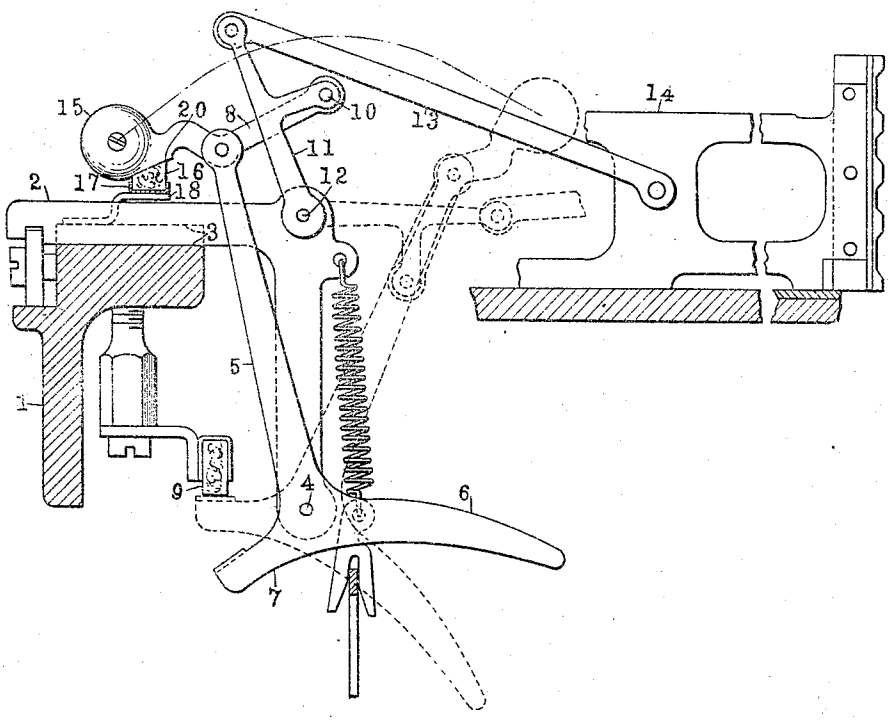

WITNESSES:

C. F. Volk

Jesse A. Holton

INVENTOR

O. Hultgren

BY

Duell Warfield & Duell

ATTORNEY

UNITED STATES PATENT OFFICE.

OTTO HULTGREN, OF BRIDGEPORT, CONNECTICUT, ASSIGNOR TO THE NOISELESS TYPEWRITER COMPANY, OF MIDDLETOWN, CONNECTICUT, A CORPORATION OF CONNECTICUT.

TYPE-WRITING MACHINE.

1,199,383. Specification of Letters Patent. Patented Sept. 26, 1916.

Application filed June 12, 1914. Serial No. 844,610.

To all whom it may concern:

Be it known that I, OTTO HULTGREN, a subject of the King of Sweden, residing at Bridgeport, in the county of Fairfield and State of Connecticut, have invented certain new and useful Improvements in Type-Writing Machines, of which the following is a full, clear, and exact description, such as will enable others skilled in the art to which it appertains to make and use the same.

This invention relates to typewriting machines, and with regard to certain more specific features thereof, to stops adapted to silently arrest the movement of a moving part.

One of the objects of the present invention is to provide a simple and inexpensive stop of the above character adapted to prevent rebounding of the arrested member.

Another object is to provide a practical stop of the above character particularly adapted to coact with a moving part of the type action which will be efficient in operation.

Other objects will be in part obvious and in part pointed out hereinafter.

The invention accordingly consists in the features of construction, combinations of elements and arrangement of parts which will be exemplified in the construction hereinafter set forth, and the scope of the application of which will be indicated in the following claims.

In the accompanying drawing, wherein is shown one of various possible embodiments of this invention, there is shown in elevation a portion of a type action with the parts in their normal position of rest.

The present invention will hereinafter be described with relation to its application to the type action of the "noiseless typewriting machine," although it is to be understood that it is applicable to other forms of machines and in other relations.

In the accompanying drawing, 1 denotes the front wall of the frame of the machine, upon which the type actions, only one of which is herein shown, are supported in a radially disposed relation with respect to a common printing point. Each type action in the present case includes an adjustable L-shaped bracket 2, mounted in a groove 3 in the top of the front wall 1. Pivotally supported at 4, at the lower part of the bracket 2 is a bell-crank lever having an upwardly extending arm 5, a rearwardly extending arm 6 and a forwardly extending arm 7. The arm 6 is designed to be actuated by a key-lever, not shown, but mounted therebeneath to swing the upper arm 5 rearwardly. The arm 7 coacts with an adjustably mounted pad 9 suspended from the front wall 1.

At the upper part of the arm 5 is a link 8 pivoted intermediate its ends. Its rear end is connected at the point 10 with a T-shaped link 11, one end of which is pivoted at 12 to the bracket 2, while its opposite end is pivotally connected with a link 13 connected with the type carrier 14. The opposite end of the link 8 carries a momentum accumulator weight 15, which is adapted to urge the type into engagement with the platen after the downward movement of the key-lever has been arrested. As this form of type action is fully described in the co-pending application of Nils H. Anderson, for improvements in typewriting machines, filed August 6, 1913, Serial No. 783,331, a further discussion thereof is believed to be unnecessary. This momentum accumulator weight has a peculiar path of travel, for it not only has a swinging action about the point 4 when moving to the position shown in dotted lines, but also has an independent pivotal movement about its central pivot point of connection with the bell-crank lever. Its center therefore follows the dotted line connecting the full and dotted positions of these two parts, and this curve is, so far as its effective portion herein shown is concerned, of a hyperbolic character, that is, its ends tend to approach straight lines. In order to silently arrest the movement of this weight on its return to normal position, there is provided a cushion 16 of leather, felt or other suitable semi-resilient material. This cushion is mounted in a channel support 17, which is curved to conform with the radially disposed position of the type actions and is supported on brackets 18 secured at intervals in any desired manner to the front wall of the machine.

It will be noted from the drawing that the upper surface of the cushion 16 is inclined at a slight angle with respect to the horizontal, and parallel to the under surface 20 of the momentum accumulator weight 15 when in normal position. This upper sur-

face of the cushion 16 is also disposed at a slight angle with respect to the end of the path of travel of the center of the momentum accumulator weight 15, and, as herein shown, is approximately fifteen degrees, which is sufficient to prevent wedging of the parts. The object of this construction is to silently arrest the return movement of the accumulator weight and positively prevent any rebounding thereof. The latter portion of the return movement of the weight 15 to normal inactive position is substantially a straight line, and as the weight approaches the cushion at a very small angle of incidence, the weight and type action will be brought to rest quietly and without rebound.

As the operation of this device is believed to be clear from the above description, a further discussion thereof is thought to be unnecessary.

It is thus seen that the present invention provides a simple and practical stop which is efficient and reliable in use in silently bringing the movable part to rest.

As many changes could be made in the above construction and many apparently widely different embodiments of this invention could be made without departing from the scope thereof, it is intended that all matter contained in the above description or shown in the accompanying drawings shall be interpreted as illustrative and not in a limiting sense.

Having described my invention, what I claim as new and desire to secure by Letters Patent is:

1. In a typewriting machine, in combination, a type action including a pivotally movable member having a final path of travel which approaches a straight line, and a cushioned stop therefor arranged on the side thereof toward its axis, said stop having an active surface disposed at an angle of substantially fifteen degrees to the final path of travel of said member.

2. In a typewriting machine, in combination, a type action including a pivoted lever, a weight pivoted thereto, and a cushioned stop for said weight having an active surface disposed at substantially a right angle to the pivotal movement thereof about its own axis, and at an acute angle to the pivotal movement thereof about the axis of said lever.

In testimony whereof I affix my signature, in the presence of two witnesses.

OTTO HULTGREN.

Witnesses:
C. M. NEWMAN,
NILS H. ANDERSON.