(12) INTERNATIONAL APPLICATION PUBLISHED UNDER THE PATENT COOPERATION TREATY (PCT)

(19) World Intellectual Property Organization
International Bureau

(43) International Publication Date
18 September 2014 (18.09.2014)

WIPO | PCT

(10) International Publication Number
WO 2014/143488 A1

(51) International Patent Classification:
A61F 13/00 (2006.01) *A61M 1/00* (2006.01)
A61F 13/02 (2006.01) *A61M 27/00* (2006.01)

(21) International Application Number:
PCT/US2014/016320

(22) International Filing Date:
13 February 2014 (13.02.2014)

(25) Filing Language: English

(26) Publication Language: English

(30) Priority Data:
61/782,385 14 March 2013 (14.03.2013) US

(71) Applicant: **KCI LICENSING, INC.** [US/US]; Legal Department- Intellectual Property, P.O. Box 659508, San Antonio, TX 78265-9508 (US).

(72) Inventors: **LOCKE, Christopher, Brian**; 6 Bosworth Mews, Bournemouth, Dorset BH9 3SD (GB). **ROBINSON, Timothy, Mark**; 27 Wellington Terrace, Basingstoke, Hampshire RG23 8HH (GB). **COULTHARD, Richard Daniel, John**; 6 Acorn Way, Verwood, Dorset BH31 6LL (GB).

(74) Agents: **WELCH, Gerald T.** et al.; SNR Denton US LLP, P.O. Box 061080, Wacker Drive Station, Willis Tower, Chicago, IL 60606 (US).

(81) Designated States *(unless otherwise indicated, for every kind of national protection available)*: AE, AG, AL, AM, AO, AT, AU, AZ, BA, BB, BG, BH, BN, BR, BW, BY, BZ, CA, CH, CL, CN, CO, CR, CU, CZ, DE, DK, DM, DO, DZ, EC, EE, EG, ES, FI, GB, GD, GE, GH, GM, GT, HN, HR, HU, ID, IL, IN, IR, IS, JP, KE, KG, KN, KP, KR, KZ, LA, LC, LK, LR, LS, LT, LU, LY, MA, MD, ME, MG, MK, MN, MW, MX, MY, MZ, NA, NG, NI, NO, NZ, OM, PA, PE, PG, PH, PL, PT, QA, RO, RS, RU, RW, SA, SC, SD, SE, SG, SK, SL, SM, ST, SV, SY, TH, TJ, TM, TN, TR, TT, TZ, UA, UG, US, UZ, VC, VN, ZA, ZM, ZW.

(84) Designated States *(unless otherwise indicated, for every kind of regional protection available)*: ARIPO (BW, GH, GM, KE, LR, LS, MW, MZ, NA, RW, SD, SL, SZ, TZ, UG, ZM, ZW), Eurasian (AM, AZ, BY, KG, KZ, RU, TJ, TM), European (AL, AT, BE, BG, CH, CY, CZ, DE, DK, EE, ES, FI, FR, GB, GR, HR, HU, IE, IS, IT, LT, LU, LV, MC, MK, MT, NL, NO, PL, PT, RO, RS, SE, SI, SK, SM, TR), OAPI (BF, BJ, CF, CG, CI, CM, GA, GN, GQ, GW, KM, ML, MR, NE, SN, TD, TG).

Published:

— *with international search report (Art. 21(3))*

(54) Title: ABSORBENT DRESSING WITH HYBRID DRAPE

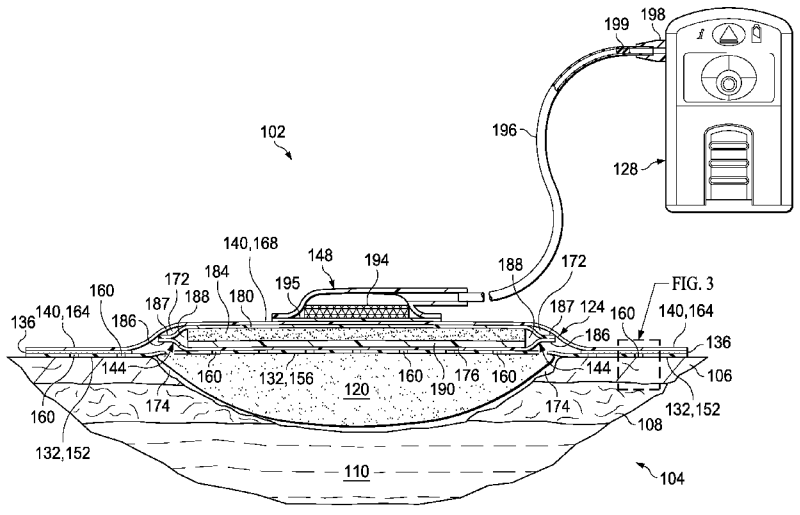

FIG. 1

FIG. 3

(57) Abstract: A dressing may be suitable for use with systems treating a tissue site Embodiments of the dressing may include a base layer, an adhesive, a sealing member, a first wicking layer, a second wicking layer, and an absorbent layer. The base layer may have a plurality of apertures and may be adapted to cover the tissue site. The adhesive may be positioned between the sealing member and the base layer such that the sealing member and the base layer define an enclosure. The first and the second wicking layer may each be disposed in the enclosure with the absorbent layer positioned between the first and the second wicking layer. Other dressings and systems arec disclosed.

WO 2014/143488 A1

ABSORBENT DRESSING WITH HYBRID DRAPE

RELATED APPLICATION

[0001] This application claims the benefit, under 35 USC § 119(e), of the filing of U.S. Provisional Patent Application serial number 61/782,385, entitled "ABSORBENT DRESSING WITH HYBRID DRAPE," filed March 14, 2013, which is incorporated herein by reference for all purposes.

FIELD

[0002] This disclosure relates generally to medical treatment systems and, more particularly, but not by way of limitation, to absorbent dressings, systems, and methods for treating a tissue site.

BACKGROUND

[0003] Depending on the medical circumstances, reduced pressure may be used for, among other things, reduced-pressure therapy to encourage granulation at a tissue site, draining fluids at a tissue site, closing a wound, reducing edema, promoting perfusion, and fluid management. Common dressings, systems, and methods may be susceptible to leaks and blockage that can cause a reduction in the efficiency of the therapy, or a complete loss of therapy. Such a situation can occur, for example, if the amount of fluid in the dressing or system exceeds the fluid capacity of the dressing or system. Prevention of leaks and blockages may be particularly important when only a limited power supply to the reduced pressure source and other components is available. Thus, improvements to dressings, systems, and methods that enhance the management of fluid extracted from a tissue site for increasing reliability, efficiency, and the useable life of the dressing and system are desirable.

SUMMARY

[0004] Shortcomings with certain aspects of tissue treatment dressings, systems, and methods are addressed as shown and described in a variety of illustrative, non-limiting embodiments herein.

[0005] In one embodiment, provided is a system for treating a tissue site that may include an interface manifold, a dressing, and a reduced-pressure source. The interface manifold may be adapted to be positioned proximate the tissue site. The dressing may include a base layer, an adhesive, a sealing member, a first wicking layer, a second wicking layer, an absorbent layer, and a conduit interface. The base layer may have a periphery surrounding a central portion and a plurality of apertures disposed through the periphery and the central portion. The base layer may be adapted to cover the interface manifold and tissue surrounding the tissue site. The adhesive may be in fluid communication with the apertures in the periphery of the base layer. The sealing member may have a periphery and a central portion. The periphery of the sealing member may be positioned proximate the periphery of the base layer such that the central portion of the sealing member and the central portion of the base layer define an enclosure. The first wicking layer and the second wicking layer may each be disposed in the enclosure. The absorbent layer may be disposed between the first wicking layer and the second wicking layer. The conduit interface may be positioned proximate to the sealing member and in fluid communication with the enclosure. The reduced-pressure source may be adapted to be coupled in fluid communication with the conduit interface to provide reduced pressure to the dressing.

[0006] In another embodiment, provided is a dressing for treating a tissue site that may include a base layer, an adhesive, a sealing member, a first wicking layer, a second wicking layer, an absorbent layer, and a conduit interface. The base layer may have a periphery surrounding a central portion and a plurality of apertures disposed through the periphery and the central portion. The base layer may be adapted to cover the tissue site and tissue surrounding the tissue site. The adhesive may be in fluid communication with the apertures in the base layer. The sealing member may have a periphery and a central portion. The periphery of the sealing member may be positioned proximate the periphery of the base layer such that the central portion of the sealing member and the central portion of the base layer define an enclosure. The first wicking layer and the second wicking layer may each be disposed in the enclosure. The absorbent layer may be positioned in fluid communication

between the first wicking layer and the second wicking layer. A peripheral portion of the first wicking layer may be coupled to a peripheral portion of the second wicking layer providing a wicking layer enclosure that may surround the absorbent layer between the first and the second wicking layer. The conduit interface my be positioned proximate to the sealing member and in fluid communication with the enclosure.

[0007] In another embodiment, provided is a system for treating a tissue site that may include an interface manifold, a dressing, and a reduced-pressure source. The interface manifold may be adapted to be positioned proximate the tissue site and to distribute reduced pressure to the tissue site. The dressing may be adapted to provide reduced pressure to the interface manifold and to store fluid extracted from the tissue site through the interface manifold. The dressing may include a base layer, an adhesive, a sealing member, a first wicking layer, a second wicking layer, an absorbent layer, and a conduit interface. The base layer may have a periphery surrounding a central portion and a plurality of apertures disposed through the periphery and the central portion. The central portion of the base layer may be adapted to be positioned proximate the interface manifold, and the periphery of the base layer may be adapted to be positioned proximate the tissue surrounding the tissue site. Further, the periphery of the base layer may be adapted to surround the interface manifold, and the apertures in the base layer may be adapted to be in fluid communication with the interface manifold and the tissue surrounding the tissue site. The adhesive may be in fluid communication with the apertures in the base layer. Further, the adhesive may be adapted to be in fluid communication with the tissue surrounding the tissue site through the apertures in the base layer. The sealing member may have a periphery and a central portion. The periphery of the sealing member may be positioned proximate the periphery of the base layer such that the central portion of the sealing member and the central portion of the base layer define an enclosure. The first wicking layer and the second wicking layer may each be disposed in the enclosure. The absorbent layer may be positioned in fluid communication between the first wicking layer and the second wicking layer. The conduit interface may be positioned proximate to the sealing member and in fluid communication with the enclosure. The reduced-pressure source may be adapted to be coupled in fluid communication with the conduit interface to provide reduced pressure to the dressing.

[0008] Other aspects, features, and advantages of the illustrative embodiments will become apparent with reference to the drawings and detailed description that follow.

BRIEF DESCRIPTION OF THE DRAWINGS

[0009] A more complete understanding of this specification may be obtained by reference to the following detailed description when taken in conjunction with the accompanying drawings wherein:

[0010] FIG. 1 is a cut-away view of an illustrative embodiment of a system for treating a tissue site depicting an illustrative embodiment of a dressing deployed at a tissue site;

[0011] FIG. 2 is a cut-away view of the dressing of FIG. 1;

[0012] FIG. 3 is detail view taken at reference FIG. 3, depicted in FIG. 1, illustrating the dressing of FIG. 1 positioned proximate tissue surrounding the tissue site;

[0013] FIG. 4 is a cut-away view of an illustrative embodiment of a fluid management assembly according to the dressing and system of FIG. 1;

[0014] FIG. 5 is a cut-away view of an illustrative embodiment of a fluid management assembly according to the dressing and system of FIG. 1;

[0015] FIG. 6 is a cut-away view of an illustrative embodiment of a conduit interface depicted in the dressing of FIG. 1; and

[0016] FIG. 7 is a cut-away view of another illustrative embodiment of a fluid management assembly suitable for use with the dressing and system of FIG. 1.

DETAILED DESCRIPTION OF ILLUSTRATIVE EMBODIMENTS

[0017] In the following detailed description of non-limiting, illustrative embodiments, reference is made to the accompanying drawings that form a part hereof. Other embodiments may be utilized, and logical, structural, mechanical, electrical, and chemical changes may be made without departing from the scope of this specification. To avoid detail not necessary to enable those skilled in the art to practice the embodiments described herein, the description may omit certain information known to those skilled in the art. The following detailed description is provided without limitation and with the scope of the illustrative embodiments being defined by the appended claims.

[0018] Referring to the drawings, FIG. 1 depicts an embodiment of a system 102 for treating a tissue site 104 of a patient. The tissue site 104 may extend through or otherwise involve an epidermis 106, a dermis 108, and a subcutaneous tissue 110. The tissue site 104 may be a sub-surface tissue site as depicted in FIG. 1 that extends below the surface of the epidermis 106. Further, the tissue site 104 may be a surface tissue site (not shown) that predominantly resides on the surface of the epidermis 106. The system 102 may provide therapy to, for example, the epidermis 106, the dermis 108, and the subcutaneous tissue 110, regardless of the positioning of the system 102 or the type of tissue site. The system 102 may also be utilized without limitation at other tissue sites.

[0019] Further, the tissue site 104 may be the bodily tissue of any human, animal, or other organism, including bone tissue, adipose tissue, muscle tissue, dermal tissue, vascular tissue, connective tissue, cartilage, tendons, ligaments, or any other tissue. Treatment of tissue site 104 may include removal of fluids, *e.g.*, exudate or ascites. As used herein, unless otherwise indicated, "or" does not require mutual exclusivity.

[0020] Continuing with FIG. 1, the system 102 may include an interface manifold 120, a dressing 124, and a reduced-pressure source 128. The interface manifold 120 may be adapted to be positioned proximate the tissue site 104, such as, for example, by cutting or otherwise shaping the interface manifold 120 in any suitable manner to fit the tissue site 104. As described below, the interface manifold 120 may be adapted to be positioned in fluid communication with the tissue site 104 to distribute reduced pressure to the tissue site 104. In one embodiment, the interface manifold 120 may be positioned in contact with the tissue site 104. The interface manifold 120 may be formed from any manifold material or flexible bolster material that provides a vacuum space, or treatment space, such as, for example, a

porous and permeable foam or foam-like material, a member formed with pathways, a graft, or a gauze, etc. As a more specific, non-limiting example, the interface manifold 120 may be a reticulated, open-cell polyurethane or polyether foam that allows good permeability of fluids while under a reduced pressure. One such foam material is the VAC® GranuFoam® material available from Kinetic Concepts, Inc. (KCI) of San Antonio, Texas. Any material or combination of materials may be used as a manifold material for the interface manifold 120 provided that the manifold material is operable to distribute reduced pressure. The term "manifold" as used herein generally refers to a substance or structure that is provided to assist in applying reduced pressure to, delivering fluids to, or removing fluids from a tissue site. A manifold typically includes a plurality of flow channels or pathways. The plurality of flow channels may be interconnected to improve distribution of fluids provided to and removed from the area of tissue around the manifold. Examples of manifolds may include, without limitation, devices that have structural elements arranged to form flow channels, cellular foam, such as open-cell foam, porous tissue collections, and liquids, gels, and foams that include or cure to include flow channels.

[0021] A material with a higher or lower density than GranuFoam® material may be desirable for the interface manifold 120 depending on the application. Among the many possible materials, the following may be used: GranuFoam® material, Foamex® technical foam (www.foamex.com), a molded bed of nails structures, a patterned grid material such as those manufactured by Sercol Industrial Fabrics, 3D textiles such as those manufactured by Baltex of Derby, U.K., a gauze, a flexible channel-containing member, a graft, etc. In some instances, ionic silver may be desirable to add to the foam by, for example, a micro bonding process. Other substances, such as anti-microbial agents, may be added to the foam as well.

[0022] In one embodiment, the interface manifold 120 may comprise a porous, hydrophobic material. The hydrophobic characteristics of the interface manifold 120 may prevent the interface manifold 120 from directly absorbing fluid, such as exudate, from the tissue site 104, but allow the fluid to pass through.

[0023] Continuing with FIG. 1, the dressing 124 may be adapted to provide reduced pressure from the reduced-pressure source 128 to the interface manifold 120, and to store fluid extracted from the tissue site 104 through the interface manifold 120. The dressing 124 may include a base layer 132, an adhesive 136, a sealing member 140, and a fluid management assembly 144. The dressing 124 may also include a conduit interface 148.

[0024] Referring to FIGS. 1-3, the base layer 132 may have a periphery 152 surrounding a central portion 156 and a plurality of apertures 160 disposed through the periphery 152 and the central portion 156. The base layer 132 may cover the interface manifold 120 and tissue surrounding the tissue site 104 such that the central portion 156 of the base layer 132 is positioned proximate the interface manifold 120 and the periphery 152 of the base layer 132 is positioned proximate the tissue surrounding the tissue site 104. In this manner, the periphery 152 of the base layer 132 may surround the interface manifold 120. Further, the apertures 160 in the base layer 132 may be in fluid communication with the interface manifold 120 and the tissue surrounding the tissue site 104.

[0025] The apertures 160 in the base layer 132 may have any shape, such as, for example, circles, squares, stars, ovals, polygons, slits, complex curves, rectilinear shapes, triangles, or other shapes. Each aperture 160 of the plurality of apertures 160 may have a diameter. The diameter of each of the apertures 160 may be between about 6 mm to about 50 mm. The apertures 160 may have a uniform pattern or may be randomly distributed on the base layer 132. The size and configuration of the apertures 160 may be designed to control the adherence of the dressing 124 to the epidermis 106 as described below.

[0026] The base layer 132 may be a soft material suitable for providing a fluid seal with the tissue site 104 as described herein. For example, the base layer 132 may comprise a silicone gel, a soft silicone, hydrocolloid, hydrogel, polyurethane gel, polyolefin gel, hydrogenated styrenic copolymer gels, a foamed gel, a soft closed cell foam such as polyurethanes and polyolefins coated with an adhesive, polyurethane, polyolefin, or hydrogenated styrenic copolymers. The base layer may have a thickness between about 500 microns (μm) and about 1000 microns (μm). In one embodiment, the base layer 132 has a stiffness between about 5 Shore OO and about 80 Shore OO. The base layer 132 may be comprised of hydrophobic or hydrophilic materials.

[0027] In some embodiments, the base layer 132 may be a hydrophobic-coated material. For example, the base layer 132 may be formed by coating a spaced material, such as, for example, woven, nonwoven, molded, or extruded mesh with a hydrophobic material. The hydrophobic material for the coating may be a soft silicone, for example. In this manner, the adhesive 136 may extend through openings in the spaced material analogous to the apertures 160 described herein.

[0028] The adhesive 136 may be in fluid communication with the apertures 160 in at least the periphery 152 of the base layer 132. In this manner, the adhesive 136 may be in

fluid communication with the tissue surrounding the tissue site 104 through the apertures 160 in the base layer 132. As shown in FIG. 3, the adhesive 136 may extend through the plurality of apertures 160 to contact the epidermis 106 for securing the dressing 124 to, for example, the tissue surrounding the tissue site 104. The apertures 160 may provide sufficient contact of the adhesive 136 to the epidermis 106 to secure the dressing 124 about the tissue site 104. However, the configuration of the apertures 160 and the adhesive 136 may permit release and repositioning of the dressing 124 about the tissue site 104.

[0029] The adhesive 136 may be any medically-acceptable adhesive. For example, the adhesive 136 may comprise an acrylic adhesive, rubber adhesive, high-tack silicone adhesive, polyurethane, or other adhesive substance. In some embodiments, the adhesive 136 may be a pressure-sensitive adhesive comprising an acrylic adhesive with coating weight of 15 grams/m^2 (gsm) to 70 grams/m^2 (gsm). The adhesive 136 may be a continuous or a discontinuous layer of material. Discontinuities in the adhesive 136 may be provided by apertures (not shown) in the adhesive 136. The apertures in the adhesive 136 may be formed after application of the adhesive 136 or by coating the adhesive 136 in patterns on a carrier layer, such as, for example, a side of the sealing member 140 adapted to face the epidermis 106. Further, the apertures in the adhesive 136 may be sized to control the amount of the adhesive 136 extending through the apertures 160 in the base layer 132 to reach the epidermis 106. The apertures in the adhesive 136 may also be sized to enhance the Moisture Vapor Transfer Rate (MVTR) of the dressing 124.

[0030] Factors that may be utilized to control the adhesion strength of the dressing 124 may include the diameter and number of the apertures 160 in the base layer 132, the thickness of the base layer 132, the thickness and amount of the adhesive 136, and the tackiness of the adhesive 136. An increase in the amount of the adhesive 136 extending through the apertures 160 generally corresponds to an increase in the adhesion strength of the dressing 124. A decrease in the thickness of the base layer 132 generally corresponds to an increase in the amount of adhesive 136 extending through the apertures 160. Thus, the diameter and configuration of the apertures 160, the thickness of the base layer 132, and the amount and tackiness of the adhesive utilized may be varied to provide a desired adhesion strength for the dressing 124. For example, the thickness of the base layer 132 may be about 200 microns. The adhesive layer 136 may have a thickness of about 30 microns. Further, the adhesive layer 136 may have a tackiness of about 2000 grams per 25 centimeter wide strip. The diameter of the apertures 160 in the base layer 132 may be about 7 millimeters.

[0031] Continuing with FIGS. 1-3, the sealing member 140 may have a periphery 164 and a central portion 168. The periphery 164 of the sealing member 140 may be positioned proximate the periphery 152 of the base layer 132 such that the central portion 168 of the sealing member 140 and the central portion 156 of the base layer 132 define an enclosure 172. The adhesive 136 may be positioned at least between the periphery 164 of the sealing member 140 and the periphery 152 of the base layer 132. The sealing member 140 may cover the tissue site 104 to provide a fluid seal and a sealed space 174 between the tissue site 104 and the sealing member 140 of the dressing 124. Further, the sealing member 140 may cover tissue, such as a portion of the epidermis 106, surrounding the tissue site 104 to provide the fluid seal between the sealing member 140 and the tissue site 104.

[0032] The sealing member 140 may be formed from any material that allows for a fluid seal. A fluid seal may be a seal adequate to maintain reduced pressure at a desired site given the particular reduced pressure source or system involved. The sealing member 140 may comprise, for example, one or more of the following materials: hydrophilic polyurethane; cellulosics; hydrophilic polyamides; polyvinyl alcohol; polyvinyl pyrrolidone; hydrophilic acrylics; hydrophilic silicone elastomers; an INSPIRE 2301 material from Expopack Advanced Coatings of Wrexham, United Kingdom having, for example, an MVTR (inverted cup technique) of 14400 $g/m^2/24$ hours and a thickness of about 30 microns; a thin, uncoated polymer drape; natural rubbers; polyisoprene; styrene butadiene rubber; chloroprene rubber; polybutadiene; nitrile rubber; butyl rubber; ethylene propylene rubber; ethylene propylene diene monomer; chlorosulfonated polyethylene; polysulfide rubber; polyurethane (PU); EVA film; co-polyester; silicones; a silicone drape; a 3M Tegaderm® drape; a polyurethane (PU) drape such as one available from Avery Dennison Corporation of Pasadena, California; polyether block polyamide copolymer (PEBAX), for example, from Arkema, France; Expopack 2327; or other appropriate material.

[0033] The sealing member 140 may allow vapor and inhibit liquids from exiting the sealed space 174 provided by the dressing 124. The sealing member 140 may be a flexible, breathable film having a high MVTR of, for example, at least about $300g/m^2$ per 24 hours. The sealing member 140 may comprise a range of medically suitable films having a thickness between about 15 microns (μm) to about 50 microns (μm). In other embodiments, a low or no vapor transfer drape might be used.

[0034] The fluid management assembly 144 may be disposed in the enclosure 172 and may include a first wicking layer 176, a second wicking layer 180, and an absorbent layer

184. The absorbent layer 184 may be positioned in fluid communication between the first wicking layer 176 and the second wicking layer 180. The first wicking layer 176 may have a grain structure (not shown) adapted to wick fluid along a surface of the first wicking layer 176. Similarly, the second wicking layer 180 may have a grain structure (not shown) adapted to wick fluid along a surface of the second wicking layer 180. For example, the first and the second wicking layer 176, 180 may wick or otherwise transport fluid in a lateral direction along the surfaces of the first and the second wicking layer 176, 180, respectively. Fluid may be transported in this manner with or without application of reduced pressure. The surfaces of the first and the second wicking layer 176, 180 may be normal relative to the thickness of each of the first and the second wicking layer 176, 180. The wicking of fluid along the first and the second wicking layers 176, 180 may enhance the distribution of the fluid over a surface area of the absorbent layer 184 that may increase absorbent efficiency and resist fluid blockages. Fluid blockages may be caused by, for example, fluid pooling in particular location in the absorbent layer 184 rather than being distributed more uniformly across the absorbent layer 184. The laminate combination of the first and the second wicking layer 176, 180 and the absorbent layer 184 may be adapted as described above to maintain an open structure, resistant to blockage, that can maintain fluid communication with, for example, the tissue site 104.

[0035] Referring to the embodiments of the fluid management assembly 144 depicted in FIGS. 1, 2, 4, and 5, a peripheral portion 186 of the first wicking layer 176 may be coupled to a peripheral portion 187 of the second wicking layer 180 to define a wicking layer enclosure 188 between the first and the second wicking layer 176, 180. In some exemplary embodiments, the wicking layer enclosure 188 may surround or otherwise encapsulate the absorbent layer 184 between the first and the second wicking layer 176, 180.

[0036] Referring to FIGS. 4 and 5, the fluid management assembly 144 may include, without limitation, any number of wicking layers and absorbent layers as desired for treating a particular tissue site. For example, the absorbent layer 184 may be a plurality of absorbent layers 184 positioned in fluid communication between the first wicking layer 176 and the second wicking layer 180 as described above. Further, as depicted in FIG. 5, at least one intermediate wicking layer 189 may be disposed in fluid communication between the plurality of absorbent layers 184. Similar to the absorbent layer 184 described above, the plurality of absorbent layers 184 and the at least one intermediate wicking layer 189 may be positioned within the wicking layer enclosure 188.

[0037] In the embodiments of FIGS. 4 and 5, sides 184a of the absorbent layers 184 may remain in fluid communication with one another for enhancing efficiency. Similarly, in the embodiment of FIG. 5, sides 189a of the at least one intermediate wicking layer 189 may remain in fluid communication with one another and with the sides 184a of the absorbent layers 184. Further, including additional absorbent layers 184 may increase the absorbent mass of the fluid management assembly 144 and generally provide greater fluid capacity. However, for a given absorbent mass, multiple light coat weight absorbent layers 184 may be utilized rather than a single heavy coat-weight absorbent layer 184 to provide a greater absorbent surface area for further enhancing the absorbent efficiency.

[0038] In one embodiment, the absorbent layer 184 may be a hydrophilic material or other absorbent material adapted to absorb fluid from, for example, the tissue site 104. Materials suitable for the absorbent layer 184 may include Luquafleece® material, Texsus FP2326, BASF 402c, Technical Absorbents 2317 available from Technical Absorbents (www.techabsorbents.com), sodium polyacrylate super absorbers, cellulosics (carboxy methyl cellulose and salts such as sodium CMC), or alginates. Materials suitable for the first and second wicking layers 176, 180 may include any material having a grain structure capable of wicking fluid as described herein, such as, for example, Libeltex TDL2 80gsm.

[0039] The fluid management assembly 144 may be a pre-laminated structure manufactured at a single location or simply individual layers of material stacked upon one another as described above. Individual layers of the fluid management assembly 144 may be bonded or otherwise secured to one another without adversely affecting fluid management by, for example, utilizing a solvent or non-solvent adhesive, or by thermal welding.

[0040] In one embodiment, the enclosure 172 defined by the base layer 132 and the sealing member 140 may include an anti-microbial layer 190. The addition of the anti-microbial layer 190 may reduce the probability of excessive bacterial growth within the dressing 124 to permit the dressing 124 to remain in place for an extended period. The anti-microbial layer 190 may be, for example, an additional layer included as a part of the fluid management assembly 144 as depicted in FIGS. 1 and 2, or a coating of an anti-microbial agent disposed in any suitable location within the dressing 124. The anti-microbial layer 190 may be comprised of elemental silver or similar compound, for example.

[0041] Referring to FIGS. 1, 2, and 6, the conduit interface 148 may be positioned proximate to the sealing member 140 and in fluid communication with the dressing 124 through an aperture (not shown) in the sealing member 140 to provide reduced pressure from

the reduced-pressure source 128 to the dressing 124. The conduit interface 140 may comprise a medical-grade, soft polymer or other pliable material. As non-limiting examples, the conduit interface 148 may be formed from polyurethane, polyethylene, polyvinyl chloride (PVC), fluorosilicone, or ethylene-propylene, etc. In one illustrative, non-limiting embodiment, conduit interface 148 may be molded from DEHP-free PVC. The conduit interface 148 may be formed in any suitable manner such as by molding, casting, machining, or extruding. Further, the conduit interface 148 may be formed as an integral unit or as individual components and may be coupled to the dressing 124 by, for example, adhesive or welding.

[0042] The conduit interface 148 may carry an odor filter 194 adapted to substantially preclude the passage of odors from the tissue site 104 out of the sealed space 174. Further, the conduit interface 148 may carry a primary hydrophobic filter 195 adapted to substantially preclude the passage of liquids out of the sealed space 174. The odor filter 194 and the primary hydrophobic filter 195 may be disposed in the conduit interface 148 or other suitable location such that fluid communication between the reduced-pressure source 128 and the dressing 124 is provided through the odor filter 194 and the primary hydrophobic filter 195. In one embodiment, the odor filter 194 and the primary hydrophobic filter 195 may be secured within the conduit interface 148 in any suitable manner, such as by adhesive or welding. In another embodiment, the odor filter 194 and the primary hydrophobic filter 195 may be positioned in any location in the dressing 124, such as an aperture (not shown), that is in fluid communication with the atmosphere or with the reduced-pressure source 128. The odor filter 194 may also be positioned in any suitable location in the system 102 that is in fluid communication with the tissue site 104.

[0043] The odor filter 194 may be comprised of a carbon material in the form of a layer or particulate. For example, the odor filter 194 may comprise a woven carbon cloth filter such as those manufactured by Chemviron Carbon, Ltd. of Lancashire, United Kingdom (www.chemvironcarbon.com). The primary hydrophobic filter 195 may be comprised of a material that is liquid impermeable and vapor permeable. For example, the primary hydrophobic filter 195 may comprise a material manufactured under the designation MMT-314 by W.L. Gore & Associates, Inc. of Newark, Delaware, United States, or similar materials. The primary hydrophobic filter 195 may be provided in the form of a membrane or layer.

[0044] Continuing with FIGS. 1, 2, and 6, the reduced-pressure source 128 may provide reduced pressure to the dressing 124 and the sealed space 174. The reduced-pressure source 128 may be any suitable device for providing reduced pressure as described herein, such as, for example, a vacuum pump, wall suction, or other source.

[0045] As used herein, "reduced pressure" may refer to a pressure less than the ambient pressure at a tissue site being subjected to treatment. This reduced pressure may be less than the atmospheric pressure. The reduced pressure may also be less than a hydrostatic pressure at a tissue site. Unless otherwise indicated, values of pressure stated herein are gauge pressures. While the amount and nature of reduced pressure applied to a tissue site may vary according to the application, the reduced pressure may be between about -5 mm Hg to about -500 mm Hg. In some embodiments, the reduced pressure may be between about -100 mm Hg to about -200 mm Hg.

[0046] The reduced pressure delivered may be constant or varied (patterned or random) and may be delivered continuously or intermittently. Although the terms "vacuum" and "negative pressure" may be used to describe the pressure applied to the tissue site, the actual pressure applied to the tissue site may be more than the pressure normally associated with a complete vacuum. Consistent with the use herein, an increase in reduced pressure or vacuum pressure may refer to a relative reduction in absolute pressure. An increase in reduced pressure may correspond to a reduction in pressure (more negative relative to ambient pressure) and a decrease in reduced pressure may correspond to an increase in pressure (less negative relative to ambient pressure).

[0047] A conduit 196 having an internal lumen 197 may be coupled in fluid communication between the reduced-pressure source 128 and the dressing 124. The conduit interface 148 may be coupled in fluid communication with the dressing 124 and adapted to connect between the conduit 196 and the dressing 124 for providing fluid communication with the reduced-pressure source 128. The conduit interface 148 may be fluidly coupled to the conduit 196 in any suitable manner, such as, for example, by an adhesive, solvent or non-solvent bonding, welding, or interference fit. An aperture (not shown) in the sealing member 140 may provide fluid communication between the dressing 124 and the conduit interface 148. In one embodiment, the conduit 196 may be inserted into the dressing 124 through an aperture (not shown) in the sealing member 140 to provide fluid communication with the reduced-pressure source 128 without utilization of the conduit interface 148. The reduced-pressure source 128 may also be directly coupled in fluid communication with the dressing

124 and/or the sealing member 140. The conduit 196 may be, for example, a flexible polymer tube. A distal end of the conduit 196 may include a coupling 198 for attachment to the reduced-pressure source 128.

[0048] The conduit 196 may have a secondary hydrophobic filter 199 disposed in the internal lumen 197 such that fluid communication between the reduced-pressure source 128 and the dressing 124 is provided through the secondary hydrophobic filter 199. The secondary hydrophobic filter 199 may be, for example, a porous, sintered polymer cylinder sized to fit the dimensions of the internal lumen 197 to substantially preclude liquid from bypassing the cylinder. The secondary hydrophobic filter 199 may also be treated with an absorbent material adapted to swell when brought into contact with liquid to block the flow of the liquid. The secondary hydrophobic filter 199 may be positioned at any location within the internal lumen 197. However, positioning the secondary hydrophobic filter 199 within the internal lumen 197 closer toward the reduced-pressure source 128, rather than the dressing 124, may allow a user to detect the presence of liquid in the internal lumen 197.

[0049] Referring now to FIG. 7, FIG. 7 depicts the dressing 124 including a fluid management assembly 244 suitable for use with the dressing 124 and the system 102 as previously described. The fluid management assembly 244 may include a first wicking layer 276, a second wicking layer 280, and an absorbent layer 284 comprised of substantially the same materials and properties as those described above in connection with the fluid management assembly 144. Thus, the first wicking layer 276, the second wicking layer 280, and the absorbent layer 284 may be analogous to the first wicking layer 176, the second wicking layer 180, and the absorbent layer 184, respectively.

[0050] In the fluid management assembly 244, the second wicking layer 280 may have a peripheral portion 287. The second wicking layer 280 and the peripheral portion 287 of the second wicking layer 280 may be positioned in contact with the sealing member 140. The absorbent layer 284 may have a peripheral portion 285 extending beyond the peripheral portion 287 of the second wicking layer 280. The absorbent layer 284 may be positioned proximate to the second wicking layer 280 such that the peripheral portion 285 of the absorbent layer 284 is in contact with the sealing member 140 surrounding the peripheral portion 287 of the second wicking layer 280. Similarly, the first wicking layer 276 may have a peripheral portion 286 extending beyond the peripheral portion 285 of the absorbent layer 284. The first wicking layer 276 may be positioned proximate the absorbent layer 284 such that the peripheral portion 286 of the first wicking layer 276 is in contact with the sealing

member 140 surrounding the peripheral portion 285 of the absorbent layer 284. Further, the first wicking layer 276 may be positioned proximate the base layer 132. Thus, at least the peripheral portions 287, 285, and 286 in contact with the sealing member 140 may be coupled to the sealing member 140, such as, for example, by an adhesive coating disposed on a surface of the sealing member 140 facing the base layer 132. The adhesive coating may be similar to the adhesive 136 applied across the surface of the sealing member 140 facing the base layer 132. In the embodiment described above, the second wicking layer 280, the absorbent layer 284, and the first wicking layer 276 may respectively have increasing surface areas to enhance contact with the adhesive coating. In other embodiments, the fluid management assembly 244 may include any number of absorbent layers and wicking layers, arranged as described above, for treating a particular tissue site.

[0051] In operation of the system 102 according to one illustrative embodiment, the interface manifold 120 may be disposed proximate to the tissue site 104. The dressing 124 may then be applied over the manifold 120 and the tissue site 104 to form the sealed space 174. Specifically, the base layer 132 may be applied covering the interface manifold 120 and the tissue surrounding the tissue site 104. The materials described above for the base layer 132 may have a tackiness for holding the dressing 124 initially in position. The tackiness may be such that if an adjustment is desired, the dressing 124 may be removed and reapplied. Once the dressing 124 is in the desired position, a force may be applied, such as hand pressure, on a side of the sealing member 140 facing outwards from the tissue site 104. The force applied to the sealing member 140 may cause at least some portion of the adhesive 136 to extend through the plurality of apertures 160 and into contact with the tissue surrounding the tissue site 104, such as the epidermis 106, to releaseably adhere the dressing 124 about the tissue site 104. In this manner, the configuration of the dressing 124 may provide an effective and reliable seal against challenging anatomical surfaces, such as an elbow or heal, at and around the tissue site 104. Further, the dressing 124 may permit re-application or re-positioning to, for example, correct air leaks caused by creases and other discontinuities in the dressing 124 and the tissue site 104. The ability to rectify leaks may increase the reliability of the therapy and reduce power consumption.

[0052] As the dressing 124 comes into contact with fluid from the tissue site 104, the fluid may move through the apertures 160 toward the fluid management assembly 144, 244. The fluid management assembly 144, 244 may wick or otherwise move the fluid through the interface manifold 120 and away from the tissue site 104. As described above, the interface

manifold layer 120 may be adapted to communicate fluid from the tissue site 104 rather than store the fluid. Thus, relative to the interface manifold layer 120, the fluid management assembly 144, 244 may exhibit absorbent properties that may be more absorbent than any absorbent properties that may be exhibited by the interface manifold 120. The fluid management assembly 144, 244 being more absorbent than the manifold layer 120 may provide an absorbent gradient through the dressing 124 that attracts fluid from the tissue site 104 to the fluid management assembly 144, 244. Thus, fluid management assembly 144, 244 may be adapted to wick, pull, draw, or otherwise attract fluid from the tissue site 104 through the manifold layer 120. The fluid may initially come into contact with the first wicking layer 176, 276. The first wicking layer 176, 276 may distribute the fluid laterally along the surface of the first wicking layer 176, 276 for absorption and storage within the absorbent layer 184, 284. Similarly, fluid coming into contact with the second wicking layer 180, 280 may be distributed laterally along the surface of the second wicking layer 180, 280 for absorption within the absorbent layer 184, 284.

[0053] Although this specification discloses advantages in the context of certain illustrative, non-limiting embodiments, various changes, substitutions, permutations, and alterations may be made without departing from the scope of the specification as defined by the appended claims. Further, any feature described in connection with any one embodiment may also be applicable to any other embodiment.

We claim:

1. A system for treating a tissue site, comprising:

an interface manifold adapted to be positioned proximate the tissue site;

a dressing, comprising:

a base layer having a periphery surrounding a central portion and a plurality of apertures disposed through the periphery and the central portion, wherein the base layer is adapted to cover the interface manifold and tissue surrounding the tissue site,

an adhesive in fluid communication with the apertures in the periphery of the base layer,

a sealing member having a periphery and a central portion, the periphery of the sealing member positioned proximate the periphery of the base layer, wherein the central portion of the sealing member and the central portion of the base layer define an enclosure,

a first wicking layer disposed in the enclosure,

a second wicking layer disposed in the enclosure,

an absorbent layer disposed between the first wicking layer and the second wicking layer, and

a conduit interface positioned proximate to the sealing member and in fluid communication with the enclosure; and

a reduced-pressure source adapted to be coupled in fluid communication with the conduit interface to provide reduced pressure to the dressing.

2. The system of claim 1, wherein the interface manifold is adapted to distribute reduced pressure to the tissue site, and wherein the interface manifold is comprised of a hydrophobic material.

3. The system of claim 1, wherein the dressing is adapted to provide reduced pressure to the interface manifold and to store fluid extracted from the tissue site through the interface manifold.

4. The system of claim 1, wherein the central portion of the base layer is adapted to be positioned proximate the interface manifold and the periphery of the base layer is adapted to be positioned proximate the tissue surrounding the tissue site.

5. The system of claim 1, wherein the periphery of the base layer is adapted to surround the interface manifold.

6. The system of claim 1, wherein the apertures in the base layer are adapted to be in fluid communication with the interface manifold and the tissue surrounding the tissue site.

7. The system of claim 1, wherein the base layer is comprised of silicone.

8. The system of claim 1, wherein the adhesive is adapted to be in fluid communication with the tissue surrounding the tissue site through the apertures in the base layer, and wherein the adhesive is positioned at least between the periphery of the sealing member and the periphery of the base layer.

9. The system of claim 1, wherein the adhesive is an acrylic adhesive.

10. The system of claim 1, wherein the sealing member is liquid impermeable, and wherein the sealing member comprises polyurethane.

11. The system of claim 1, wherein the sealing member is adapted to provide a sealed space between the sealing member and the tissue site.

12. The system of claim 1, wherein the adhesive is disposed as a coating on a surface of the sealing member that faces the base layer.

13. The system of claim 1, wherein the first wicking layer has a grain structure adapted to wick fluid along a surface of the first wicking layer, and wherein the second wicking layer has a grain structure adapted to wick fluid along a surface of the second wicking layer.

14. The system of claim 1, wherein the absorbent layer is comprised of a hydrophilic material that is adapted to absorb fluid.

15. The system of claim 1, wherein the absorbent layer is a plurality of absorbent layers, and wherein the plurality of absorbent layers are positioned in fluid communication between the first wicking layer and the second wicking layer.

16. The system of claim 15, further comprising at least one intermediate wicking layer disposed in fluid communication between the absorbent layers.

17. The system of claim 1, wherein a peripheral portion of the first wicking layer is coupled to a peripheral portion of the second wicking layer providing a wicking layer enclosure surrounding the absorbent layer between the first and the second wicking layer.

18. The system of claim 1, the dressing further comprising an anti-microbial layer disposed in the enclosure.

19. The system of claim 1, further comprising an odor filter adapted to substantially preclude the passage of odors out of a sealed space between the sealing member and the tissue site, wherein the odor filter is carried by the conduit interface, and wherein the odor filter comprises carbon.

20. The system of claim 19, the dressing further comprising a primary hydrophobic filter adapted to substantially preclude the passage of liquids out of the sealed space, wherein the primary hydrophobic filter is carried by the conduit interface.

21. The system of claim 20, further comprising a conduit having an internal lumen coupled in fluid communication between the conduit interface and the reduced-pressure source, wherein the conduit has a secondary hydrophobic filter disposed in the internal lumen.

22. The system of claim 21, wherein fluid communication between the dressing and the reduced-pressure source is provided through each of the odor filter, the primary hydrophobic filter, and the secondary hydrophobic filter.

23. The system of claim 1, wherein the second wicking layer has at least a peripheral portion positioned in contact with the sealing member, wherein the absorbent layer has a peripheral portion in contact with the sealing member and surrounding the peripheral portion of the second wicking layer, and wherein the first wicking layer has a peripheral portion in contact with the sealing member and surrounding the peripheral portion of the absorbent layer.

24. The system of claim 23, wherein at least the peripheral portions of each of the second wicking layer, the absorbent layer, and the first wicking layer are coupled to the sealing member.

25. A dressing for treating a tissue site, comprising:

a base layer having a periphery surrounding a central portion and a plurality of apertures disposed through the periphery and the central portion, wherein the base layer is adapted to cover the tissue site and tissue surrounding the tissue site;

an adhesive in fluid communication with the apertures in the base layer;

a sealing member having a periphery and a central portion, the periphery of the sealing member positioned proximate the periphery of the base layer, wherein the central portion of the sealing member and the central portion of the base layer define an enclosure;

a first wicking layer disposed in the enclosure;

a second wicking layer disposed in the enclosure;

an absorbent layer positioned in fluid communication between the first wicking layer and the second wicking layer, wherein a peripheral portion of the first wicking layer is coupled to a peripheral portion of the second wicking layer providing a wicking layer enclosure surrounding the absorbent layer between the first and the second wicking layer; and

a conduit interface positioned proximate to the sealing member and in fluid communication with the enclosure.

26. The dressing of claim 25, wherein the dressing is adapted to provide reduced pressure to the tissue site and to store fluid extracted from the tissue site.

27. The dressing of claim 25, wherein the central portion of the base layer is adapted to cover the tissue site and the periphery of the base layer is adapted to be positioned proximate the tissue surrounding the tissue site.

28. The dressing of claim 25, wherein the apertures in the base layer are adapted to be in fluid communication with the tissue site and the tissue surrounding the tissue site.

29. The dressing of claim 25, wherein the base layer is comprised of silicone.

30. The dressing of claim 25, wherein the adhesive is adapted to be in fluid communication with the tissue surrounding the tissue site through the apertures in the base layer.

31. The dressing of claim 25, wherein the adhesive is an acrylic adhesive.

32. The dressing of claim 25, wherein the sealing member is liquid impermeable, and wherein the sealing member comprises polyurethane.

33. The dressing of claim 25, wherein the sealing member is adapted to provide a sealed space between the sealing member and the tissue site.

34. The dressing of claim 25, wherein the adhesive is disposed as a coating on a surface of the sealing member that faces the base layer.

35. The dressing of claim 25, wherein the first wicking layer has a grain structure adapted to wick fluid along a surface of the first wicking layer, and wherein the second wicking layer has a grain structure adapted to wick fluid along a surface of the second wicking layer.

36. The dressing of claim 25, wherein the absorbent layer is comprised of a hydrophilic material that is adapted to absorb fluid.

37. The dressing of claim 25, wherein the absorbent layer is a plurality of absorbent layers, and wherein the plurality of absorbent layers are positioned in fluid communication between the first wicking layer and the second wicking layer.

38. The dressing of claim 37, further comprising at least one intermediate wicking layer disposed in fluid communication between the absorbent layers.

39. The dressing of claim 25, further comprising an anti-microbial layer disposed in the enclosure.

40. The dressing of claim 25, further comprising an odor filter adapted to substantially preclude the passage of odors out of a sealed space between the sealing member and the tissue site, wherein the odor filter is carried by the conduit interface, and wherein the odor filter comprises carbon.

41. The dressing of claim 40, further comprising a primary hydrophobic filter adapted to substantially preclude the passage of liquids out of the sealed space, wherein the primary hydrophobic filter is carried by the conduit interface.

42. A system for treating a tissue site, comprising:

an interface manifold adapted to be positioned proximate the tissue site and to distribute reduced pressure to the tissue site;

a dressing adapted to provide reduced pressure to the interface manifold and to store fluid extracted from the tissue site through the interface manifold, comprising:

a base layer having a periphery surrounding a central portion and a plurality of apertures disposed through the periphery and the central portion, wherein the central portion of the base layer is adapted to be positioned proximate the interface manifold and the periphery of the base layer is adapted to be positioned proximate tissue surrounding the tissue site, wherein the periphery of the base layer is adapted to surround the interface manifold, and wherein the apertures in the base layer are adapted to be in fluid communication with the interface manifold and the tissue surrounding the tissue site,

an adhesive in fluid communication with the apertures in the base layer, wherein the adhesive is adapted to be in fluid communication with the tissue surrounding the tissue site through the apertures in the base layer,

a sealing member having a periphery and a central portion, the periphery of the sealing member positioned proximate the periphery of the base layer, wherein the central portion of the sealing member and the central portion of the base layer define an enclosure,

a first wicking layer disposed in the enclosure,

a second wicking layer disposed in the enclosure,

an absorbent layer positioned in fluid communication between the first wicking layer and the second wicking layer, and

a conduit interface positioned proximate to the sealing member and in fluid communication with the enclosure; and

a reduced-pressure source adapted to be coupled in fluid communication with the conduit interface to provide reduced pressure to the dressing.

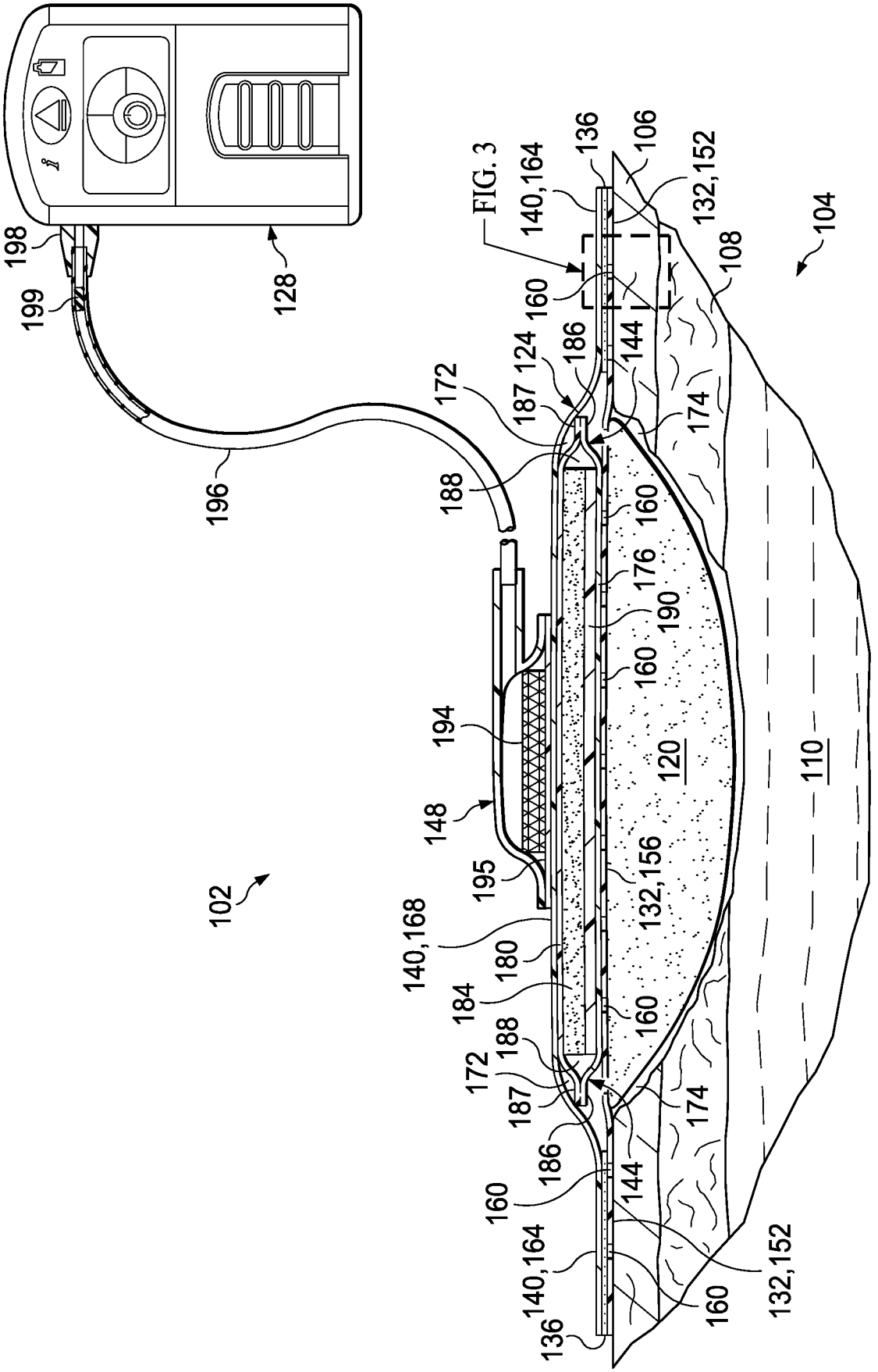
FIG. 3
102
104
106
108
110
120
124
128
132,152
132,156
136
140,164
140,168
144
148
160
172
174
176
180
184
186
187
188
190
194
195
196
198
199

FIG. 1

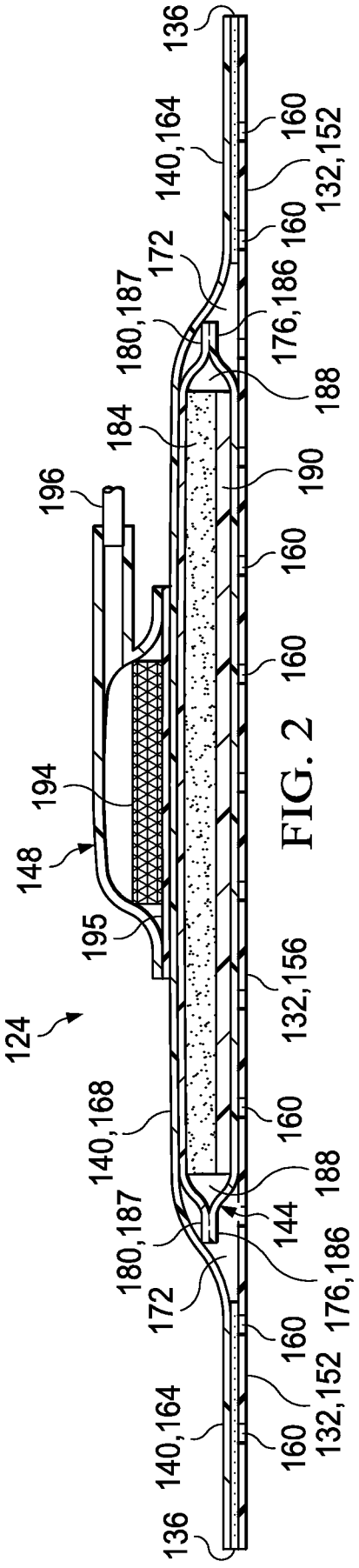
136
140,164
160
132,152
160
172
180,187
176,186
188
184
190
196
160
160
194
148
195
132,156
124
140,168
160
188
144
180,187
176,186
172
160
132,152
160
140,164
136

FIG. 2

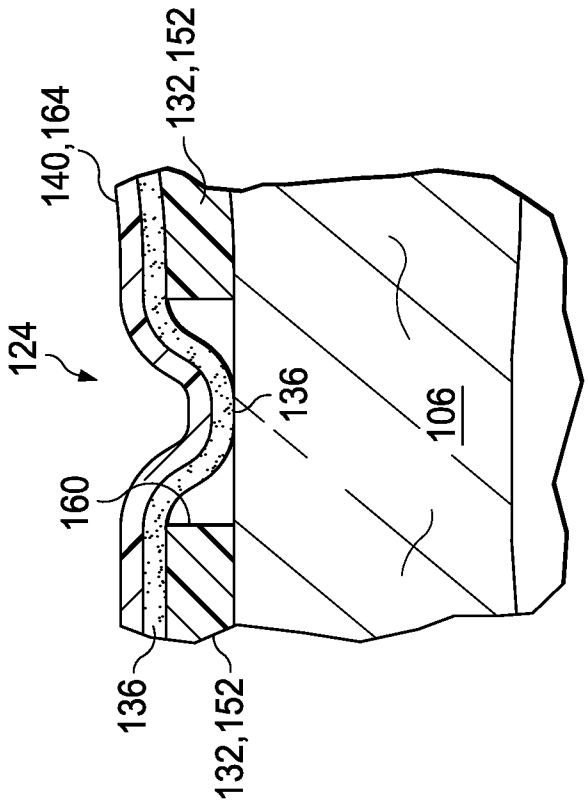
140,164
132,152
124
136
106
160
136
132,152

FIG. 3

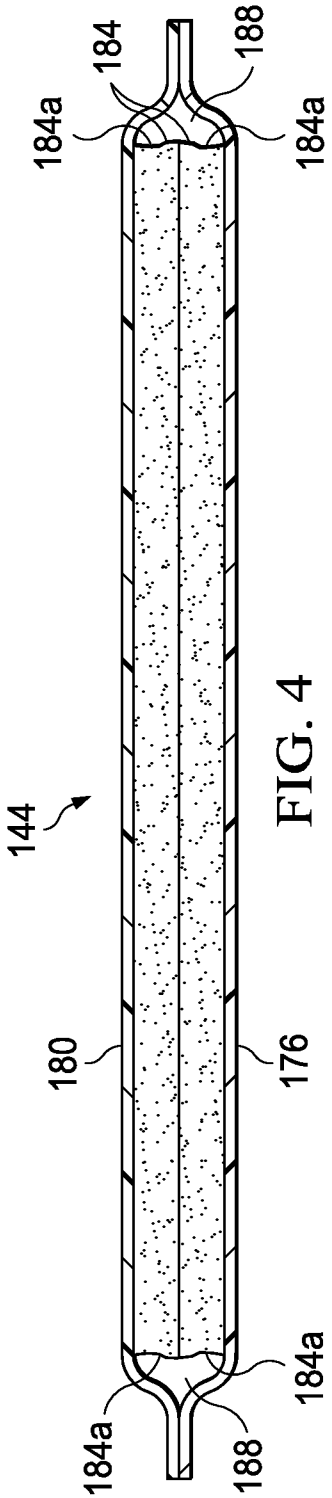
144
184a
184
188
184a
180
176
184a
184a
188

FIG. 4

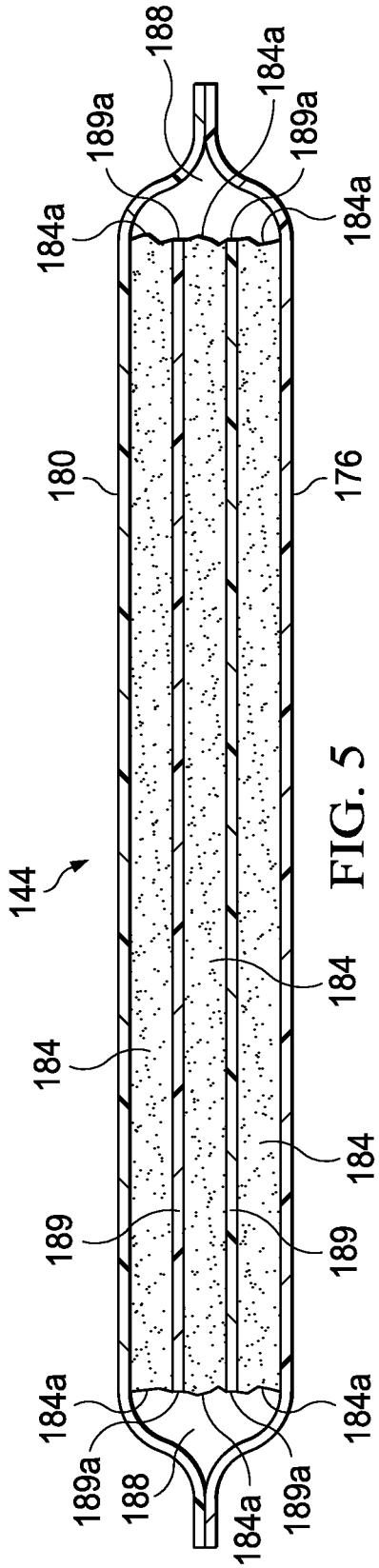
188
189a
184a
189a
184a
184a
180
176
144
184
184
184
189
189
184a
184a
189a
188
184a
189a

FIG. 5

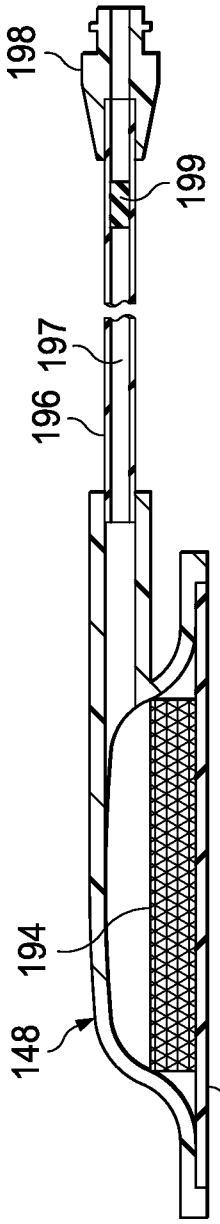
198
199
197
196
194
148
195

FIG. 6

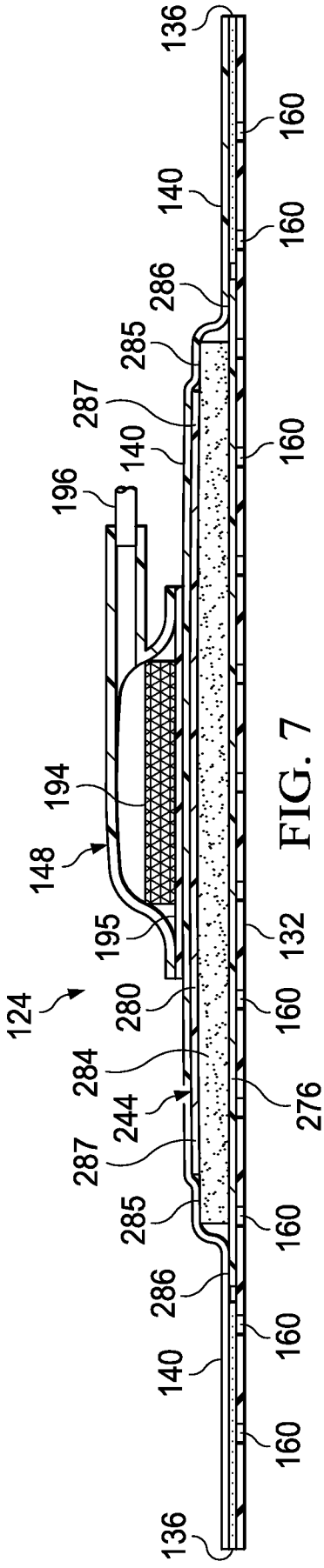
136
160
140
160
286
285
287
140
160
196
194
148
195
132
124
280
160
284
276
244
287
285
160
286
160
140
160
136

FIG. 7

INTERNATIONAL SEARCH REPORT

International application No
PCT/US2014/016320

A. CLASSIFICATION OF SUBJECT MATTER
INV. A61F13/00 A61F13/02 A61M1/00 A61M27/00
ADD.

According to International Patent Classification (IPC) or to both national classification and IPC

B. FIELDS SEARCHED

Minimum documentation searched (classification system followed by classification symbols)
A61F A61M

Documentation searched other than minimum documentation to the extent that such documents are included in the fields searched

Electronic data base consulted during the international search (name of data base and, where practicable, search terms used)
EPO-Internal, WPI Data

C. DOCUMENTS CONSIDERED TO BE RELEVANT

Category*	Citation of document, with indication, where appropriate, of the relevant passages	Relevant to claim No.
X	US 2009/227969 A1 (JAEB JONATHAN PAUL [US] ET AL) 10 September 2009 (2009-09-10)	1-6,8, 11,12, 14,17, 25-28, 30,33, 34,36,42
Y	paragraphs [0044] - [0050]; figures 1-20	7,9,10, 13,15, 16, 18-24, 29,31, 32,35, 37-41

-/--

[X] Further documents are listed in the continuation of Box C.

[X] See patent family annex.

* Special categories of cited documents :

"A" document defining the general state of the art which is not considered to be of particular relevance

"E" earlier application or patent but published on or after the international filing date

"L" document which may throw doubts on priority claim(s) or which is cited to establish the publication date of another citation or other special reason (as specified)

"O" document referring to an oral disclosure, use, exhibition or other means

"P" document published prior to the international filing date but later than the priority date claimed

"T" later document published after the international filing date or priority date and not in conflict with the application but cited to understand the principle or theory underlying the invention

"X" document of particular relevance; the claimed invention cannot be considered novel or cannot be considered to involve an inventive step when the document is taken alone

"Y" document of particular relevance; the claimed invention cannot be considered to involve an inventive step when the document is combined with one or more other such documents, such combination being obvious to a person skilled in the art

"&" document member of the same patent family

Date of the actual completion of the international search	Date of mailing of the international search report
7 April 2014	15/04/2014

Name and mailing address of the ISA/	Authorized officer
European Patent Office, P.B. 5818 Patentlaan 2 NL - 2280 HV Rijswijk Tel. (+31-70) 340-2040, Fax: (+31-70) 340-3016	Gennari, Silvia

1

INTERNATIONAL SEARCH REPORT

International application No
PCT/US2014/016320

C(Continuation). DOCUMENTS CONSIDERED TO BE RELEVANT

Category*	Citation of document, with indication, where appropriate, of the relevant passages	Relevant to claim No.
X Y	WO 2007/085396 A1 (RIESINGER BIRGIT [DE]) 2 August 2007 (2007-08-02) claims 1-31; figures 1-11	25-28, 30,33, 34,36 1-24,31, 32,35, 37-42

Y	WO 01/85248 A1 (KCI LICENSING INC [US]; HUNT KENNETH WILLIAM [GB]; HEATON KEITH PATRIC) 15 November 2001 (2001-11-15) claims 1-18; figures 1-3	1-42

Y	US 2011/224631 A1 (SIMMONS TYLER [US] ET AL) 15 September 2011 (2011-09-15) claims 1-38; figures 1-18	1-42

1

INTERNATIONAL SEARCH REPORT

Information on patent family members

International application No
PCT/US2014/016320

Patent document cited in search report	Publication date	Patent family member(s)	Publication date
US 2009227969 A1	10-09-2009	AU 2009221772 A1	11-09-2009
		AU 2009221774 A1	11-09-2009
		CA 2715843 A1	11-09-2009
		CA 2716769 A1	11-09-2009
		CN 101959479 A	26-01-2011
		CN 101959480 A	26-01-2011
		CN 103251989 A	21-08-2013
		EP 2249761 A2	17-11-2010
		EP 2254537 A2	01-12-2010
		EP 2335749 A1	22-06-2011
		EP 2345436 A1	20-07-2011
		EP 2345437 A1	20-07-2011
		EP 2345438 A1	20-07-2011
		EP 2361641 A1	31-08-2011
		EP 2711034 A1	26-03-2014
		HK 1148186 A1	30-01-2014
		JP 5118212 B2	16-01-2013
		JP 5118213 B2	16-01-2013
		JP 2011513003 A	28-04-2011
		JP 2011514209 A	06-05-2011
		KR 20100120712 A	16-11-2010
		KR 20100120713 A	16-11-2010
		RU 2010135033 A	10-04-2012
		RU 2010135036 A	10-04-2012
		SG 174765 A1	28-10-2011
		TW 200942281 A	16-10-2009
		TW 200946149 A	16-11-2009
		US 2009227969 A1	10-09-2009
		US 2009240185 A1	24-09-2009
		US 2013090615 A1	11-04-2013
		US 2013102979 A1	25-04-2013
		WO 2009111655 A2	11-09-2009
		WO 2009111657 A2	11-09-2009
WO 2007085396 A1	02-08-2007	DE 202006007877 U1	27-07-2006
		DK 1976472 T3	17-09-2012
		EP 1976472 A1	08-10-2008
		ES 2389004 T3	22-10-2012
		WO 2007085396 A1	02-08-2007
WO 0185248 A1	15-11-2001	AT 322303 T	15-04-2006
		AU 779655 B2	03-02-2005
		AU 5243401 A	20-11-2001
		BR 0110682 A	11-02-2003
		CA 2408305 A1	15-11-2001
		CN 1438904 A	27-08-2003
		DE 60118546 T2	24-08-2006
		DK 1284777 T3	14-08-2006
		EP 1284777 A1	26-02-2003
		ES 2261397 T3	16-11-2006
		GB 2365350 A	20-02-2002
		HK 1053434 A1	14-07-2006
		IL 152686 A	17-02-2010
		JP 4741160 B2	03-08-2011
		JP 5095833 B2	12-12-2012
		JP 2003532504 A	05-11-2003
		JP 2011125730 A	30-06-2011
		KR 20030007597 A	23-01-2003

INTERNATIONAL SEARCH REPORT

Information on patent family members

International application No
PCT/US2014/016320

Patent document cited in search report	Publication date	Patent family member(s)	Publication date
		MX PA02010984 A	19-08-2004
		NZ 522486 A	27-08-2004
		PT 1284777 E	31-08-2006
		US 2004030304 A1	12-02-2004
		US 2008243044 A1	02-10-2008
		US 2011224635 A1	15-09-2011
		US 2012220963 A1	30-08-2012
		WO 0185248 A1	15-11-2001
		ZA 200209097 A	19-02-2004
US 2011224631 A1	15-09-2011	AU 2011224365 A1	23-08-2012
		CA 2789000 A1	15-09-2011
		CN 102781380 A	14-11-2012
		EP 2544640 A1	16-01-2013
		JP 2013521886 A	13-06-2013
		TW 201200176 A	01-01-2012
		US 2011224631 A1	15-09-2011
		WO 2011112724 A1	15-09-2011