(No Model.)

V. W. MACFARLANE.

Apparatus for Transporting Lard.

No. 240,831. **Patented May 3, 1881.**

Fig. 1.

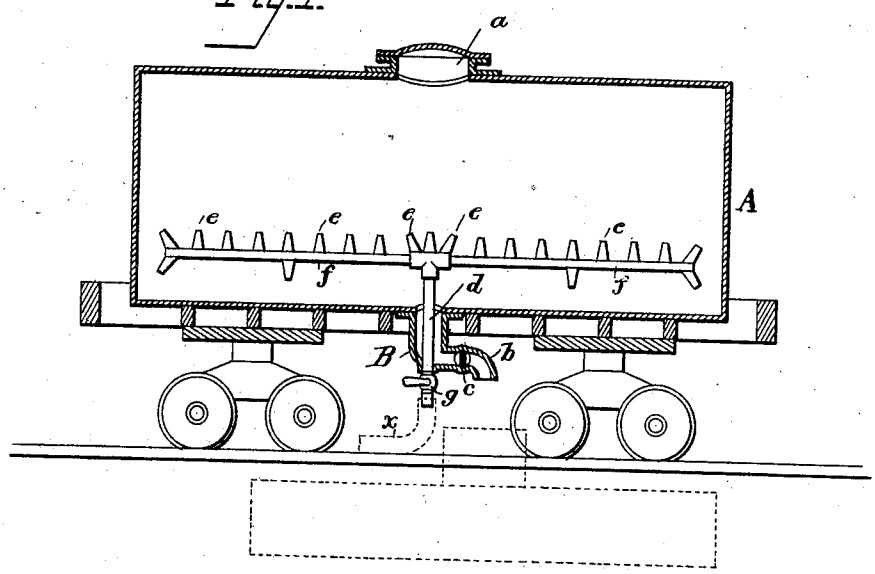

Fig. 2.

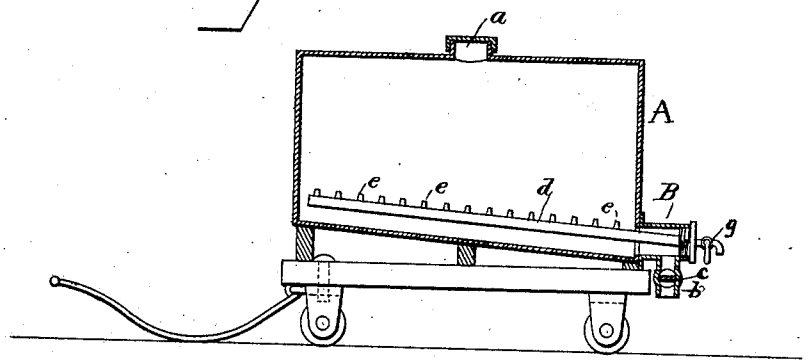

Attest:
Courtney A. Cooke.
J. O'M. McCleary.

V. W. Macfarlane
By his attys
Charles E. Foote

N. PETERS, PHOTO-LITHOGRAPHER, WASHINGTON, D. C.

UNITED STATES PATENT OFFICE.

VICTOR W. MACFARLANE, OF NEW YORK, N. Y.

APPARATUS FOR TRANSPORTING LARD.

SPECIFICATION forming part of Letters Patent No. 240,831, dated May 3, 1881.

Application filed March 14, 1881. (No model.)

To all whom it may concern:

Be it known that I, VICTOR W. MACFARLANE, of the city, county, and State of New York, have invented certain Improvements in Apparatus for Transporting Lard, of which the following is a specification.

My invention relates to certain improvements in transporting and handling lard and other viscid materials, such as molasses; and it consists in an improved tank wherein the material may be transported in bulk and withdrawn without the loss incident to ordinary modes of effecting the same results.

In the drawings, Figure 1 is a sectional elevation, showing my improved tank in connection with a railway-car; and Fig. 2, a modified form shown in connection with a hand-truck.

The case or tank A is suitably constructed of any desired material and of any form which circumstances may render suitable, and is provided with an inlet-pipe or with an opening, *a*, through which it may be filled with the lard or other material to be transported. This tank may be placed upon the platform of a railway-car or on a hand or horse truck, and may be permanently or detachably connected to said platform or truck, and when so permanently attached the platform may be so constructed as to be readily removed from the wheels or trucks to permit the tank to be deposited in the storing-house.

To the bottom or one side of the tank is connected a metal casing, B, provided with a branch, *b*, to which is fitted a cock, *c*, and through this casing B extends a pipe, *d*, provided with a cock, *g*. This pipe may extend along the bottom of the tank, as shown in Fig. 2, or may be bent into a coil suitably disposed within the tank, and may have lateral branches *f*. Whatever is the construction, the pipe or its branches are perforated within the tank and provided with nozzles *e*, so arranged as to direct steam or hot air flowing through the pipe to all portions of the tank.

When the tank filled with lard arrives at its destination a steam or air pipe, *x*, is applied to the end of the tube *d* and the cock *g* turned, so as to permit the steam or air to flow through the pipe *d*, from whence it will be directed through the whole mass of lard, and if the latter is solidified will speedily bring it to a fluid condition. As the steam is admitted the cock *c* is turned so as to permit the liquid lard to flow through the branch *b* into a tank beneath the car (dotted lines, Fig. 1) or into any other suitable receptacle. As the opening *a* is sealed, the pressure of the steam within the tank will act upon the surface of the lard and insure its passage through the discharge-opening.

In some cases the pipe *d* is detachably inserted in the casing B, so as to be withdrawn. Thus in Fig. 2 it is secured to the detachable cap.

I claim—

The combination, in an apparatus for transporting lard, of a tank, A, adapted to be supported upon a suitable truck, a casing, B, provided with an outlet and cock, a tube, *d*, extending through said casing into the tank and provided with nozzles or perforations, and a cock, *g*, arranged in said tube, substantially as set forth.

In testimony whereof I have signed my name to this specification in the presence of two subscribing witnesses.

VICTOR W. MACFARLANE.

Witnesses:
F. O. MCCLEARY,
WILLIAM PAXTON.