US00D784084S

(12) **United States Design Patent**
Bartlett et al.

(10) **Patent No.: US D784,084 S**
(45) **Date of Patent: ** Apr. 18, 2017**

(54) **WATER BOTTLE CAP DESIGN**

(71) Applicant: **Overton Enterprises, LLC**, Austin, TX (US)

(72) Inventors: **Peter C. Bartlett**, Austin, TX (US); **Redza M. Shah**, Austin, TX (US); **Kimberley J. Overton**, Austin, TX (US)

(73) Assignee: **Overton Enterprises, LLC**, Austin, TX (US)

(**) Term: **15 Years**

(21) Appl. No.: **29/535,047**

(22) Filed: **Aug. 3, 2015**

(51) **LOC (10) Cl.** **07-01**

(52) **U.S. Cl.**
USPC **D7/511**

(58) **Field of Classification Search**
USPC D7/509, 510, 511, 523, 538, 543; 220/200, 705–710, 592.16, 592.17; 215/396–400; D23/209; 210/203, 205, 210/206; D9/447; D24/194, 197
CPC A47G 19/22; A47G 19/2205; A47G 19/2211; A47G 19/2216; A47G 19/2272; A47G 19/2288; A45F 3/16; A47J 43/27; B65D 41/04; B65D 41/56; B65D 43/02; B65D 47/08
See application file for complete search history.

(56) **References Cited**

U.S. PATENT DOCUMENTS

D315,245 S * 3/1991 Envall D3/202
D350,672 S * 9/1994 Egger D7/510
D358,964 S * 6/1995 Foster D12/411
5,680,965 A * 10/1997 Beck B65D 47/243 222/153.06
D391,448 S * 3/1998 Winer D7/510
6,045,833 A * 4/2000 Landau B65D 51/00 426/106
D488,560 S * 4/2004 Renz D24/196
D489,480 S * 5/2004 Angeletta D28/7
D508,202 S * 8/2005 Dobson D9/447
D582,767 S * 12/2008 Batton D9/447
D584,151 S * 1/2009 Murphy D9/447
D596,487 S * 7/2009 Batton D9/447
D637,490 S * 5/2011 McKinney D9/447
D639,969 S * 6/2011 Pukall D24/196
D656,820 S * 4/2012 Willows D9/447
(Continued)

OTHER PUBLICATIONS

http://szsportbottle.en.alibaba.com/product/60184735621-800498847/Soft_Flask_TPU_Foodgrade_Material_OEM_Water_Bottle_with_Silicone_Nozzle_for_Running.html.*
https://spibelt.com/shop/spi-h2o/spi-h2o-companion/.*

Primary Examiner — Daniel Bui
Assistant Examiner — Andrew Kerr
(74) *Attorney, Agent, or Firm* — Conley Rose PC

(57) **CLAIM**

The ornamental design for a water bottle cap, as shown and described.

DESCRIPTION

FIG. **1** is a perspective view of a water bottle cap showing our new design;
FIG. **2** is a side elevation view thereof;
FIG. **3** is a top plan view thereof;
FIG. **4** is a bottom plan view thereof; and,
FIG. **5** is a perspective view thereof, in use condition.
The broken line in the figure drawings is included for the purpose of illustrating unclaimed environment and forms no part of the claimed design.
A side-elevation view opposite the side-elevation view shown is omitted as such would be identical to the side-elevation view.

1 Claim, 5 Drawing Sheets

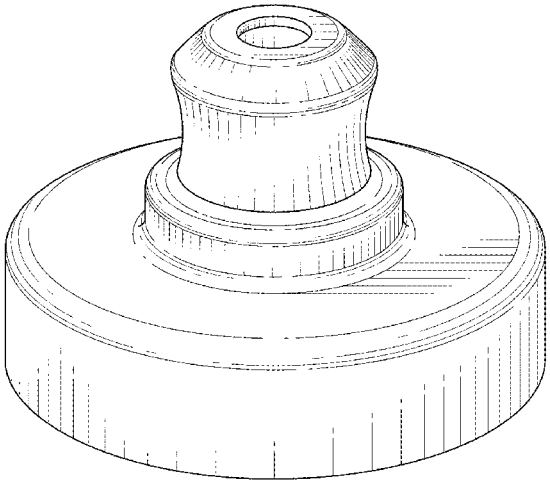

(56) **References Cited**

U.S. PATENT DOCUMENTS

D719,827	S	*	12/2014	Duran	D9/447
D749,416	S	*	2/2016	Herbst	D9/447
D751,395	S	*	3/2016	Willows	D9/447
D752,234	S	*	3/2016	Moore	D24/194
D752,434	S	*	3/2016	Willows	D9/447
D752,435	S	*	3/2016	Willows	D9/447
D761,648	S	*	7/2016	Karl, IV	D9/447
D762,473	S	*	8/2016	Willows	D9/447
D763,685	S	*	8/2016	Arriaga	D9/436
2003/0093121	A1	*	5/2003	Randolph	A61J 11/0035 606/236
2005/0092785	A1	*	5/2005	Hearld	B65D 47/243 222/525
2005/0258201	A1	*	11/2005	Willows	B65D 25/22 224/148.4
2009/0302261	A1	*	12/2009	Skillern	A45F 3/16 251/337
2012/0168441	A1	*	7/2012	Lane	B65D 47/242 220/212
2014/0124469	A1	*	5/2014	Richard	A61J 11/02 215/11.5
2015/0232318	A1	*	8/2015	Meldeau	B67D 3/0019 222/189.06
2016/0185489	A1	*	6/2016	Garcia	B65D 47/0842 215/227
2016/0200486	A1	*	7/2016	Meyers	A47G 19/2266 215/229

* cited by examiner

FIG. 1

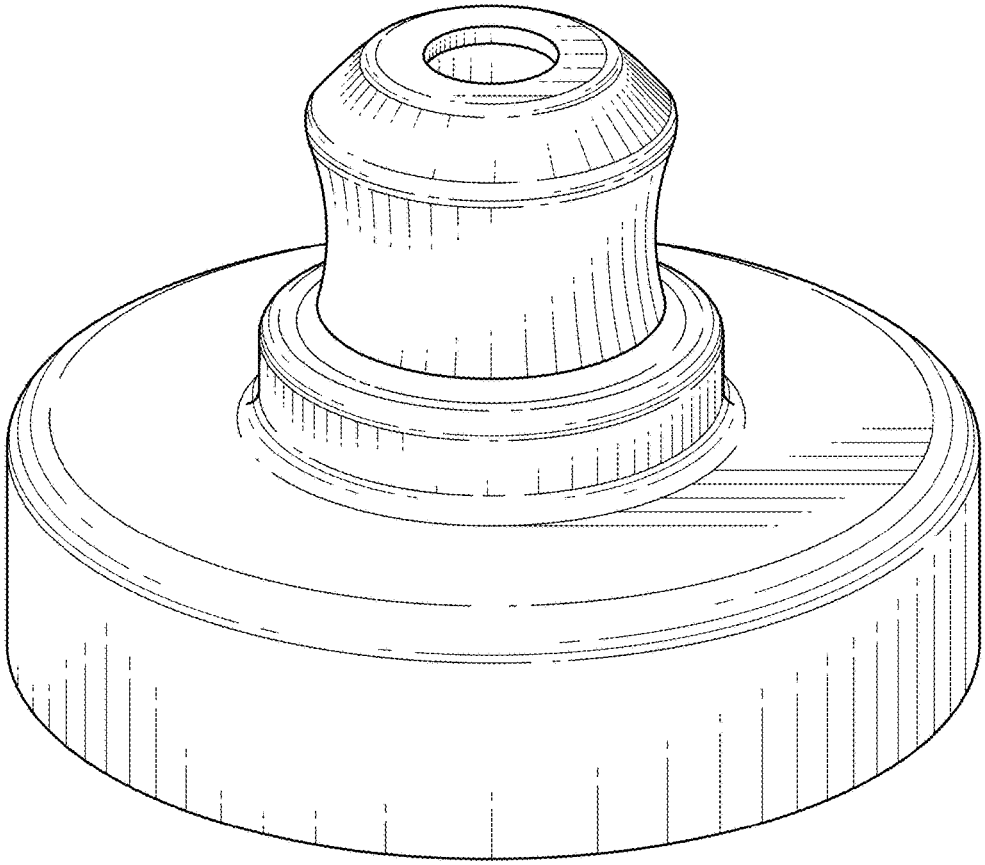

FIG. 2

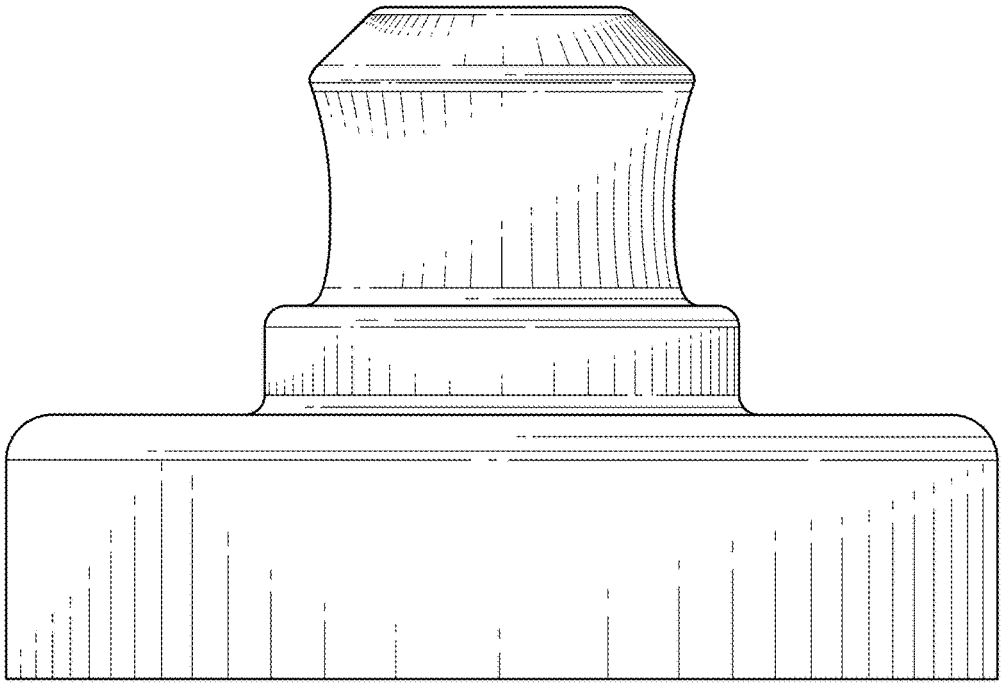

FIG. 3

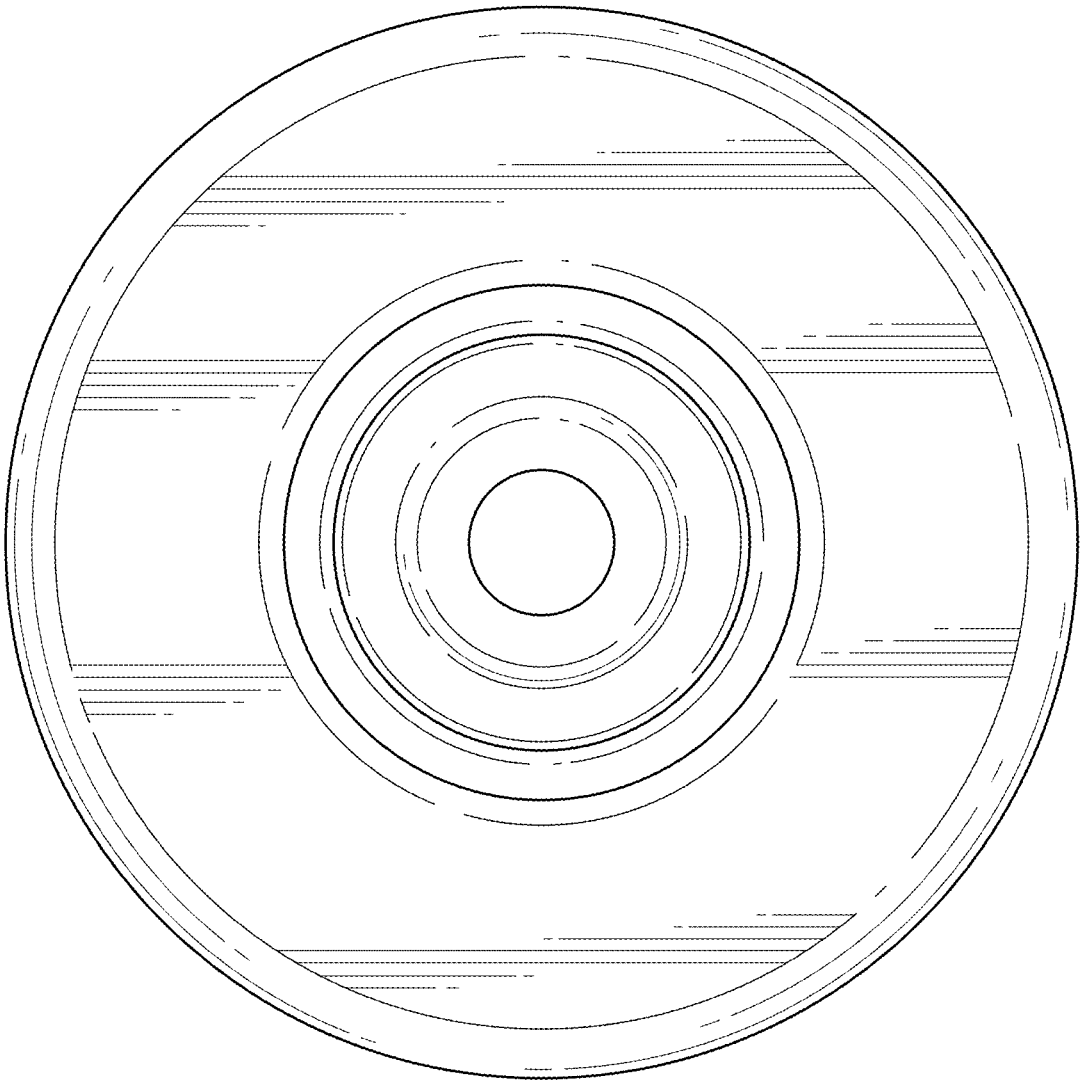

FIG. 4

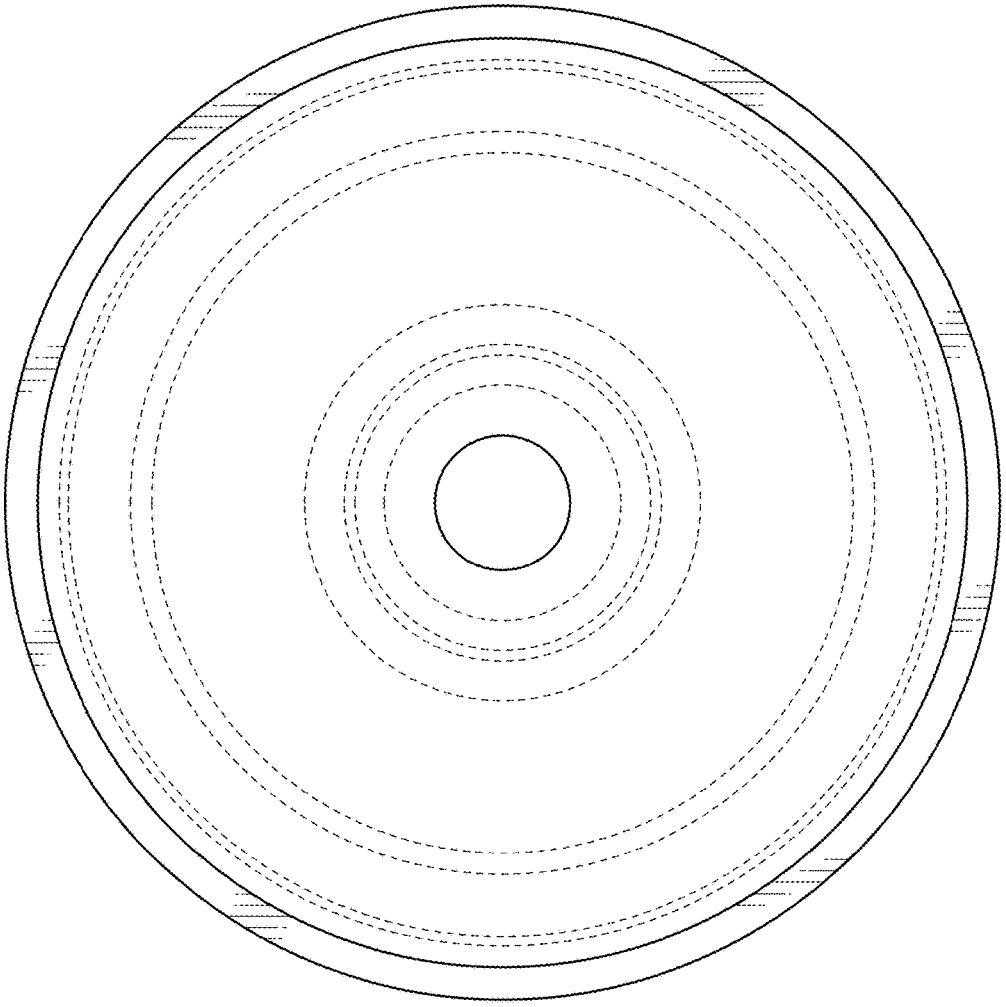
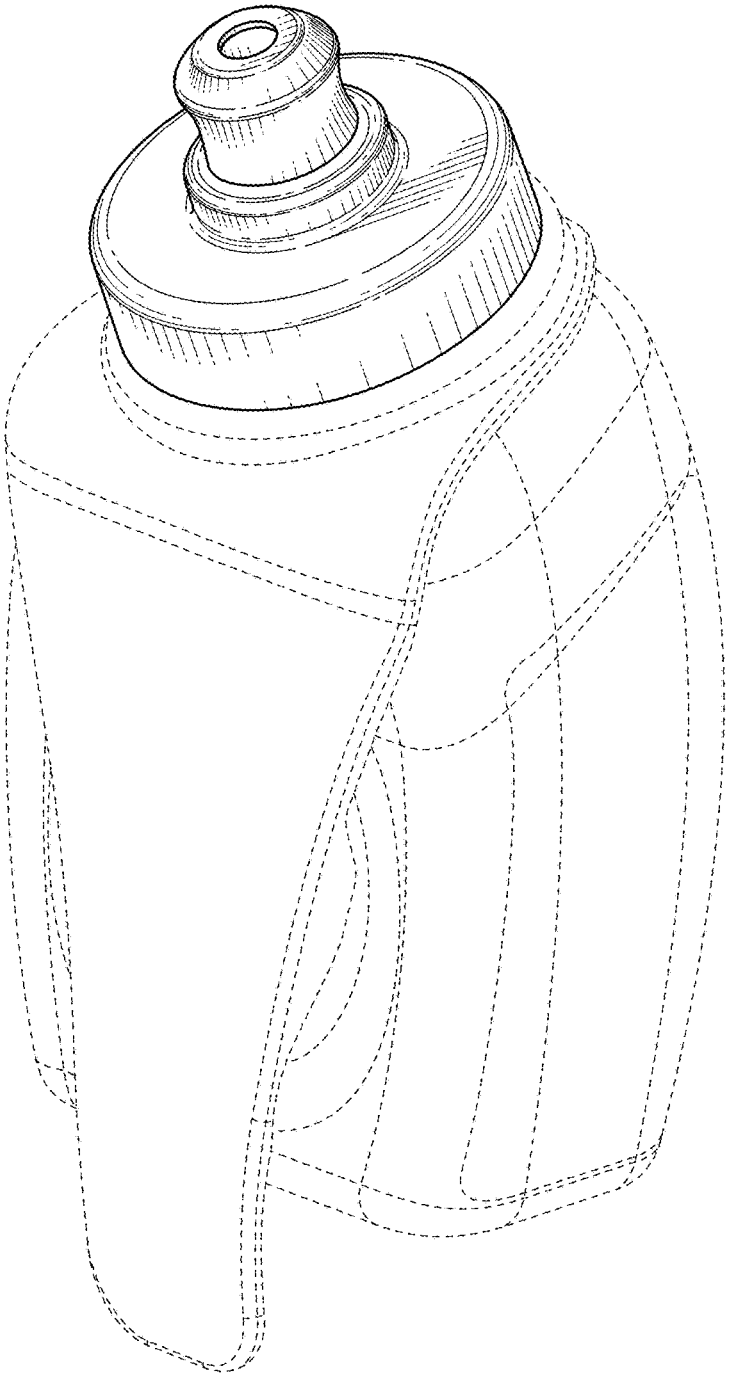
FIG. 5