July 31, 1951 I. W. GREENBERG 2,562,235

WINDOW ENCLOSURE

Original Filed June 20, 1942 2 Sheets-Sheet 1

FIG. 1

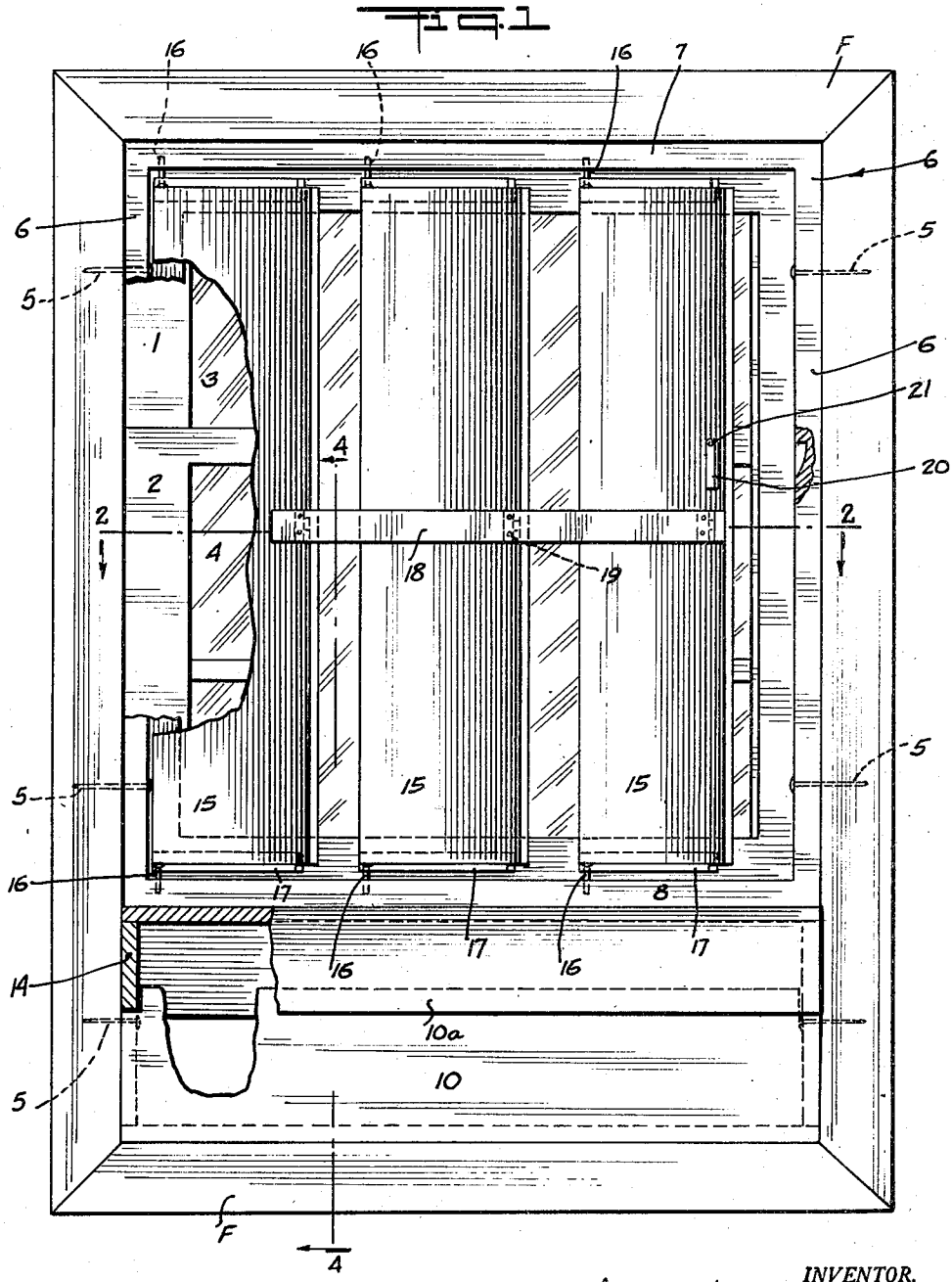

INVENTOR.

Irving W. Greenberg

BY

Mock & Blum

ATTORNEYS

July 31, 1951 I. W. GREENBERG 2,562,235

WINDOW ENCLOSURE

Original Filed June 20, 1942 2 Sheets-Sheet 2

Fig. 2

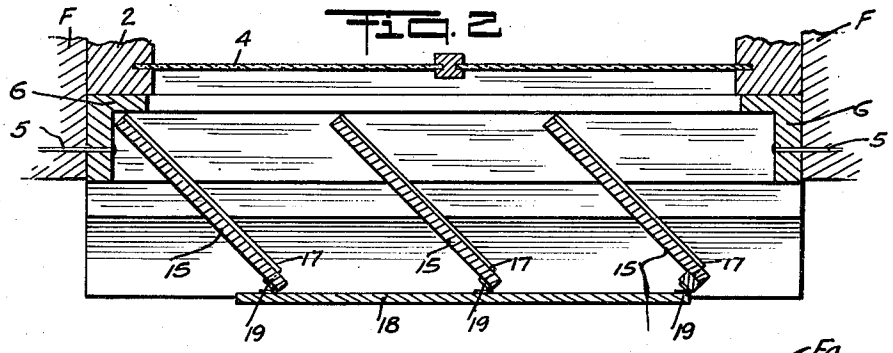

Fig. 3

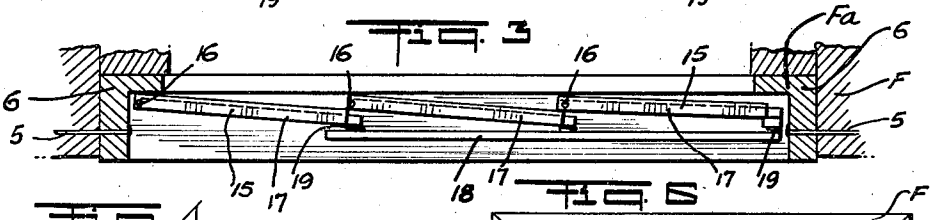

Fig. 4

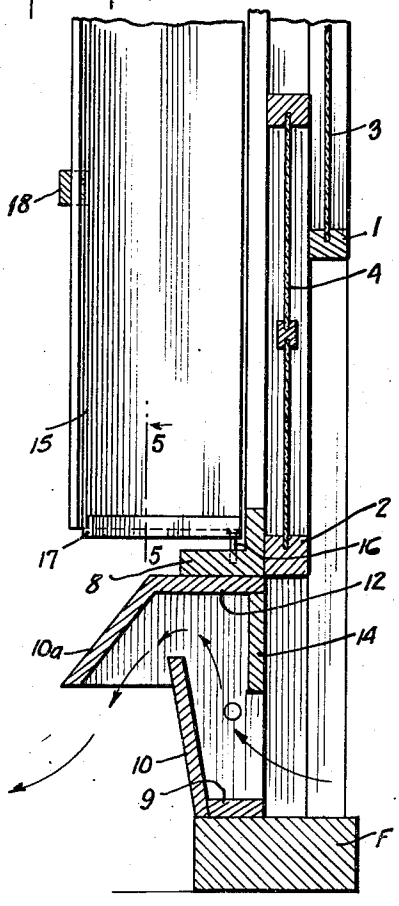

Fig. 6

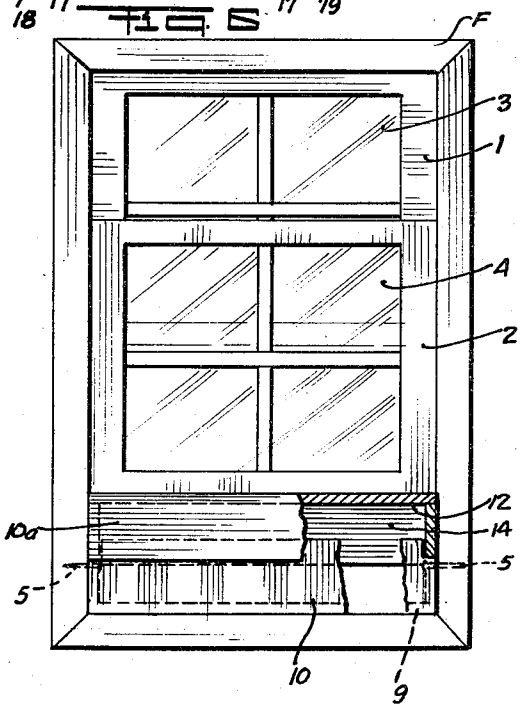

Fig. 5

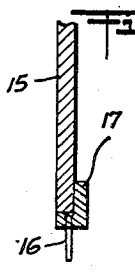

INVENTOR.
Irving W. Greenberg
BY
Mock & Blum
ATTORNEYS

Patented July 31, 1951 2,562,235

UNITED STATES PATENT OFFICE

2,562,235

WINDOW ENCLOSURE

Irving W. Greenberg, New York, N. Y.

Substituted for abandoned application Serial No. 447,756, June 20, 1942. This application August 8, 1950, Serial No. 178,215

1 Claim. (Cl. 98—88)

1

My invention relates to a new and improved black-out and protective enclosure for windows.

This application is a refiling of my abandoned application Serial No. 447,756, filed June 20, 1942, and allowed April 9, 1945.

The principal objects of my invention are to provide an enclosure whereby a room can be brightly illuminated while the protected windows are kept open, and while confining the light to the room, so that adequate illumination and ventilation can be secured and the danger from shattered glass is minimized; and to provide an enclosure which can be readily opened and closed, thus eliminating the necessity for curtains, blinds, shatter-proof glass, etc.

Another object of my invention is to provide a device which can be simply and cheaply constructed, and which can be made of plywood, hard board, and other light and readily available material.

Other objects will be stated in the annexed description and drawings, which illustrate a preferred embodiment of the invention.

Fig. 1 is a front elevation of the improved device, with the louvers in open position. In this view, the representation of part of the device has been broken away.

Fig. 2 is a section on the line 2—2 of Fig. 1.

Fig. 3 is a horizontal sectional view, similar to Fig. 2, showing the louvers in closed position.

Fig. 4 is a partial sectional view on the line 4—4 of Fig. 1.

Fig. 5 is a partial sectional view on the line 5—5 of Fig. 4.

Fig. 6 is a front elevation of the window, showing the ventilator at the bottom of the window frame. In this view, the protective louver-device is not shown.

The device can be applied to any window-frame F. It is illustrated as applied to a conventional window-frame F, which has an outer window or sash 3 and an inner window or sash 4. Said sashes 3 and 4 are made of glass and they have respective frames 1 and 2, which are vertically slidable in the frame F. Fig. 4 shows the outer sash 3 in its top closed position, and the inner sash 4 in partially raised position.

The window-frame F of the building is provided with a supplemental frame F*a*, which is preferably made of plywood, hard board, etc., although it can be made of metal or any suitable material. Said supplemental frame F*a* is connected to the window-frame F in any suitable manner, as by fastening devices 5. Said supplemental frame F*a* has vertical walls 6, a top horizontal wall 7, and a bottom wall 8. Fig. 4 shows the bottom wall of the frame 2 of the inner sash 4 at the level of said bottom wall 8 of frame F*a*.

2

The horizontal wall 9 of an upstanding ventilator panel 10 is fixed to the bottom wall of the frame F. Members 9 and 10 can be integral or they can be suitably connected. The width of members 9 and 10 is equal to the width of the space between the inner lateral surfaces of the vertical walls of frame F, in order to provide a light-tight fit. The top edge of ventilator-panel 10 is located above and between the bottom edges of the inwardly-inclined ventilator panel 10*a* and of the vertical ventilator panel 14. These panels 10*a* and 14 are transversely spaced depending panels. Said panels 10*a* and 14 are integral with a horizontal panel 12, or suitably connected to said panel 12. The lateral edges of members 10*a*, 12 and 14 also fit light-tight between the lateral inner vertical walls of frame F. Members 9 and 10 constitute a lower ventilator unit, and members 10*a*, 12 and 14 constitute an upper ventilator unit. Said units are made of plywood, hardboard, or any other material. The material of said ventilator units is preferably, but not necessarily, opaque and non-reflecting. Hence, when the lower window is raised to the level which is shown in Fig. 4, air can flow between the respective ventilator units rearwardly into the room, as indicated by the arrows in Figs. 4, while the passage of light out of the room below the bottom wall 8 is prevented by said ventilator units, if they are made of opaque material, which is preferably, but not necessarily, non-reflecting. The panel 12 of the upper ventilator unit can be fixed to the wall 8, or to the inner lateral faces of the vertical walls of frame F.

A plurality of louvers 15 are pivotally connected to the adjacent faces of walls 7 and 8 of frame F*a*, by respective pivot pins 16. These pivot pins are located in superposed pairs, so that each louver is turnable about a vertical axis. Each said louver is turnably connected at its outer vertical edge to the horizontal walls 7 and 8. The top and bottom edge of each louver 15 is preferably fixed to a reinforcing edge-member 17, and each pivot pin 16 is fixed to a respective edge-member 17, as shown in Fig. 4.

Each louver 15 is connected by a hinge 19 to a bar 18. Said bar 18 is located in the inside of the room which is to be protected, and at the inner edges of said louvers 15. Said bar 18 can be moved to-and-fro horizontally by hand so that the louvers 15 can be turned in respective vertical planes which are perpendicular to the common

vertical plane of frame F and of frame F*a*, or said louvers **15** can be turned to make an angle other than 90° with said plane, in order partially to close the opening which is protected by said louvers, to any desired extent. Said louvers are always located in respective vertical planes which are parallel to each other, in this embodiment. Said louvers **15** can be turned to the closing position shown in Fig. 3, in which the adjacent respective vertical edges of the middle louver and of the end louvers overlap each other and said louvers abut each other at their vertical edge-portions, so as to provide light-tight lap joints. I have shown three louvers in the drawings, but I can use any number of such louvers, depending on the width of the frame F, or upon the widths of the respective louvers. The end vertical edges of the end louvers **15** are overlapped by the respective inner lateral extensions of the angular vertical walls **6** of the supplemental frame F*a* when the louvers are in closing position. Hence, when the louvers are in the closing position of Fig. 3, a light-tight enclosure is provided, in combination with the ventilator units. The frame F*a* and the louvers **15** and the other parts of the device are preferably, but not necessarily, made of opaque and non-reflecting material. Said material can be opaque without being non-reflecting. A latch **20** is connected by pivot pin **21** to one of the louvers. When the louvers are in the closing position of Fig. 3, said latch **20** can be releasably secured to the adjacent vertical wall **6** of frame F*a*. Said frame F*a* and the closed louvers **15** prevent shattered glass from flying into the room.

The improved device can be simply and cheaply constructed in any room, so that industrial buildings and other buildings can be easily protected. The device can be used to control the entrance of sunlight into a room, as an efficient substitute for the ordinary Venetian blind. When it is not necessary to use the device for black-out purposes, it can be made either of opaque material, or of material which has some light-permeability.

The upper sash **4** of the window can be opened to any desired extent, in which case the ventilation above the bottom wall **8** of the frame F*a* is controlled wholly by the louvers **15**.

Fig. 3 shows a close fit between the left-hand vertical edge of the left-hand louver **15** and the respective wall **6** of frame F*a*, when the louvers are closed. The right-hand side of frame F*a* can be shaped to provide a like close fit with the right-hand edge of the right-hand louver.

The device can also be readily installed in new buildings, as original equipment.

When a black-out is not necessary, the ventilator units can be made of transparent glass, and the louvers can be made of any desired light-permeability.

The panels **10***a* and **14** are transversely spaced, so that panel **10***a* is located inwardly of panel **14**. The top edge of the upstanding panel **10** is at least at the same level as the bottom edge of either of the depending and transversely-spaced panels **10***a* and **14**. The top edge of upstanding panel **10** is preferably at a higher level than the bottom edges of both of the depending panels **10***a* and **14**.

It is obvious that the ventilating units could have their positions reversed without departing from the scope of the claims, so that panel **10** in such case would be a depending panel and panels **10***a* and **14** would then be upstanding panels.

As shown in Fig. 3, the end vertical edges of the end louvers **15** are spaced from the respective vertical walls **6** of frame F*a*, when said louvers are in respective closing positions. Since the horizontal walls **7** and **8** of the frame F*a* have vertical extensions which overlap the respective horizontal edges of each louver **15**, as shown in Fig. 1, and since the adjacent vertical edges of the louvers overlap each other in closing position, the above combination makes it possible to construct the device very simply and cheaply, without closely fitting the parts, and also to operate the louvers with a minimum of friction and binding. The parts can therefore be manufactured of opaque plywood, hardboard, etc., which is preferably made flame-resistant or fire-proof.

When the louvers are open, said louvers are sufficiently spaced to provide easy access to the windows, so that said windows can be opened and closed by hand.

If desired, a ventilating device could be also provided at the top of the window-opening, similar to the ventilating device which is shown at the bottom of said window opening in Fig. 4.

The invention is not limited to mounting the louvers for respective turning movements around respective vertical axes.

The light will be efficiently intercepted if the free edge of panel **10** is in substantially the same as the free edge of either panel **10***a* or panel **14**. Hence, when I state in the claim that the top edge of the upstanding panel is substantially at the same level as the bottom edge of one or both of the depending panels, I include the staggered relation of the top edge of panel **10** to the bottom edge of panel **10***a* or panel **14**, or relative to the bottom edges of both panels **10***a* and **14**.

I have shown a preferred embodiment of my invention, but it is clear that numerous changes and omissions can be made without departing from the spirit of the invention.

I claim:

An enclosure for use in association with the window opening of a building, said window opening having a window frame and having respective front and rear sashes which are vertically movable relative to said window frame to close the opening of said window frame and to open the opening of said window frame, an inner frame which is nested in said window frame, said inner frame being located rearwardly of said rear sash, said rear sash making sliding contact with said inner frame, said inner frame having a bottom wall which is located above the bottom wall of said window frame, a ventilating member fixed to the bottom wall of said inner frame and depending therefrom, another ventilating member fixed to the bottom wall of said window frame and extending upwardly from said bottom wall of said window frame, said ventilating members being spaced from each other and being constructed and located to permit air to pass between them when the bottom of said rear sash is located above said bottom wall of said window frame, said ventilating members being also shaped and located to obstruct the passage of light transversely into the building between the respective bottom walls of said window frame and said inner frame, a plurality of louvers which are turnably connected to said inner frame by vertical pivot pins, the rear edges of said louvers being pivotally connected to a manipulating bar, said louvers being movable to overlapping positions in which they close the opening of said window frame, said louvers being

located wholly in said inner frame when said louvers are in said closing position.

IRVING W. GREENBERG.

REFERENCES CITED

The following references are of record in the file of this patent:

UNITED STATES PATENTS

Number	Name	Date
108,557	Boyd	Oct. 25, 1870
854,033	Glazier et al.	May 21, 1907
934,460	Peterson	Sept. 21, 1909
981,635	Glass	Jan. 17, 1911
1,052,812	Garland	Feb. 11, 1913
1,110,447	Lindsey	Sept. 15, 1914
1,356,428	Cammann	Oct. 19, 1920
1,369,099	Hanson	Feb. 22, 1921
1,511,920	Tregillus	Oct. 14, 1924
1,512,826	Denesha	Oct. 21, 1924
1,664,456	Linz	Apr. 3, 1928
2,059,616	Shortlidge	Nov. 3, 1936
2,125,669	Fisk	Aug. 2, 1938
2,153,075	Copeland	Apr. 4, 1939
2,290,463	Bishop	July 21, 1942
2,324,454	Huff	July 13, 1943

FOREIGN PATENTS

Number	Country	Date
11,752	Great Britain	1911
320,456	Great Britain	Oct. 17, 1929