March 2, 1943. L. E. BORDONARO 2,312,314

RIBBON SHIFTING MECHANISM

Filed Feb. 14, 1941 2 Sheets-Sheet 1

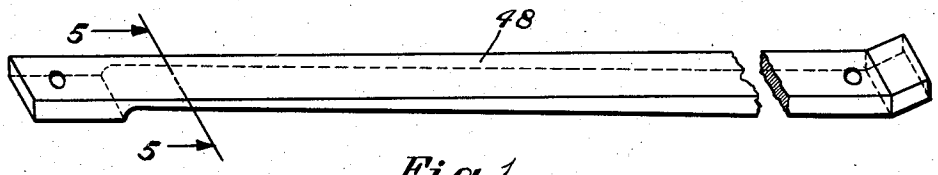

Fig. 1

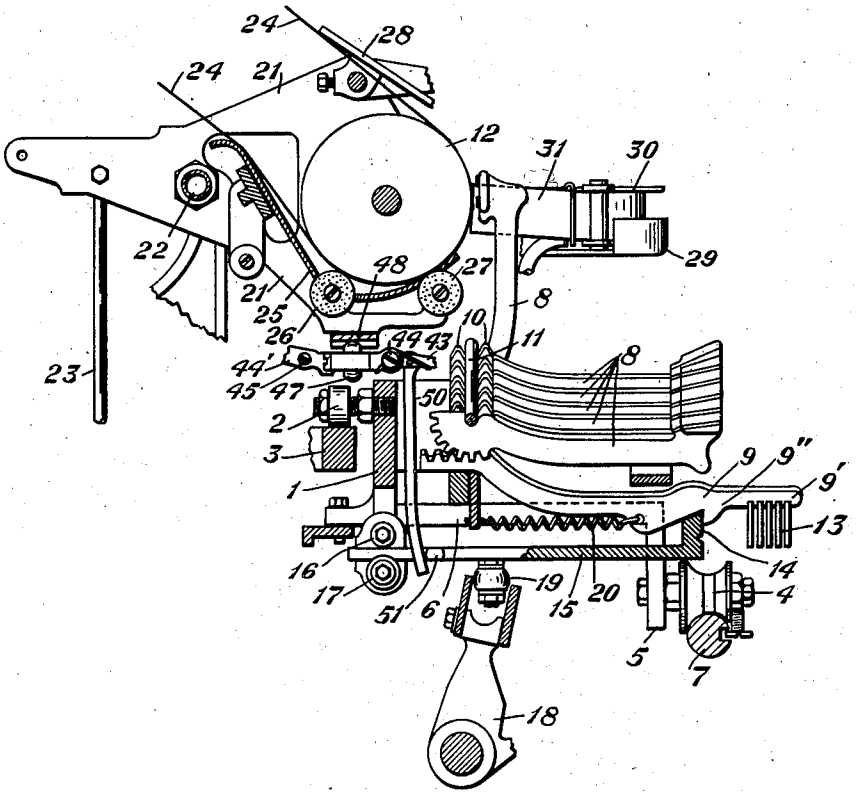

Fig. 2

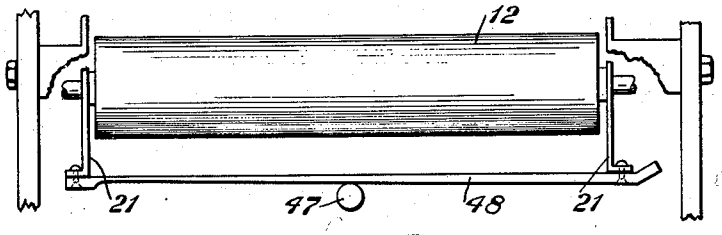

Fig. 3

INVENTOR
L. E. Bordonaro
BY
ATTORNEY

March 2, 1943. L. E. BORDONARO 2,312,314

RIBBON SHIFTING MECHANISM

Filed Feb. 14, 1941 2 Sheets-Sheet 2

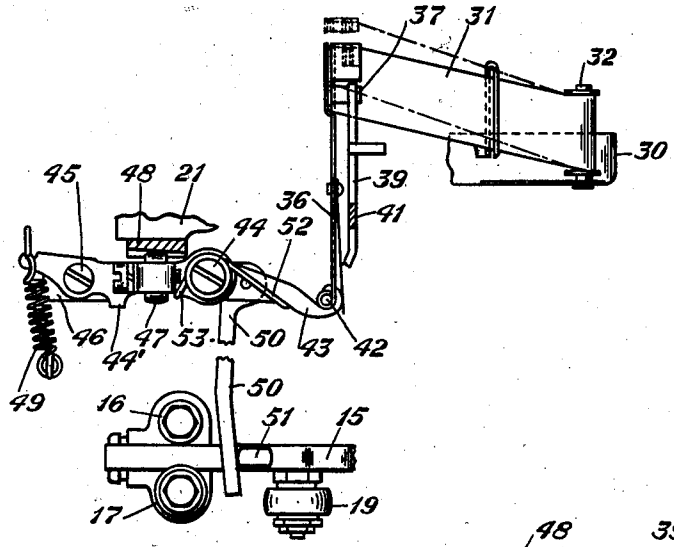

Fig. 4

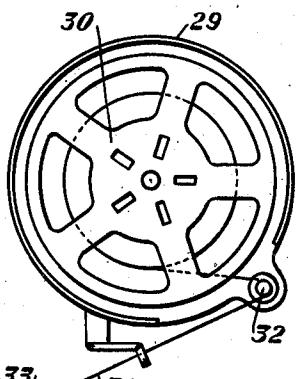

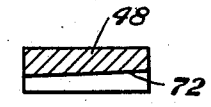

Fig. 5

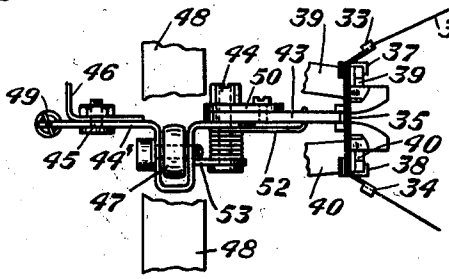

Fig. 6

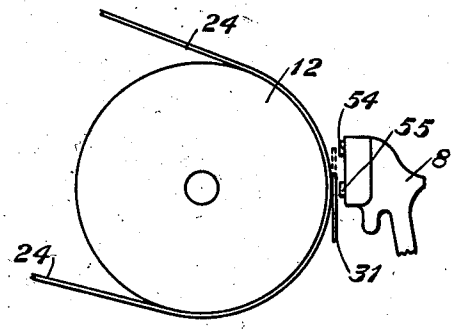

Fig. 7

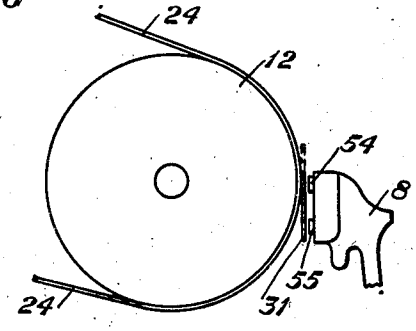

Fig. 8

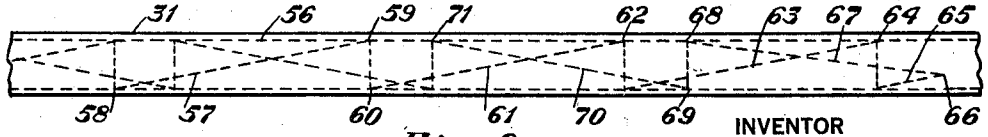

Fig. 9

INVENTOR
L. E. Bordonaro
BY
ATTORNEY

Patented Mar. 2, 1943 2,312,314

UNITED STATES PATENT OFFICE

2,312,314

RIBBON SHIFTING MECHANISM

Lucian Emmanuel Bordonaro, Rochester, N. Y., assignor to American Telephone and Telegraph Company, a corporation of New York

Application February 14, 1941, Serial No. 378,912

6 Claims. (Cl. 197—158)

This invention relates to printing mechanisms such as typewriters, teletypewriters and the like, and relates more particularly to a mechanism for automatically shifting a ribbon in such a manner as to increase the life thereof.

In typewriters and teletypewriters as at present designed the typing mechanism consisting of a set of type bars, and a platen carrying the paper upon which printed characters are to be struck, are moved relative to each other as successive characters are printed, and in order to print the character a ribbon is interposed between the type bar and the paper on the platen as it strikes upon the latter. This ribbon in accordance with the present practice is struck at a given point in its width, and each successive character strikes the ribbon at the same relative position as respects its upper and lower edges. In other words, if one character strikes the ribbon in the middle, all of the others will strike the ribbon at its middle, although at successive points along its length. The result is that the entire wear on the ribbon as the ribbon is gradually fed back and forth in front of the striking place is all concentrated upon one horizontal level, and the portions of the ribbon above or below this level are unused. This concentration of the wear along one line shortens the life of the ribbon.

It is the purpose of the present invention to cause an automatic shifting up and down of the ribbon as it is moved relatively to the platen so that successive characters will strike the ribbon at different points of its width.

More specifically considered, an object of the invention is to so design a typing machine that, with relative movement between the type carriage and the platen from left to right during the typing operation, the point on the ribbon where the type pallets strike shifts from one edge of the ribbon at the start of a line across the page to the other edge of the ribbon at the end of the line.

The invention will now be more fully understood from the following description thereof when read in connection with the accompanying drawings, in which Figure 1 shows a slide bar along which the mechanism which holds the ribbon at its striking point moves as the type carriage is shifted relative to the platen; Fig. 2 is a side view partly in section showing the relationship between elements of the type carriage and the platen; Fig. 3 is a front view of the platen showing how the slide bar is related thereto; Fig. 4 is a side view partly in section of a detail showing how the ribbon is supported and shifted as the ribbon controlling mechanism passes along the slide bar; Fig. 5 is a cross-section of the slide bar; Fig. 6 is a plan view with parts broken away of the ribbon controlling mechanism shown in Fig. 4, together with a ribbon spool cup, the figure showing how the ribbon is wound upon a spool as it is gradually shifted with respect to the position on the platen at which a type bar impinges against the ribbon to print a character; Fig. 7 is a figure showing the relative positions of the platen, ribbon and type bar during the printing of letters or lower shift characters; Fig. 8 is a similar view showing the positions of these elements during the printing of figures or other upper shift characters; and Fig. 9 is a view showing a strip of ribbon with dotted lines indicating how the level at which the various characters are printed shifts from top to bottom of the ribbon in accordance with the invention.

Referring to Fig. 2, 1 designates a portion of the frame of the type carriage of a teletypewriter. On the rear of this frame a roller 2 is provided which rolls upon a rear carriage track 3 extending from side to side between sections of the main frame of the teletypewriter, so that the type carriage may roll back and forth from side to side to print successive characters on a sheet of paper carried by the platen, and then return to start a new line. A front roller 4 is mounted on a lug 5 carried by a side extension 6 of the main frame of the type carriage. This roller 4 rests upon the front carriage track 7 extending from side to side of the main frame (not shown) of the teletypewriter. Two of these rollers are provided to keep the type basket level on its track. By rolling along the front and rear carriage tracks the rollers 2 and 4 enable the type carriage mechanism to be shifted from side to side during the operations of typing a line and returning the carriage. It will be understood, of course, that these rollers are not essential but may be replaced by sliding surfaces.

Type bars such as 8 are provided with toothed segments cooperating with a rack upon the upper rear surface of pull bars such as 9. The rear ends of the type bars and the pull bars are mounted in transverse slots radially cut in an arcuate-shaped type bar segment 10 mounted upon side bars of the main frame 1. A longitudinal groove in the type bar segment 10 carries a bearing rod 11 likewise bent in the form of an arc so as to fit in the arc-shaped longitudinal groove of the type bar segment 10. This bearing rod serves as a bearing about which the type bars 8 may pivot as they are moved to strike

the platen 12, when a given one of the pull bars such as 9 is moved to the right.

The ends 9' of all the pull bars normally rest upon the upper surfaces of a set of code bars 13. These code bars have notches (not shown) in their tops, and are capable of transverse movement with respect to the ends of the pull bars in accordance with various code combinations. Each code combination brings one of the notches in each of the code bars 13 into alinement with corresponding notches of other code bars, so that the end 9' of the pull bar can drop into the alined notches. The pull bar thus selected drops down so that a shoulder 9'' engages the pull bar bail 14 which is attached to a pull bar bail plunger 15 movable between two roller guides 16 and 17. After the pull bar is selected, a rocker arm 18 is actuated to move in a clockwise direction, and by its engagement with the roller 19 carried on the underside of the plunger 15, the plunger and the pull bar bail 14 are moved from left to right, thereby shifting the selected pull bar from left to right. The pull bar through its toothed engagement with the type bar swings the corresponding type bar about the bearing rod 11, so that the engaging face of the type bar will strike against the platen 12. The spring 20 restores the pull bar to its normal position when the rocker arm 18 returns in a counterclockwise direction to its normal position.

The platen 12 is mounted between side frame members 21, which are arranged to swing about a pivot 22 under the control of a lever 23 thereby shifting the platen 12 up and down from its letters position to its figures position and vice versa. In Fig. 1 the platen 12 is shown in its letters position. The sheet of paper 24 upon which the printing operation takes place is carried over a guide 25 and passes around the platen 12 between the platen and the rollers 26 and 27, finally passing out of the machine under the tear-off bar 28. A ribbon spool cup 29 is mounted upon the type bar carriage by elements not shown and carries a ribbon spool 30. As typing takes place the ribbon 31 is fed from this spool step by step between the paper 24 and a type bar such as 8, which is being operated to type the character.

The mechanism by which the ribbon 31 is carried in front of the platen is better shown in Figs. 4 and 6. From these views it will be seen that the ribbon 31 is fed from the spool 30 and passes around a rod 32 and through guides 33 and 34 of a ribbon shield 35 carried by a ribbon shield support 36. After passing through the ribbon shield, as above described, the ribbon is wound upon another spool (not shown). The ribbon shield is provided with members 37 and 38 which engage with arms 39 and 40 carried by a ribbon shield guide 41 mounted upon some suitable element of the frame (not shown).

At its lower end the support 36 for the ribbon shield 35 is pivotally attached at 42 to a ribbon oscillator lever 43. Said lever 43 is pivoted at 44 to the end of a ribbon shift lever 44', which is pivoted at 45 to a suitable portion of the frame 46 of the type carriage. The ribbon shift lever 44' carries a roller 47 which rests beneath a slide bar 48 mounted between the side frames 21 of the platen, as shown in Fig. 3. By means of a coiled spring 49 the ribbon shift lever 44' is pulled about the pivot 45 to hold the roller 47 firmly in engagement with the lower side of the slide bar 48. The ribbon oscillator lever 43 carries an arm 50 which is fixed thereto and extends down to the rear of a lug 51 carried by the pull bar bail plunger 15.

The ends 52 and 53 of a spring coiled about the pivot 44 tend to maintain the levers 43 and 44' in the position shown in Fig. 4. The lever 44' is held from rising further by means of the engagement of the roller 47 with the slide bar 48. The lever 43 is prevented from swinging further upwardly about the pivot 44 by the engagement of the lever 50 carried thereby with the lug or stop 51 on the plunger 15. This holds the ribbon 31 in the position shown in Fig. 4. The entire ribbon shift and controlling mechanism shown in Figs. 4 and 6 is movable laterally as the type carriage shifts laterally with respect to the platen, the roller 47 bearing on the underside of the slide bar 48 as the type carriage moves step by step during successive typing operations.

By means of this ribbon controlling mechanism the ribbon is caused to be shifted up and down under several different conditions. For example, during each printing operation the ribbon 31, which is normally held in the position shown in Fig. 4, so that it will be below the character last printed and thus will permit the operator to see the printed characters on the paper, is shifted upwardly to bring the ribbon between the type bar and the platen.

This is accomplished through the agency of the pull bar bail plunger 15 which is moved from left to right in Fig. 4 each time a printing operation takes place. As the lug 51 carried by the plunger 15 moves to the right, the lever 50 under the pressure of the spring arm 52 follows the lug 51 to the right, and this causes the ribbon oscillator lever 43 to swing upwardly about its pivot 44 and thus raise the ribbon into the printing position, the ribbon being pulled down again to display the type character when the plunger 15 is returned to its normal position. During this action the ribbon shift lever 44' remains stationary with the roller 47 resting against the slide bar 48 under the tension of the spring 49. This operation takes place each time a character is printed.

There is also another condition under which the ribbon 31 is shifted up and down. As is well known, type bars, such as 8 in Figs. 7 and 8, are provided with upper and lower case characters 54 and 55. For printing letters or other lower case characters the platen 12 will be in the position shown in Figs. 2 and 7, so that when the ribbon 31 is shifted upwardly during the printing operation, as described in the previous paragraph, it will lie between the lower case type 55 and the platen. Consequently when the platen is struck the character 55 will be printed on the sheet of paper 24. Under these conditions the character 54 will not engage either the ribbon 31 or the platen 12.

When it is desired to print an upper case character, the side frame 21 carrying the platen 12 (see Fig. 2) is shifted upwardly about the pivot 22 by the lever 23, so that the printing point of the platen is brough in front of the upper case character 54 as shown in Fig. 8. As the platen 12 swings up to this position, the slide bar 48 is correspondingly elevated in the following manner. As the roller 47 follows the slide bar 48 upwardly, the lever 44' swings about the pivot 45 under the pull of the spring 49 and carries the ribbon oscillator lever 43 upwardly with it. The latter is substantially prevented from swinging around its pivot 41 by the engagement of the lever 50 with the lug 51 on the plunger 15. This elevation of levers 44' and 43 causes the ribbon

31, as shown in Fig. 8, to be elevated to a point between the upper case character 54 and the platen.

This action takes place each time there is a shift from lower case to upper case, and the fulcruming action of the levers 43 and 44' are so related that printing in the upper case position takes place at substantially the same position between the two edges of the ribbon for both upper and lower case printing. For example, as shown in Figs. 7 and 8, the characters are printed in both cases near the upper edge of the ribbon 31. In other words, as shown in Fig. 9 the engagement of the type with the ribbon 31 will be along the dotted line 56. As is well known, the ribbon is slowly unwound from one spool and wound up on the other, thus passing through the ribbon shield 35 by short steps each time a character is typed. The mechanism for thus shifting the ribbon is well known, and is not herein shown as it forms no part of the present invention.

As earlier stated, it is desirable that instead of having the type strike the ribbon along a single line parallel to its edges some arrangement be made whereby the type at various times will strike at various places not only along the length of the ribbon but up and down between the upper and lower edges thereof. This is accomplished in accordance with the present invention by having the underside of the slide bar 48 tapered as shown in Figs. 1 and 3. Consequently the roller 47 moves along the slide bar as the type carriage is stepped from left to right during the operations of printing a line of type, and the lever combination 43, 44' swings about the pivot 45 with the right-hand end of lever 43 (see Fig. 4) gradually shifting downward as the roller 48 is forced downward.

The result of this is that at the beginning of a line the ribbon will be in the elevated dotted line position shown in Figs. 4, 7 and 8 at the beginning of the line, and will gradually be shifted downwardly to its full line position when the roller 47 arrives at the right-hand or thickened end of the slide bar 48. In consequence, as the successive characters are impressed against the ribbon and the ribbon is fed through the ribbon shield, the sucessive points of contact between the type and the ribbon may run along a diagonal line such as 57, as shown in Fig. 9.

For example, the first character may be printed at the level indicated by 58. The next character, assuming that the ribbon is gradually being stepped from right to left for each typing operation will strike the ribbon at the right and a little above 58, and so on until the last type strikes the ribbon at the point 59. The carriage is then restored to its initial position to print a new line. This immediately shifts the ribbon to its dotted line position as shown in Figs. 4, 7 and 8, and the next line starts at point 60. The ribbon is successively struck by the type along the line 61 with the result that the last character typed will strike the ribbon at point 62 and so forth.

Finally as we approach the end of the ribbon, or in other words, the point at which the ribbon reverse mechanism (not disclosed) causes the ribbon which is now wound up on one spool to be unwound and shifted to the other spool, another action takes place. Let us assume that near the end of the ribbon the type is successively striking the ribbon along the line 63, and at 64 the carriage is returned and the type then commences striking along the line 65 until the point 66 is reached. Let us assume that just at the point 66 the ribbon reverse mechanism comes into play and causes the ribbon to feed through the ribbon shield from left to right. The direction of typing along the ribbon being now reversed, the successive typing points will travel from point 66 along the diagonal line 67 until the point 68 is reached at the end of the line. Here the carriage is returned and the typing along the ribbon commences at 69 and follows along the line 70 to point 71, etc.

Thus it will be seen that the type strikes the ribbon along lines extending on a bias with respect to the ribbon itself, and these lines are pitched oppositely as the direction of movement of the ribbon is reversed. There is, therefore, a greater spread of the type impressions on the ribbon as shown in Fig. 9. However, as the ribbon is successively fed back and forth, the positions of these diagonal lines are gradually shifted along the length of the ribbon, due to the stretching of the ribbon, to the different degrees of tautness at which it is wound upon the spool, and to other unpredictable mechanical factors. This ultimately results in the entire area of the ribbon between the line 56 and the line extending through the points 58, 60, etc., being struck by the type at various times. The effect is as though the diagonal lines 57, 61, 63, etc., gradually shifted to the right or to the left with successive reversals of the direction of feeding of the ribbon. The wear and tear upon the ribbon is accordingly distributed over an entire area instead of over one line 56, with the result that the ribbon will last much longer.

It will be noted that the distance between the line 56 and the line passing through points 58, 60, etc., is much greater than the vertical distance that the roller 47 is moved up and down as it rolls along the inclined part of the slide bar 48. This increase in the distance covered on the ribbon is due to the fact that the lever combination 43, 44', pivoting about point 45 with the fulcrum at the edge of the roller 47, has a magnifying action with respect to the end 42 of the lever 43, and causes a much greater vertical traverse of the ribbon than the vertical traverse of the roller 47.

If desired, the slide bar, in addition to being tapered longitudinally, may also be tapered along its width to vary its thickness along the line 72, as shown in Fig. 5. By so doing, when the platen moves from letters to figures, it raises the slide bar 48 upwardly and the roller 47 moves along the surface 72. This combined shift action results in a movement of the ribbon equal to that of the platen, due to the compensating effect of the tapering along the width of the slide bar as shown at 72 in Fig. 5.

It will be obvious that the general principles herein disclosed may be embodied in many other organizations widely different from those illustrated without departing from the spirit of the invention as defined in the following claims.

What is claimed is:

1. In a typing mechanism, a platen, typing means to type characters against said platen, said platen and typing means being movable longitudinally with respect to each other as successive characters are printed, a type ribbon, means to gradually feed said ribbon longitudinally with respect to the point at which the type strikes said platen, a longitudinal member lying parallel to said platen, said member having a tapered surface, and lever means riding upon said tapered surface to gradually shift said ribbon in a vertical

plane as said platen and typing means move with respect to each other during the printing of each line of characters, thereby spreading the wear of the ribbon due to the impact of printing over a wider area thereof.

2. In a typing mechanism, a platen, typing means to type characters against said platen, said platen and typing means being movable longitudinally with respect to each other as successive characters are printed, a type ribbon, a ribbon shield to hold said ribbon in position with respect to said platen, means to gradually feed said ribbon longitudinally through said shield with respect to the point at which the type strikes said platen, a longitudinal member lying parallel to said platen, said member having a tapered surface, means to shift said shield in a vertical plane in changing from upper case to lower case printing, said means including lever means riding upon said tapered surface to gradually shift said ribbon in a vertical plane as said platen and typing means move with respect to each other during the printing of each line of characters, thereby spreading the wear of the ribbon due to the impact of printing characters over a wider area thereof.

3. In a typing mechanism, a platen, typing means to type characters against said platen, said platen and typing means being movable longitudinally with respect to each other as successive characters are printed, a type ribbon, a ribbon shield to hold said ribbon in position with respect to said platen, means to gradually feed said ribbon longitudinally through said shield with respect to the point at which the type strikes said platen, a longitudinal member lying parallel to said platen, said member having a tapered surface, means to shift said shield in a vertical plane to remove the ribbon from over the printed character as each character is printed, said means including lever means riding upon said tapered surface to gradually shift said ribbon in a vertical plane as said platen and typing means move with respect to each other during the printing of each line of characters, thereby spreading the wear of the ribbon due to the impact of printing characters over a wider area thereof.

4. In a typing mechanism, a platen, typing means to type characters against said platen, said platen and typing means being movable longitudinally with respect to each other as successive characters are printed, a type ribbon, a ribbon shield to hold said ribbon in position with respect to said platen, means to gradually feed said ribbon longitudinally through said shield with respect to the point at which the type strikes said platen, a longitudinal member lying parallel to said platen, said member having a tapered surface, a lever having said tapered surface as its fulcrum, means operating said lever to shift said shield in a vertical plane in changing from upper case to lower case printing, said lever operating as its fulcrum moves along said tapered surface to gradually shift said ribbon in a vertical plane as said platen and typing means move with respect to each other during the printing of each line of characters, thereby spreading the wear of the ribbon due to the impact of printing characters over a wider area thereof.

5. In a typing mechanism, a platen, typing means to type characters against said platen, said platen and typing means being movable longitudinally with respect to each other as successive characters are printed, a type ribbon, a ribbon shield to hold said ribbon in position with respect to said platen, means to gradually feed said ribbon longitudinally through said shield with respect to the point at which the type strikes said platen, a longitudinal member lying parallel to said platen, said member having a tapered surface, a lever having said tapered surface as its fulcrum, means operating said lever to shift said shield in a vertical plane to remove the ribbon from over the printed character as each character is printed, said lever operating as its fulcrum moves along said tapered surface to gradually shift said ribbon in a vertical plane as said platen and typing means move with respect to each other during the printing of each line of characters, thereby spreading the wear of the ribbon due to the impact of printing characters over a wider area thereof.

6. In a typing mechanism, a platen, typing means to type characters against said platen, said platen and typing means being movable with respect to each other as successive characters are printed, a type ribbon, a ribbon shield to hold said ribbon in position with respect to said platen, means to gradually feed said ribbon longitudinally through said shield with respect to the typing point on said platen, a lever movable about a fulcrum to shift said shield in a vertical plane in changing from upper case to lower case printing, said fulcrum comprising a tapered slide bar along which said lever is moved as successive characters are printed, said slide bar being inclined with respect to the plane of movement of the platen and typing means with respect to each other, whereby the fulcrum of said lever is gradually changed to cause said lever to gradually shift said ribbon in a vertical plane during the printing of each line of characters to spread the wear of the ribbon due to the impact of printing characters over a wider area thereof.

LUCIAN EMMANUEL BORDONARO.