US00D409597S

United States Patent [19]

Rosen

[11] Patent Number: Des. 409,597

[45] Date of Patent: ** May 11, 1999

[54] **RETRACTABLE MONITOR SYSTEM**

[75] Inventor: **John B. Rosen**, Eugene, Oreg.

[73] Assignee: **Rosen Product Development, Inc.**, Eugene, Oreg.

[**] Term: **14 Years**

[21] Appl. No.: **29/083,017**

[22] Filed: **Feb. 2, 1998**

Related U.S. Application Data

[63] Continuation of application No. 29/066,478, Feb. 6, 1997, Pat. No. Des. 390,219.

[51] **LOC (6) Cl.** **14-03**

[52] **U.S. Cl.** **D14/132**; D14/113

[58] **Field of Search** D14/113, 124–134; D6/513; D8/380; D12/345, 415, 418; D16/235; D19/60; D24/158; 108/44, 137; 244/118.5; 248/917–924; 312/7.2; 340/995; 345/905; 348/148, 825, 827, 836–838, 840

[56] **References Cited**

U.S. PATENT DOCUMENTS

D. 332,715	1/1993	Sedighzadeh et al. .	
D. 365,951	1/1996	Walters, III .	
4,504,910	3/1985	Araki et al. .	
4,630,821	12/1986	Greenwald .	
4,814,759	3/1989	Gombrich et al.	345/905 X
4,836,486	6/1989	Vossoughi et al. .	
5,064,161	11/1991	Anderson .	
5,076,524	12/1991	Reh et al. .	
5,096,271	3/1992	Portman .	
5,145,128	9/1992	Umeda .	
5,148,282	9/1992	Sedighzadeh .	
5,161,028	11/1992	Kawata et al. .	
5,177,616	1/1993	Riday .	
5,179,367	1/1993	Shimizu .	
5,195,709	3/1993	Yasushi .	
5,311,302	5/1994	Berry et al. .	
5,362,144	11/1994	Shioya et al. .	
5,459,893	10/1995	Walters, III .	
5,501,042	3/1996	Gustaveson et al. .	
5,547,248	8/1996	Marechal .	
5,743,487	4/1998	Rice	244/118.5 X

Primary Examiner—Ted Shooman
Assistant Examiner—Richelle Shelton
Attorney, Agent, or Firm—Kolisch, Hartwell, Dickinson, McCormack & Heuser

[57] **CLAIM**

The ornamental design for a retractable monitor system, as shown and described.

DESCRIPTION

FIG. **1** is an isometric view of a retractable monitor system showing my new design, the monitor being depicted in a stowed orientation;

FIG. **2** is an isometric view of the monitor system of FIG. **1**, but showing the monitor in a display orientation;

FIG. **3** is a right-side view of the monitor system with the monitor in the display orientation;

FIG. **4** is left-side view of the monitor system with the monitor in the stowed orientation;

FIG. **5** is a top view of the monitor system with the monitor in the stowed orientation;

FIG. **6** is a right-side view of the monitor system with the monitor in the stowed orientation;

FIG. **7** is a bottom view of the monitor system with the monitor in the stowed orientation;

FIG. **8** is a front view of the monitor system with the monitor in the stowed orientation; and,

FIG. **9** is a rear view of the monitor system with the monitor in the stowed orientation.

The broken line showing in FIGS. **1–9** is to define boundaries and forms no part of the claimed design.

1 Claim, 3 Drawing Sheets

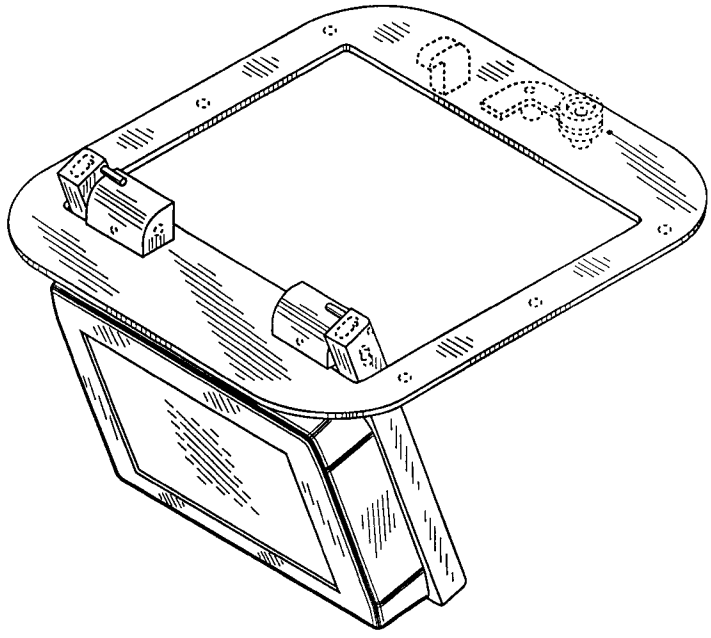

FIG. 1

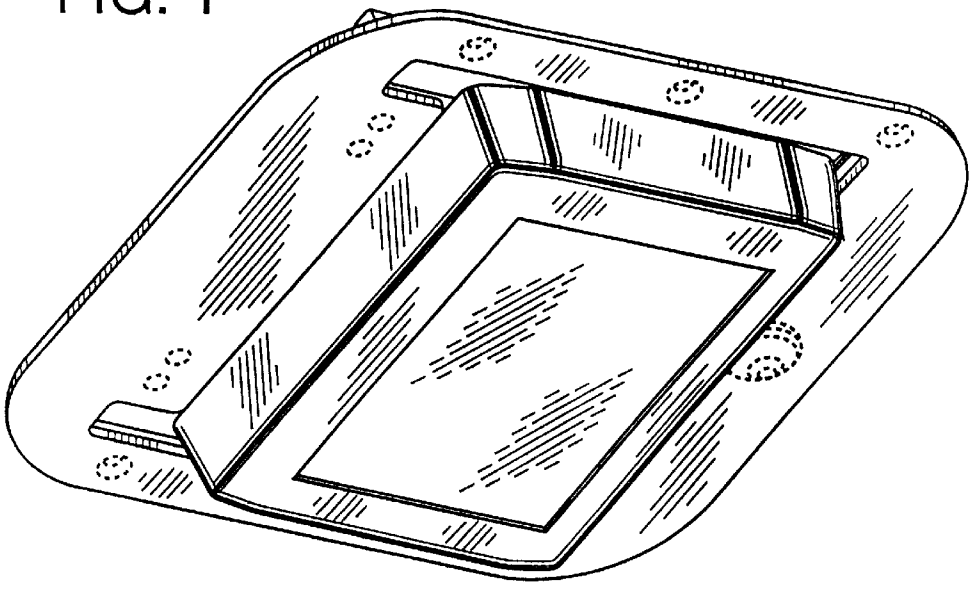

FIG. 2

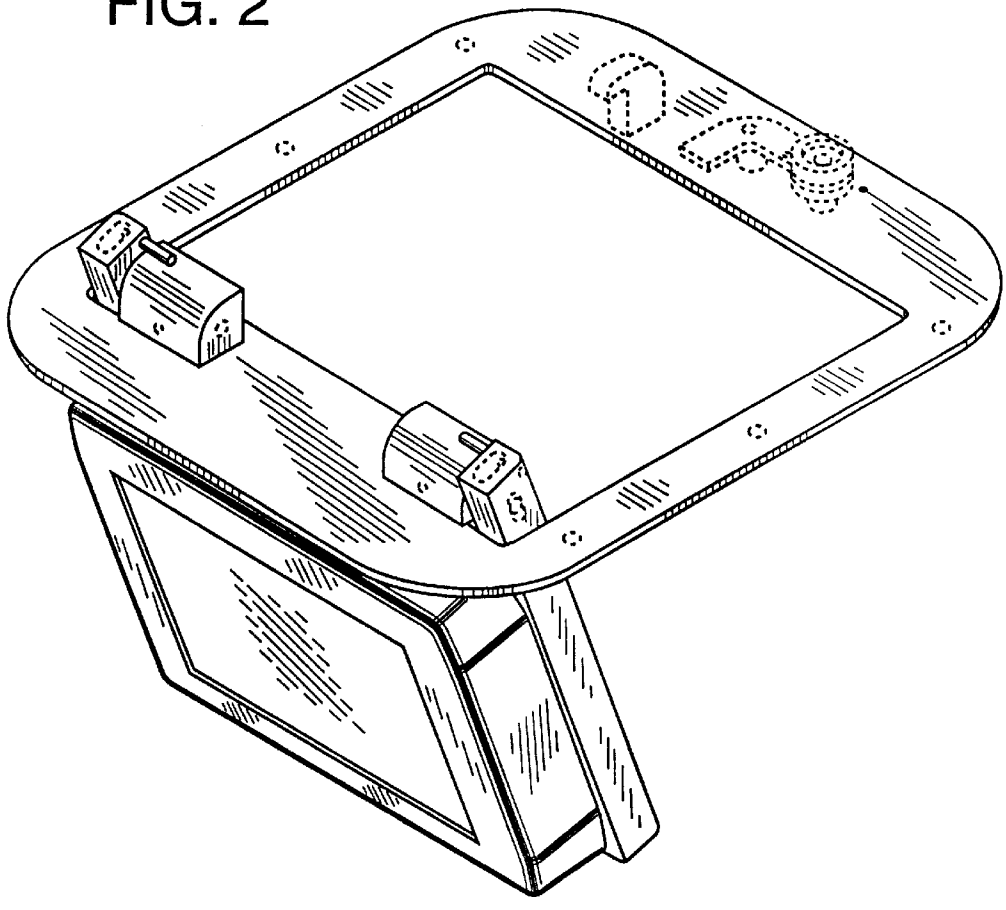

FIG. 3

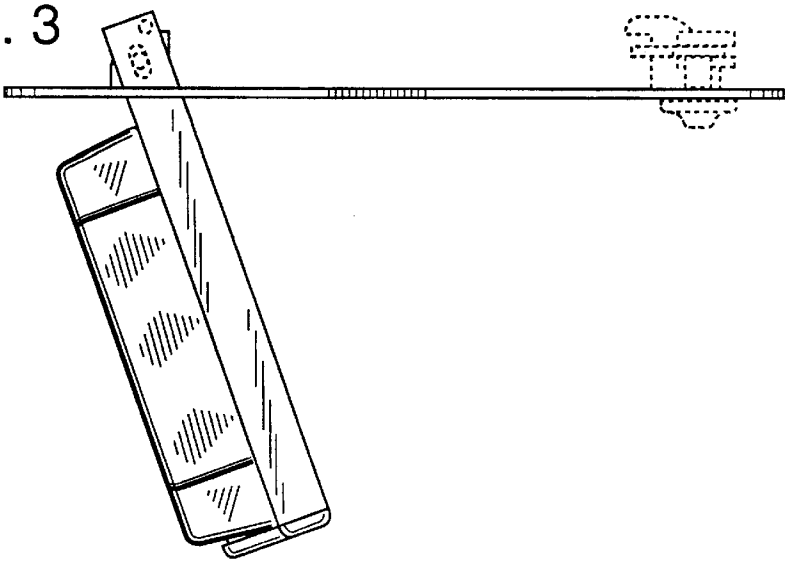

FIG. 4

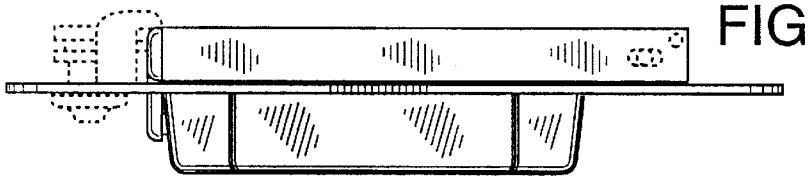

FIG. 5

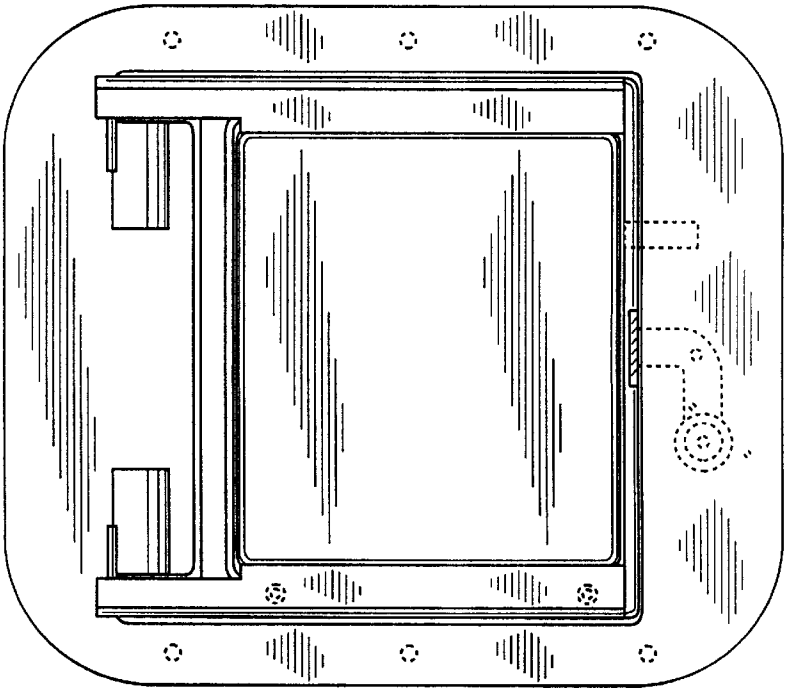

FIG. 6

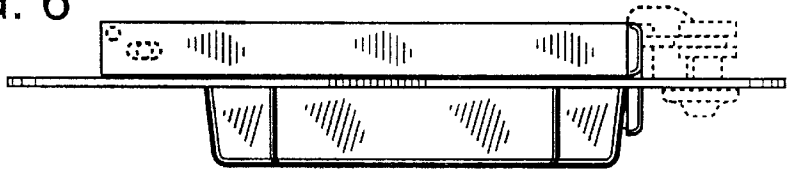

FIG. 7

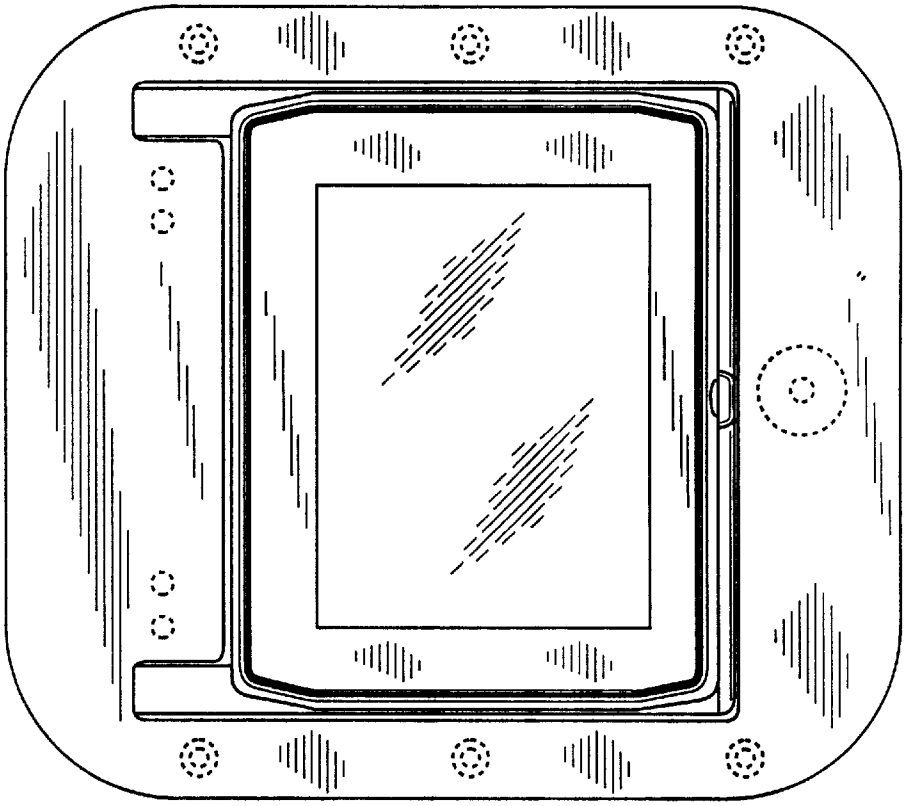

FIG. 8

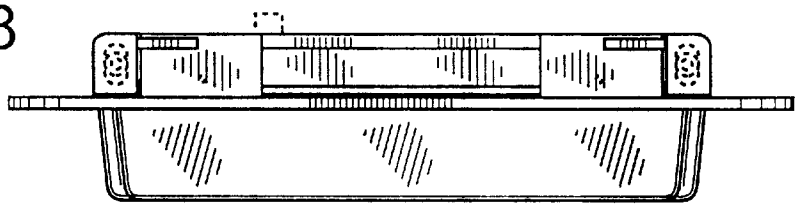

FIG. 9

