(12) INTERNATIONAL APPLICATION PUBLISHED UNDER THE PATENT COOPERATION TREATY (PCT)

(19) World Intellectual Property Organization
International Bureau

(43) International Publication Date
15 September 2005 (15.09.2005)

PCT

(10) International Publication Number
WO 2005/084176 A2

(51) International Patent Classification: Not classified

(21) International Application Number:
PCT/US2004/033887

(22) International Filing Date: 15 October 2004 (15.10.2004)

(25) Filing Language: English

(26) Publication Language: English

(30) Priority Data:
10/686,894 15 October 2003 (15.10.2003) US

(71) Applicant *(for all designated States except US)*: **PI-COSYS, INC.** [US/US]; Building C, 35 South La Patera Lane, Santa Barbara, CA 93117 (US).

(72) Inventor; and

(75) Inventor/Applicant *(for US only)*: **KARAM, Raymond, Miller, II** [US/US]; 226 East Junipero, Santa Barbara, CA 93105 (US).

(74) Agents: **HAMRICK, Claude, A., S.** et al.; Burns, Doane, Swecker & Mathis, LLP, P.O. Box 1404, Alexandria, VA 22313-1404 (US).

(81) Designated States *(unless otherwise indicated, for every kind of national protection available)*: AE, AG, AL, AM, AT, AU, AZ, BA, BB, BG, BR, BW, BY, BZ, CA, CH, CN, CO, CR, CU, CZ, DE, DK, DM, DZ, EC, EE, EG, ES, FI, GB, GD, GE, GH, GM, HR, HU, ID, IL, IN, IS, JP, KE, KG, KP, KR, KZ, LC, LK, LR, LS, LT, LU, LV, MA, MD, MG, MK, MN, MW, MX, MZ, NA, NI, NO, NZ, OM, PG, PH, PL, PT, RO, RU, SC, SD, SE, SG, SK, SL, SY, TJ, TM, TN, TR, TT, TZ, UA, UG, US, UZ, VC, VN, YU, ZA, ZM, ZW.

(84) Designated States *(unless otherwise indicated, for every kind of regional protection available)*: ARIPO (BW, GH, GM, KE, LS, MW, MZ, NA, SD, SL, SZ, TZ, UG, ZM, ZW), Eurasian (AM, AZ, BY, KG, KZ, MD, RU, TJ, TM), European (AT, BE, BG, CH, CY, CZ, DE, DK, EE, ES, FI, FR, GB, GR, HU, IE, IT, LU, MC, NL, PL, PT, RO, SE, SI, SK, TR), OAPI (BF, BJ, CF, CG, CI, CM, GA, GN, GQ, GW, ML, MR, NE, SN, TD, TG).

Declarations under Rule 4.17:

— *as to applicant's entitlement to apply for and be granted a patent (Rule 4.17(ii)) for the following designations AE, AG, AL, AM, AT, AU, AZ, BA, BB, BG, BR, BW, BY, BZ,*

[Continued on next page]

(54) Title: DIRECT-WRITE SYSTEM AND METHOD FOR ROLL-TO-ROLL MANUFACTURING OF REFLECTIVE GRATINGS

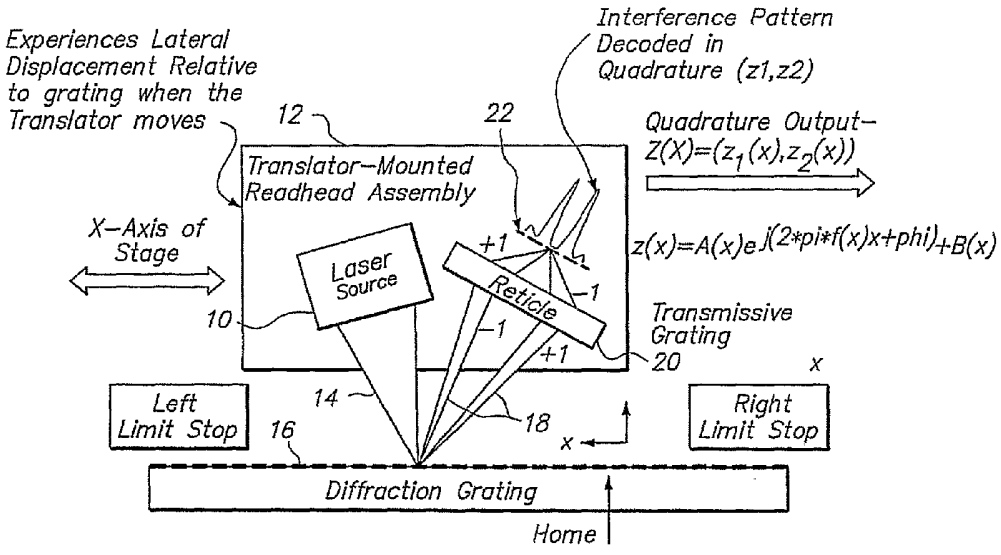

(57) Abstract: A reflective grating for precision location measurement is disclosed. In one embodiment, the reflective grating has a non-reflective substrate and a non- reflective adhesion layer disposed on the substrate layer. A reflective surface layer is disposed on the adhesion layer. In another embodiment, the reflective grating is manufactured on the reflective (polished) surface of a monolithic substrate. A series of grating lines are formed in the reflective surface layer by vaporizing portions of the reflective surface layer with a laser in order to expose the non-reflective adhesion layer. Accordingly, alternating reflective and non reflective grating lines are formed that are used for making precision measurements.

WO 2005/084176 A2

CA, CH, CN, CO, CR, CU, CZ, DE, DK, DM, DZ, EC, EE, EG, ES, FI, GB, GD, GE, GH, GM, HR, HU, ID, IL, IN, IS, JP, KE, KG, KP, KR, KZ, LC, LK, LR, LS, LT, LU, LV, MA, MD, MG, MK, MN, MW, MX, MZ, NA, NI, NO, NZ, OM, PG, PH, PL, PT, RO, RU, SC, SD, SE, SG, SK, SL, SY, TJ, TM, TN, TR, TT, TZ, UA, UG, UZ, VC, VN, YU, ZA, ZM, ZW, ARIPO patent (BW, GH, GM, KE, LS, MW, MZ, NA, SD, SL, SZ, TZ, UG, ZM, ZW), Eurasian patent (AM, AZ, BY, KG, KZ, MD, RU, TJ, TM), European patent (AT, BE, BG, CH, CY, CZ, DE, DK, EE, ES, FI, FR, GB, GR, HU, IE, IT, LU, MC, NL, PL, PT, RO, SE, SI, SK, TR), OAPI patent (BF, BJ, CF, CG, CI, CM, GA, GN, GQ, GW, ML, MR, NE, SN, TD, TG)

— *as to the applicant's entitlement to claim the priority of the earlier application (Rule 4.17(iii)) for all designations*

Published:

— *without international search report and to be republished upon receipt of that report*

For two-letter codes and other abbreviations, refer to the "Guidance Notes on Codes and Abbreviations" appearing at the beginning of each regular issue of the PCT Gazette.

DIRECT-WRITE SYSTEM AND METHOD FOR ROLL-TO-ROLL MANUFACTURING OF REFLECTIVE GRATINGS

Field of the Invention

The present invention relates generally to diffractive gratings and more particularly to a system and method of manufacturing diffractive gratings by directly writing the grating lines onto polished surfaces on monolithic or multilayered substrates with a laser.

Background of the Invention

Industrial automation platforms including industrial robots, machine tools, coordinate measurement machines, semiconductor robots and test/measurement equipment, as well as military fire-control and communication systems such as radar, telescopes, deformable mirror/pointing systems and gun/laser pointing systems, typically employ closed-loop control of linear and rotary translators to achieve sub-micron/sub-microradian precision. In such systems, optical position transducers are used to measure linear and rotary displacements. To achieve the highest resolution, diffraction of coherent light (i.e., from a laser) with a precision grating is used to create the transducer signal. The wavefront diffraction angle sensitivity actually increases with the increasing resolution of the grating by $\sin^{-1}(\lambda/d)$ where λ is the wavelength of light and d is the period of the grating.

Typically, the platforms have translators that are mounted in a serial kinematic arrangement that employ one linear translator for each component of translation. Alternatively, large turrets can be employed for the component of translation. In each case, a grating in the form of a long deformable tape provides precision reference information from which a read head can measure the sub-micron incremental displacements.

Referring to Figure 1, a typical arrangement for a read head 12 and grating 16 is shown. A laser source 10 of a translator-mounted read head 12 generates a transmitted beam 14 of coherent light having a wavelength of about 800 - 1200 nm onto a reflective diffraction grating 16. The read head 12 moves in the x-axis direction of the translator and experiences lateral displacement relative to the

reflective diffraction grating 16 when the translator is moved. The transmitted beam 14 is reflected by the reflective diffraction grating 16 to generate a first ordered pair (+ 1, -1) of a reflected beam 18. The reflected laser beam 18 is transmitted through a reticle 20 that has a grating pitch equal to the reflective diffraction grating 16. The -1 order of the of the transmitted beam 14 derived from the +1 order of the reflected beam 18 and the +1 order of the transmitted beam 14 derived from the -1 order of the reflected beam 18 interfere with one another.

The read head 12 has a photodiode array 22 located at the point of maximum interference between the +1 and -1 orders and decodes the light pattern to generate a quadrature output having two complex signals $Z_1(x)$ and $Z_2(x)$. The complex signals $Z_1(x)$ and $Z_2(x)$ have the form:

$$Z(x) = A(x)e^{j(2\pi x - vdt)} + B(x) \qquad \text{Eq. 1}$$

where: Z, A and B are complex functions of the displacement x between the read head 12 and the grating 16;

the quadrature outputs are the real and imaginary components of Z(x); and

x is the instantaneous spatial frequency of the grating structure and v is the relative velocity of the read head with respect to the grating.

As seen in Figure 2, the two quadrature signals $Z_1(x)$ and $Z_2(x)$ roughly vary sinusoidally with the orthogonal displacement (x) of the read head 12 with respect to the reflective grating 16. The photodiode array 22 combines the light intensity patterns such that $Z_1(x)$ and $Z_2(x)$ are displaced by a phase angle of 90°. By using A/D converters with N bit resolution to quantize the quadrature signals $Z_1(x)$ and $Z_2(x)$, displacements along the x-axis can be measured with a resolution of roughly 1 part in 2^{N+1}. Without initializing the displacement at an absolute reference point, the displacement serves as a relative position with respect to an arbitrary starting point.

In addition to measuring incremental displacement, it is necessary for the control system to employ additional sensors that sense home (i.e., origin of coordinate reference frames) and end-of-travel limits. In more advanced systems, the position transducer (i.e., the read head 12) can be configured to provide absolute

position information or to provide secondary tracks from which the home and end-of-travel limits can be detected.

As such, there is a need for a reflective diffraction grating that can be used with read beads to measure the displacement of industrial platforms. Typically, reflective diffraction gratings are manufactured using a "chrome-on- glass" process and selective etching using photolithographic techniques and "Zerodur" class having a coefficient of thermal expansion (CTE) < 1 ppm/°C. These types of gratings are expensive and require relatively long manufacturing cycles. Furthermore, high tooling costs (e.g., masks) and high capital costs (e.g., vacuum and other sophisticated equipment employed in traditional semiconductor fabrication) are required. With these batch processes, the length of the grating is limited by the size of the chambers used. Therefore, these reflective gratings are expensive to fabricate.

Alternatively, it is possible to machine the gratings into a simple material substrate. The gratings are machined using microreplication or diamond machining techniques that require the substrate to meet broad and disparate material requirements. Accordingly, these machining processes are expensive and time consuming to perform and can suffer cyclic errors every microreplication rotation of the master.

Accordingly, there is a need for a system and method of producing a reflective grating which is quick and economical. Furthermore, there is a need for a process of fabricating diffraction gratings of variable length from centimeters to tens of meters long. The present invention addresses these needs by providing an inexpensive process of manufacturing reflective gratings that employs a laser to write the diffraction pattern onto a polished substrate in a roll-to-roll process thereby avoiding mask costs, machining and high capital investment. In alternate embodiments, the diffraction pattern can be directly written onto polished translator surfaces and/or bearing elements to reduce parts count and assembly time.

Summary of the Invention

In accordance with the present invention, there is provided a reflective diffraction grating for precision location measurement. The diffraction grating has a non-reflective substrate layer and a non-reflective adhesion layer disposed on the

substrate layer. A reflective surface layer is disposed on the adhesion layer. A series of grating lines are formed in the reflective surface layer by removing portions of the reflective surface layer with a laser in order to expose the underlying non-reflective adhesion layer. It is also possible that some of the adhesion layer may be removed with the laser when forming the grating lines. In an alternate embodiment, a polished monolithic substrate may be employed directly in the laser writing. The advantage of the former is that is provides 1.5-2 times the resolution of the monolithic embodiment. The advantage of the latter is reduced cost in relation to the multi-layer embodiment.

Typically, the substrate is a material with a low coefficient of thermal expansion and is a good absorber of IR radiation. Invar or Super Invar are ideal low CTE materials. However, other IR absorbing substrate materials may be substituted without loss of functionality. The adhesion layer is deposited on the substrate and is a material such as nickel that also absorbs IR radiation and removes surface imperfections in the substrate. Such imperfections (e.g., scratches and indentations) are common in Invar, Super Invar and other ideal substrate materials. The surface layer is deposited on the adhesion layer and is a good reflector of IR radiation such as gold. By removing the surface layer to expose the underlying adhesion layer, alternating bands of reflective and non- reflective surfaces are created thereby creating the diffraction grating.

The diffraction grating may further include a contact adhesive layer for adhering the diffraction grating to desired objects. The contact adhesive layer is applied to a side of the substrate opposite the adhesion layer and surface layer. The contact adhesive layer provides an easy method of affixing the diffraction grating to stationary (e.g., mounting plate or stator) or moving (e.g., rotor) reference surfaces.

A method of forming a diffraction grating from a tape having a non-reflective substrate layer, a non-reflective adhesion layer and a reflective surface layer is disclosed. The diffraction grating is formed by vaporizing portions of the surface layer with a laser in order to create the grating lines of the diffraction grating. In the preferred embodiment, the laser is a high frequency laser that generates a pulse that is power loaded in the front-end and vaporizes the surface layer rather than ablating it.

A system for forming a diffraction grating has a feed roll having a tape rolled thereon. The tape has a non-reflective substrate layer, a non-reflective adhesion layer, and a reflective surface area bonded together. A drive roller retrieves the tape from the feed roll. A laser station vaporizes the surface layer in order to create the grating lines. A take up reel rolls the tape after being processed by the laser station. The system can further include a read head for verifying whether the grating lines are properly formed after vaporization by the laser station. A contact adhesive feed roll has a supply of contact adhesive tape that is applied to the side of the substrate opposite the adhesion and surface layers.

Brief Description of the Drawing Figures

These, as well as other features of the present invention, will become more apparent upon reference to the drawings wherein:

Figure 1 is a system block diagram illustrating how a diffraction grating system measures position information;

Figure 2 is a graph showing the two signals generated by a read head of the diffraction grating system shown in Figure 1;

Figure 3 illustrates a reflective diffraction grating of the present invention;

Figure 4 illustrates an auxiliary track of the diffraction grating shown in Figure 3;

Figure 5 is a system block diagram illustrating how the auxiliary track of the diffraction grating is read;

Figure 6 is a system block diagram showing a system for manufacturing the diffraction grating of the present invention;

Figure 7 is a graph showing how the power of the laser is distributed;

Figure 8 is a graph showing how a read head can verifying the accuracy of a diffraction grating created with the system shown in Figure 6; and

Figure 9 is a block diagram showing the process control system used with the system shown in Figure 6.

Detailed Description of the Invention

Referring now to the drawings wherein the showings are for purposes of illustrating preferred embodiments of the present invention only, and not for purposes of limiting the same, Figure 3 illustrates a reflective diffraction grating 24 constructed in accordance with the present invention. The diffraction grating 24 has a substrate 26 made from a material with a low coefficient of thermal expansion (CTE) and low reflectivity. In this regard, the substrate 26 is a strong absorber of infrared radiation (IR). It is possible to use Invar or Super Invar as the substrate 26. If Super Invar is used, then the substrate 26 has a thickness of about 125 microns and a CTE of about 0.1 ppm/°C while absorbing 90% of the radiation in the 800-1200 nm band. It is also possible to use silicon as the substrate 26 if the grating patterns are written onto disks rather than linear strips.

Bonded to the substrate 26 is an adhesion layer 28 that is a strong absorber of IR. The adhesion layer 28 may, if plated, smooth out surface imperfections (i.e., roughness, scratches) created by the rolling processes that creates the substrate 26. The adhesion layer 28 is as thick as necessary to smooth out surface imperfections if plated. Otherwise, the adhesion layer 28 is as thin as possible when deposited using sputtering or vacuum deposition processes. In the preferred embodiment, the adhesion layer is between 1-3 microns thick and is deposited onto the substrate. Typically nickel is used for the adhesion layer 28.

Disposed on the adhesion layer 28 is a reflective surface layer 30 that is a strong reflector of IR radiation. The surface layer 30 is about 0.1 microns thick and is deposited onto the adhesion layer 28. Typically the surface layer is gold. Materials other than gold can also be used for the surface layer 30. A photo-imagable metal oxide deposition could also be applied. The surface layer would be exposed by a laser and then via an etching process the non-exposed portions could be washed away. Alternatively, nanostructured metal coatings could be layered onto the substrate 26. Then, the reflective bands could be imaged, melted and fused to the substrate. The non-exposed material could then be washed away.

Additionally, a surface tape such as Mylar could be applied to the surface layer 30 prior to laser machining. The surface tape would keep the surface layer 30 clean and could provide better edge definition of grating lines. Furthermore, the

surface tape could protect the surface layer 30 during rolling and shipping of the diffraction grating 24.

An optional contact adhesive 36 in the form of a tape is applied to a side of the substrate 26 opposite the surface layer 30. The contact adhesive 36 may be discontinuous, glass bead filled epoxy. The contact adhesive 36 is used to secure the substrate 26 of the diffraction grating 24 to a desired location.

The diffraction grating 24 further includes a series of absorbing grating lines 32 formed into the surface layer 30 and all or some of the adhesion layer 28. As will be further discussed below, the grating lines 32 are formed by removing generally rectangular segments of the surface layer 30 and underlying portions of the adhesion layer 28. Each of the grating lines 32 is about 0.1 - 8 microns in depth. The pitch of the grating lines 32 (i.e., distance between adjacent grating lines) ranges from 1 - 100 microns with a duty cycle of 50%. Accordingly, the width of the grating lines 32 is about equal to the width of the material remaining between grating lines 32.

As seen in Figure 3, the diffraction grating 24 is formed as lines/bands orthogonal to the x-axis of the tape surface. Each of the grating lines 32 is formed by removing the surface layer 30 and underlying portions of the adhesion layer 28 in a direction generally orthogonal to the x-axis. The length of each grating line 32 in the direction orthogonal to the x-axis is about the width of the substrate 26. The grating lines 32 formed in the x-axis direction define a position track 34 that is used in position measurement. Because the reflective surface layer 30 has been removed to expose the adhesion layer 28, as well as the substrate 26, each grating line 32 will absorb IR, while the remaining surface layer 30 reflects IR.

Also formed alongside the position track 34 is an auxiliary track 38 that is used to encode absolute position information. The auxiliary track 38 is a pseudo-random binary sequence formed into the surface layer 30 in the same manner as the position track 34. The auxiliary track 38 may be spaced away from the position track 34 as shown in Figure 3, or can be implemented as a spatially-varying modulation (binary or otherwise) of the length of the grating lines 32. Typically, the binary modulation pattern of the auxiliary track 38 is synchronous and in phase with the position track 34.

Referring to Figure 4, the modulation pattern of the auxiliary track 38 forms "1's" and "0's". The width along the x-axis of the binary "1's" and "0's" is set to be several times (e.g., 4 - 5 times) larger than the laser spot size of the read head. The binary pattern may be Manchester encoded to be synchronous with a spatial sampling interval that is an integer number of grating periods to ensure that the auxiliary track 38 is constantly modulated even in the cases of long strings of "1s" and "0's". The use of a well known pseudo-random sequence of the binary pattern guarantees that the sequence of "1's" and "0's" for the auxiliary track 38 will not repeat for extremely long sections of the diffraction grating 24.

In order to read the absolute position along the diffraction grating 24, the system that controls the linear (or rotary) translator over the grating 24 would execute a calibration sequence prior to "fully automatic" operation. Referring to Figure 5, the read head 12 directs the beam 14 from laser source 10 onto the auxiliary track 38. The reflected beam 18 is transmitted through reticle (transmissive diffraction grating) 20 and detected by photodiode array 22. In the calibration sequence, the read head 12 would detect the pattern of the auxiliary track 38 as a function of incremental motion along the x-axis. The phase of the binary sampling function would be defined by estimating the phase of the mid point between successive binary transitions. Once this has been achieved, an N-bit sample of the auxiliary track 38 would be acquired through motion of the read head 12. Through either algorithmic or table-lookup techniques, the absolute position (unique binary code) can be determined. Referring to Figure 5, the relative location of a home position 40 (a "safe" location defined by the programmer of the motion control system) and left and right limit stops 42, 44 (left/right end-of-travel defined by the programmer of the motion control system) can be calculated and stored as position offsets either in software or in programmable logic in hardware interlocks of the motion control system.

An alternative scheme may also be employed to determine absolute position of the read head assembly 12 with respect to the diffraction grating 24. A plurality of gratings 32 with slightly different spatial frequencies could be used with identical quadrature decoders. The phase angle of the quadrature signal for the ith track is equal to:

$$\varphi_i = \tan^{-1}(Z_2(x),Z_1(x)) \qquad \text{Eq. 2}$$

By the appropriate choice of spatial frequencies for the N tracks, the vector $\varphi = [\varphi_1,\varphi_2,\varphi_3,\ldots,\varphi_{N-1},\varphi_N]$ can be used to uniquely identify the absolute position once the phase vector of the home position 40 is known. Either a look-up table or algorithm can be used to calculate the absolute position. It will be recognized by those of ordinary skill in the art, that other absolute encoding techniques can be used for encoding absolute position.

The creation of the spatial frequencies of the gratings 32 can be developed in an ad hoc fashion by selecting a spatial frequency such that M periods would yield a given distance L on the grating 24. For instance, the value of M could be chosen such that M/l0 is an integer. Three other tracks would be selected as M+1, M+M/10, M+M/l0+1. Therefore it follows that φ_1 and φ_3 could uniquely define an absolute position x_{13} within one of the ten equal contiguous sub-segments of L. It also follows that φ_2 and φ_4 could uniquely define an absolute position x_{24} within one of the eleven contiguous sub-segments of L. Accordingly, x_{13} and x_{24} could uniquely define the absolute position, x, from x=0 to L, and x_{13} and x_{24} would each have the same value at x=0 and L. It is possible to calculate the probability of incorrectly calculating the absolute position given the signal-to-noise ratio in measurement of the vector φ. The probability can be made arbitrarily small by adding track pairs with unique frequencies until the probability is below a user-defined threshold.

In addition to the forgoing, it will be recognized that other tracks can be written onto the diffraction grating 24 for other purposes. For example, multiple tracks with different grating periods could be written onto the diffraction grating 24 to create a multidimensional vernier effect from which a true absolute encoder can be created. By measuring the grating phase $\varphi_i=\tan^{-1}(IM(Z-B),Re(Z-B))$ on N tracks, it is possible to uniquely determine the absolute position x with multiple laser stations or by slowing down the speed of the tape and writing the extra tracks with the same laser station.

The diffraction grating 24 is created using a "direct-write" control system 46 as shown in Figure 6. The system 46 can create diffraction gratings 24 to customer-

specific lengths, grating periods, and auxiliary track features. The system 46 has a substrate feed roll 48 with tensioner. The substrate 26 with the adhesion layer 28 and surface layer 30 bonded thereto are wound around the substrate feed roll 48 and form a tape 52. A direct drive roller 50 having nanoscale resolution sets the velocity of the tape 52 as it is delivered from the feed roll 48. The direct drive roller 50 has a precision position transducer that enables the tape speed to be controlled down to 1 part per million (ppm). The tape 52 from the direct drive roller 50 is fed over an extremely flat platen 62 that is thermo-electrically cooled and is below a laser station 58 and a read head 60. The platen 62 is precision ground and temperature controlled to ensure a stable processing and measurement environment. As will be further explained below, the laser station 58 creates the grating lines 32 in the tape 52, while the read head 60 verifies that the grating lines 32 are properly spaced. The system 46 further includes a forward tensioner 54 that provides precision tension control of the tape 52 as it passes beneath the laser station 58 and read head 60. A take up reel 56 is used to roll the tape 52 (now diffraction grating 24) into a roll. The feed roll 48 and take up reel 56 are tensioned to maintain a small amount of tension within the tape 52 to ensure that the tape 52 remains flat and is not creased or bent as it travels across platen 62.

The laser station 58 has a Q-switched (355nm) YVO laser 59 that is pulsed at 400 kHz. The Q-switched laser 59 and associated optics deliver laser intensity/fluence that is heavily skewed toward the first 10 - 20 picoseconds of the pulse which vaporizes rather than ablates the surface layer 30 of the tape 52. This allows the laser processing to be performed without an insulating "cover gas" (inert gas) that would increase the operating cost of producing the diffraction grating 24. Optionally, a cover gas could be used to keep the optics clean and to prevent redeposition of constituents.

In the first few hundred picoseconds of the laser pulse (e.g., 7 - 10 nano seconds), the laser vaporizes the surface layer 30 and some or all of the adhesion layer 28 thereby creating the alternating pattern of reflective and absorbing bands. By carefully controlling the energy in each laser pulse, the alternating band structure can achieve the desired 50% duty cycle that is necessary to achieve maximum amplitude. It will be recognized by those of ordinary skill in the art, that other types

of lasers can be used if the laser provides the necessary energy profile to vaporize the surface layer 30.

Referring to Figure 7, the characteristics of the power profile for the laser pulse is shown. As illustrated, the front-end loaded power profile 70 optimally burns off the surface layer 30 and adhesion layer 28 by breaking the bonds linking the atoms within the thin metal films without heating (deforming) the substrate 26. Typically, the front-end power profile 70 is seven times greater than a square wave pulse 72 thereby accelerating the breaking of atomic bonds within the surface layer 30 and adhesion layer 28. Furthermore, the exponential pulse continues the burn off the surface layer 30 and the adhesion layer 28 because the time constant of the pulse is below the thermal time constant of the substrate 26. Alternatively, the laser may also melt portions of the surface layer 30 in order to form the grating lines 32 or the surface layer 30 may be a photo-imagable layer disposed on the adhesion layer 28 and the laser selectively exposes portions of the photo-imagable layer in order to form the grating lines 32.

Either a one or two axis scan head 61 of the laser station 58 directs the beam from the laser along a path defined in the coordinate system of the tape 52. The scan trajectory is synchronized with the tape motion so that the path of the laser spot from the Q-switched laser 59 is invariant (in tape coordinates) with variations in speed of the tape 52. Typically, the scan rate is approximately 250 mm/sec orthogonal to the axis of the tape 52, while the speed of the tape is between 10 - 40 mm/sec. The scan head 61 of the laser station 58 has a precision flexure assembly and actuator with angle feedback to ensure high-fidelity of scan patterns with no lost motion.

The read head 60 provides in-line testing of the diffraction grating 24 in order to determine whether the laser station 58 is writing correctly to the tape 52. The read head 60 will incorporate customer-specific electro-optical components and ride on a movable track in a oscillatory trajectory along the axis of motion of the tape 52. An interferometric reference records the movements of the read head 60. The read head 60 may incorporate a nyquist period sensor for long term accuracy.

While moving in an oscillatory trajectory, the read head 60 measures the analog quadrature signals in real-time to process a vector $\varphi(x,t)=[A(x), B(x), f(x),v(t)]$. By measuring the quadrature signals in this fashion, with different

polarity of velocity across the surface, the grating spatial frequencies across the surface of the tape 52 can be estimated using non-linear filtering techniques (e.g., extended Kalman filter).

Referring to Figure 8, one or both quadrature signals (z_1 and/or z_2) and the position and velocity of the read head 60 as measured by the interferometer are coherently sampled in time as the read head 60 oscillates above the tape 52. Each viewable grating period, i, is observed in both the forward and reverse direction of oscillation. The times t_i^+ and t_i^-, as well as read head positions S_i^+ and S_i^- where the read head 60 samples an identical location within the ith grating period, uniquely provide an estimate of the tape speed as:

$$(S_i^+ - S_i^-) / (t_i^+ - t_i^-) \qquad \text{Eq. 3}$$

Similarly, by measuring the incremental time dt_i^+ and dt_i^- to traverse the ith grating period and measuring the observed grating period P_i^+ and P_i^-, the true grating period P_i can be determined. Therefore, by sampling the plurality of grating periods in view, there are redundant measurements from which the pitch and tape speed can be calculated. For this reason, linear filtering approaches can be used from which optimum estimates of the grating pitch and tape speed can be determined. Deviations of each value from a desired setpoint can be used to adjust the direct drive roller 50 and the scanning speed of the laser in the laser station 58 so as to generate the desired grating period. Variations in grating pitch can be saved in a "signature file" that can be delivered to the customer in the form of an electrically-erasable, programmable, read-only memory (EEPROM) or as an electronic file that can be delivered to the customer along with the diffraction grating 24.

If only a single stationary read head 60 is used, then the frequency of the quadrature signals would be the product of the tape speed and the spatial frequency of the grating. This could potentially yield large unobservable scale errors in the grating phase function $\varphi=\varphi_0+2\pi\int f(x)dx$.

Alternatively, two stationary read heads 60 separated by a known distance d can be used to determine the pitch of the diffraction grating. A nominal phase shift φ_d can be determined from the known distance d. Specifically:

$$\varphi_d=2\pi(d\text{-Integer}(d/\delta_0)*\delta_0)/\delta_0 \qquad \text{Eq. 4}$$

where δ is the nominal pitch (i.e., wavelength) of the grating and where the Integer function yields an integer result that truncates the fractional component of the positive argument.

The phase shift between the quadrature signal pairs from the two read heads would thus be known and would provide a reference signal from which an error signal could be derived once the system has been calibrated per Equation 4 above. Through appropriate control loop compensation, the speed of the direct drive roller 50 can be adjusted so as to drive the actual phase in coincidence with the reference phase.

In addition to the foregoing, the direct write control system 46 also includes a contact adhesive feed roll 66 for applying the optional contact adhesive 36 to the underside of the substrate 26. As previously described, the contact adhesive may also be discontinuous, glass bead filled epoxy. Referring to Figure 6, contact adhesive feed roll 66 contains a roll of contact adhesive 36. An adhesive applicator and tensioner 68 bonds the contact adhesive layer 36 to the underside of the substrate 36 as the tape 52 leaves the forward tensioner 54. In this respect, the contact adhesive 36 is applied to the substrate after passing through the laser station 58 and the read head 60.

Referring to Figure 9, a block diagram of a roll-to-roll process control system 64 is shown. The process control system 64 monitors rotation and tension of the feed roll 48, the direct drive roller 50, the take up reel 56, and the forward tensioner 54. Furthermore, the process control system 64 monitors the temperature of the platen 62 as well as other parameters. The control system 64 is operative to provide control signals to the feed roll 48, direct drive roller 50, forward tensioner 54, take up reel 56, laser station 58 and read head 60 in order to correctly write the grating lines 32 onto the tape 52. Furthermore, the process control system 64 controls the temperature of the platen 62 to reduce distortion and temperature-dependent error sources. The control system 64 also provides real-time statistical process control data-including deviations in grating period, quadrature amplitude and quadrature

phase shift-which achieves the performance of the direct write control system 46. With the statistical process control data, the performance of the direct write control system 46 can be optimized over time.

Additional modifications and improvements of the present invention may also be apparent to those of ordinary skill in the art. In particular, the laser process may be applied directly to polished surfaces on the translator, the translator mounting platform, or on translator bearing elements to reduce assembly cost and parts count within the servo system. The particular combination of parts described and illustrated herein is intended to represent only certain embodiments of the present invention, and is not intended to serve as limitations of alternative devices within the spirit and scope of the invention.

WHAT IS CLAIMED IS:

1. A reflective grating for precision location measurement, the reflective grating comprising:

a non-reflective substrate layer;

an non-reflective adhesion layer disposed on the substrate layer;

a reflective surface layer disposed on the adhesion layer; and

a series of grating lines formed in the reflective surface layer by removing portions of the reflective surface layer to expose the non-reflective adhesion layer.

2. A reflective grating as recited in claim 1 wherein the grating lines are formed by removing portions of the reflective surface layer and the non- reflective adhesion layer.

3. A reflective grating as recited in claim 1 wherein the non- reflective substrate is a material with a low coefficient of thermal expansion.

4. A reflective grating as recited in claim 3 wherein the non- reflective substrate is selected from Invar and Super Invar.

5. A reflective grating as recited in claim 1 wherein the non- reflective substrate is Invar, the non-reflective adhesion layer is nickel, and the reflective surface layer is gold.

6. A reflective grating as recited in claim 1 wherein the grating lines are formed by vaporizing the reflective surface layer with a laser.

7. A reflective grating as recited in claim 1 wherein the grating lines are formed by vaporizing the reflective surface layer and the non-reflective adhesion layer with a laser.

8. A reflective grating as recited in claim 1 further comprising a contact adhesive layer disposed on a side of the substrate opposite the adhesion layer.

9. A reflective grating as recited in claim 1 wherein the reflective surface layer is a photo-imagable layer and the series of grating lines are formed in the reflective surf ace layer by selectively exposing portions of the photo-imagable layer.

10. A reflective grating as recited in claim 1 wherein the grating lines are formed by melting the reflective surface layer with the laser.

11. A reflective grating as recited in claim 1 wherein the grating lines are written onto polished monolithic substrates.

12. A reflecting grating as recited in claim 1 wherein the grating lines are written onto a polished surface on a linear or rotary translator.

13. A reflective grating as recited in claim 1 wherein the grating lines are written onto a polished surface on the bearing element of a linear or rotary translator.

14. A reflective grating as recited in claim 1 wherein the grating lines are written onto a polished surface on the mounting platform of a linear or rotary translator.

15. A method of forming a reflective grating from a tape having a non-reflective substrate layer, a non-reflective adhesion layer, and a reflective surface layer with a laser, the method comprising defining grating lines in the reflective surface layer by vaporizing the reflective surface layer with the laser.

16. A method of forming a reflective grating as recited in claim 15 whereby the substrate is Invar, the adhesion layer is nickel, and the surface layer is gold.

17. A method of forming a reflective grating as recited in claim 15 wherein the non-reflective substrate is a material with a low coefficient of thermal expansion.

18. A method of forming a reflective grating as recited in claim 17 wherein the non-reflective substrate is selected from Invar and Super Invar.

19. A method of forming a reflective grating as recited in claim 15 further comprising vaporizing the surface layer and the adhesion layer in order to define the grating lines.

20. A method of forming a reflective grating as recited in claim 15 further comprising adhering a contact adhesive layer to a side of the substrate opposite the adhesion layer.

21. A method of forming a reflective grating as recited in claim 15 wherein the reflective surface layer is a photo layer and the grating lines are formed in the reflective surface layer by selectively exposing portions of the photo-imagable layer with the laser.

22. A method of forming a reflective grating as recited in claim 15 wherein the grating lines are formed in the reflective surface layer by melting selected portions of the reflective surface layer with the laser.

23. A system for forming a reflective grating from a tape having a substrate, an adhesion layer, and a surface layer, the system comprising:

a feed roll having the tape rolled thereon;

a drive roller for retrieving the tape from the feed roll;

a laser for writing grating lines onto the tape by vaporizing portions of the surface layer to expose the adhesion layer; and

a take-up reel for rolling the tape into a roll after being vaporized by the laser.

24. A system for forming a reflective grating as recited in claim 23 further comprising a read head for verifying that the laser station vaporizes the surface layer.

25. A system for forming a reflective grating as recited in claim 23 further comprising a contact adhesive feed roll for applying a contact adhesive to the substrate.

26. A system for forming a reflective grating as recited in claim 23 wherein the laser is a high-frequency pulsed laser that vaporizes the surface layer.

27. A system for forming a reflective grating as recited in claim 23 wherein the laser also vaporizes the adhesion layer.

28. A system for forming a reflective grating as recited in claim 23 wherein the laser melts the portions of the surface layer to expose the adhesion layer.

29. A system for forming a reflective grating as recited in claim 23 wherein the reflective surface layer is a photo-imagable layer and the grating lines are formed in the surface layer by selectively exposing portions of the photo imagable layer with the laser.

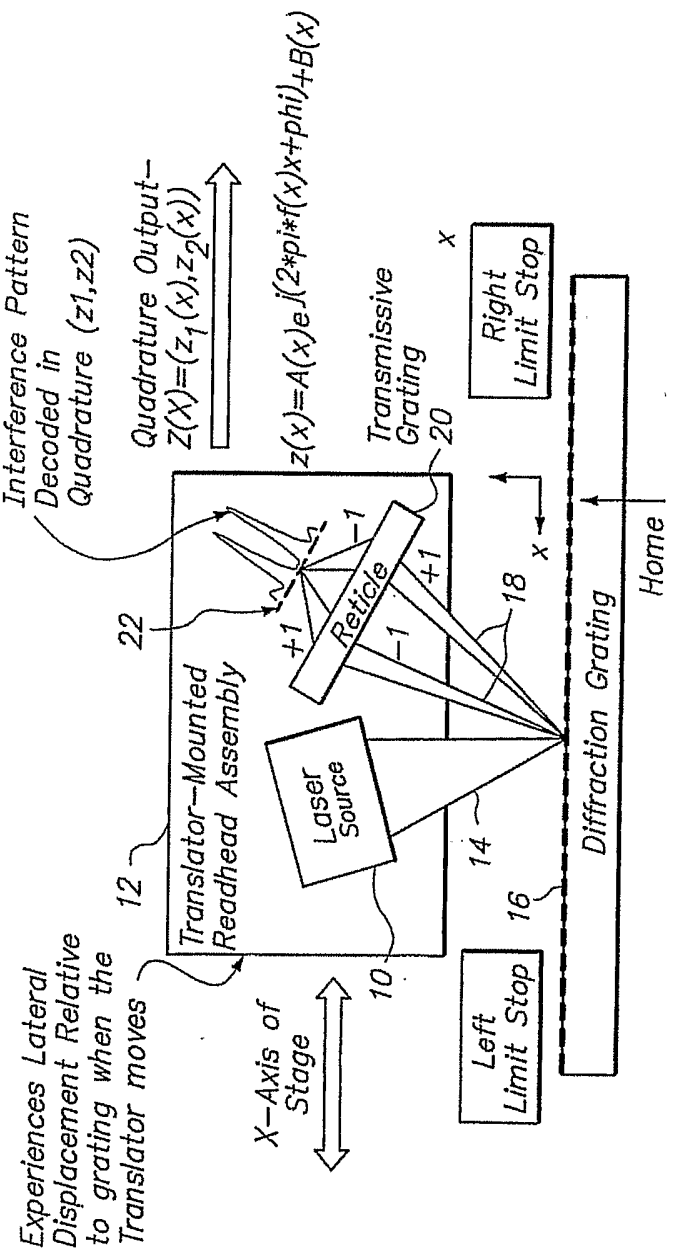
Experiences Lateral Displacement Relative to grating when the Translator moves
X-Axis of Stage
Translator-Mounted Readhead Assembly
12
10
Laser Source
14
16
Left Limit Stop
Diffraction Grating
Home
18
Reticle
+1
-1
22
Interference Pattern Decoded in Quadrature (z1,z2)
Quadrature Output- Z(X)=(z1(x),z2(x))
z(x)=A(x)e j(2*pi*f(x)x+phi)+B(x)
Transmissive Grating
20
Right Limit Stop
x

FIG. 1

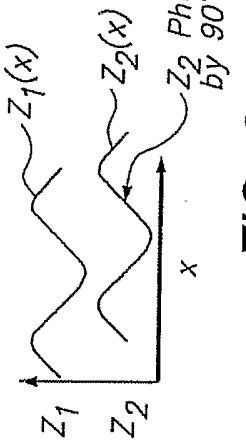
Z1(x)
Z2(x)
Z2 Phase-Shifted by 90° with respect to Z1
Z1
Z2
x

FIG. 2

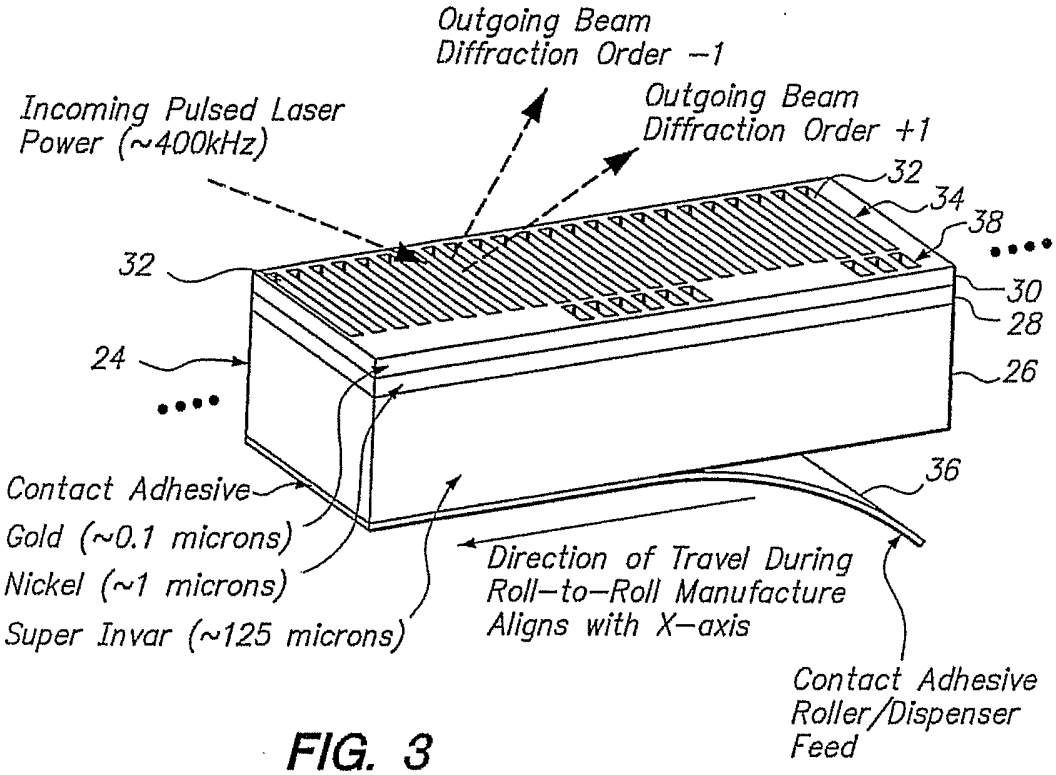
Outgoing Beam
Diffraction Order −1
Outgoing Beam
Diffraction Order +1
Incoming Pulsed Laser
Power (~400kHz)
32
34
38
32
30
28
24
26
36
Contact Adhesive
Gold (~0.1 microns)
Nickel (~1 microns)
Super Invar (~125 microns)
Direction of Travel During
Roll−to−Roll Manufacture
Aligns with X−axis
Contact Adhesive
Roller/Dispenser
Feed

FIG. 3

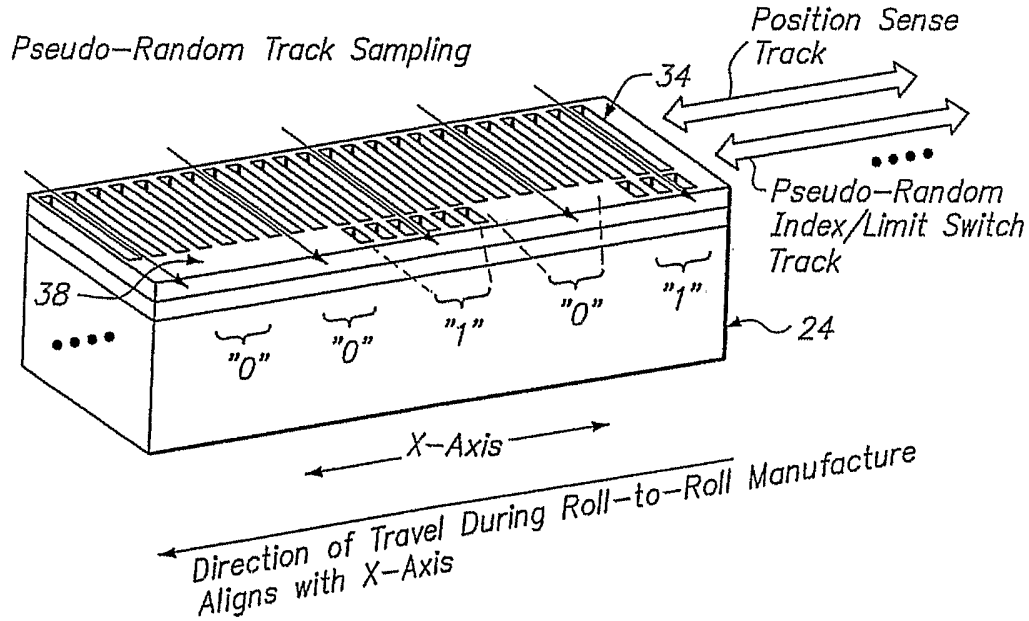
Pseudo−Random Track Sampling
Position Sense
Track
34
Pseudo−Random
Index/Limit Switch
Track
38
"0"
"0"
"1"
"0"
"1"
24
X−Axis
Direction of Travel During Roll−to−Roll Manufacture
Aligns with X−Axis

FIG. 4

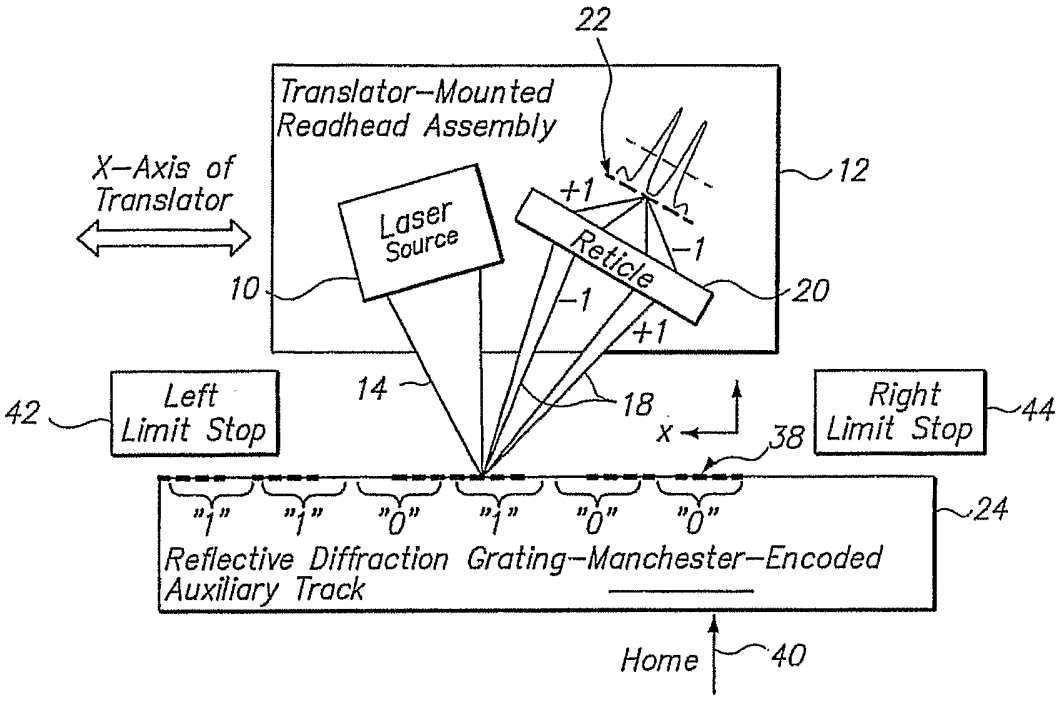
22
Translator–Mounted
Readhead Assembly
X–Axis of
Translator
Laser
Source
+1
Reticle
–1
12
10
–1
20
+1
42
Left
Limit Stop
14
18
x
38
Right
Limit Stop
44
"1" "1" "0" "1" "0" "0"
24
Reflective Diffraction Grating–Manchester–Encoded
Auxiliary Track
Home
40

FIG. 5

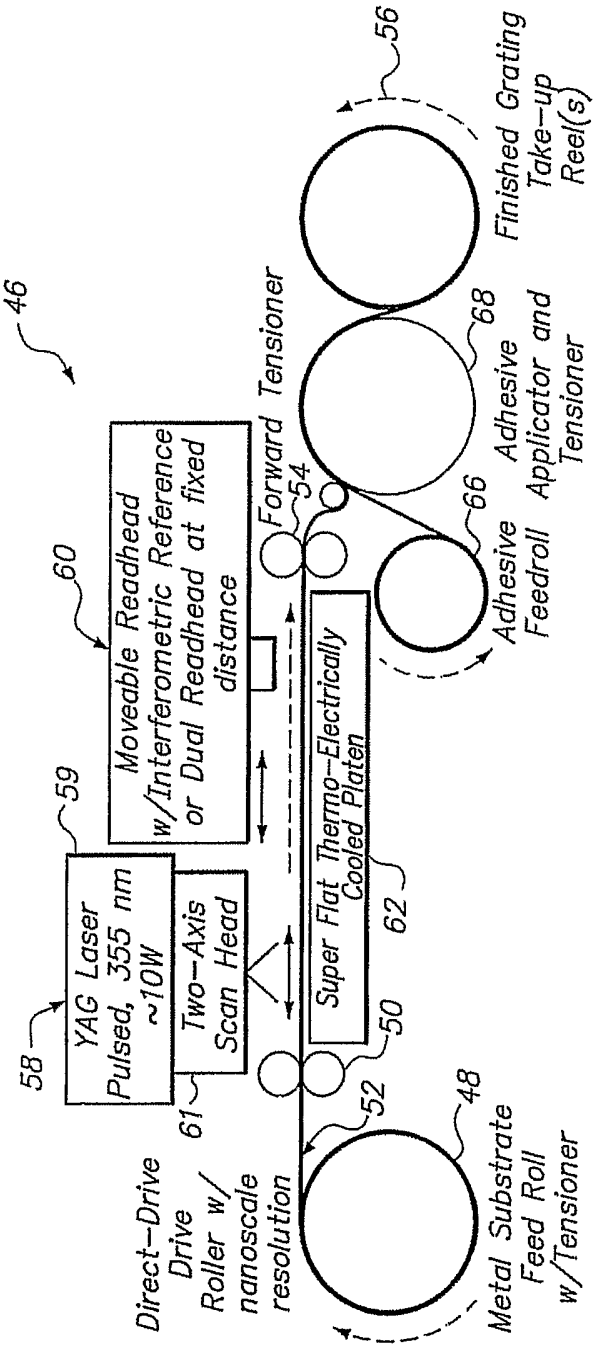
46
58
YAG Laser
Pulsed, 355 nm
~10W
59
Two-Axis
Scan Head
61
60
Moveable Readhead
w/Interferometric Reference
or Dual Readhead at fixed
distance
Forward Tensioner
54
Super Flat Thermo-Electrically
Cooled Platen
62
50
52
Direct-Drive
Drive
Roller w/
nanoscale
resolution
48
Metal Substrate
Feed Roll
w/Tensioner
66
Adhesive
Feedroll
68
Adhesive
Applicator and
Tensioner
56
Finished Grating
Take-up
Reel(s)

FIG. 6

5/6

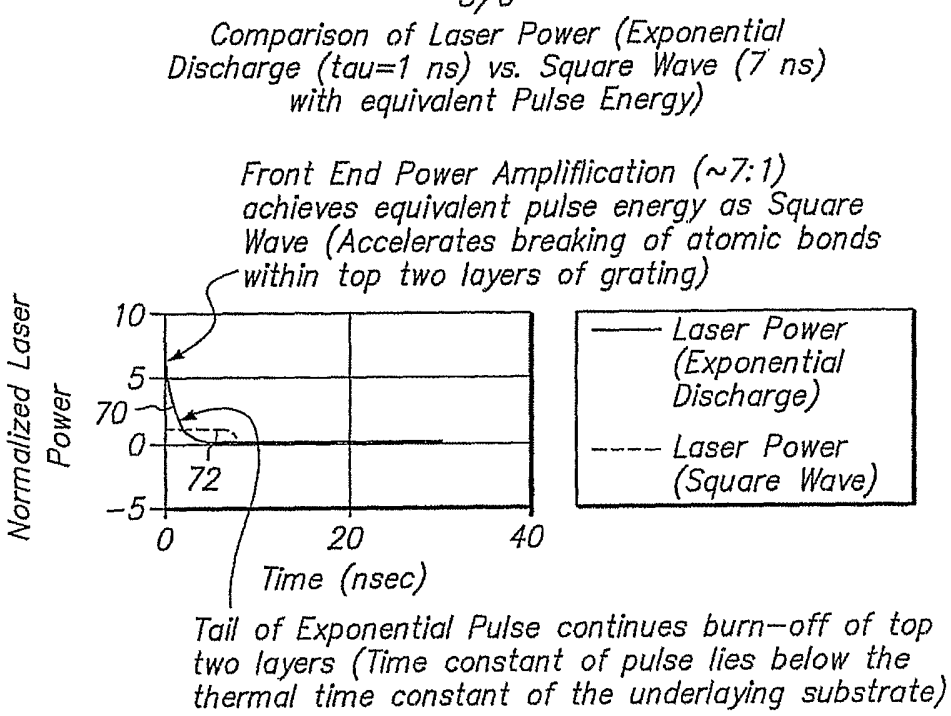
Comparison of Laser Power (Exponential Discharge (tau=1 ns) vs. Square Wave (7 ns) with equivalent Pulse Energy)
Front End Power Ampliflication (~7:1) achieves equivalent pulse energy as Square Wave (Accelerates breaking of atomic bonds within top two layers of grating)
Normalized Laser Power
10
5
70
0
72
-5
0
20
40
Time (nsec)
Laser Power (Exponential Discharge)
Laser Power (Square Wave)
Tail of Exponential Pulse continues burn-off of top two layers (Time constant of pulse lies below the thermal time constant of the underlaying substrate)

FIG. 7

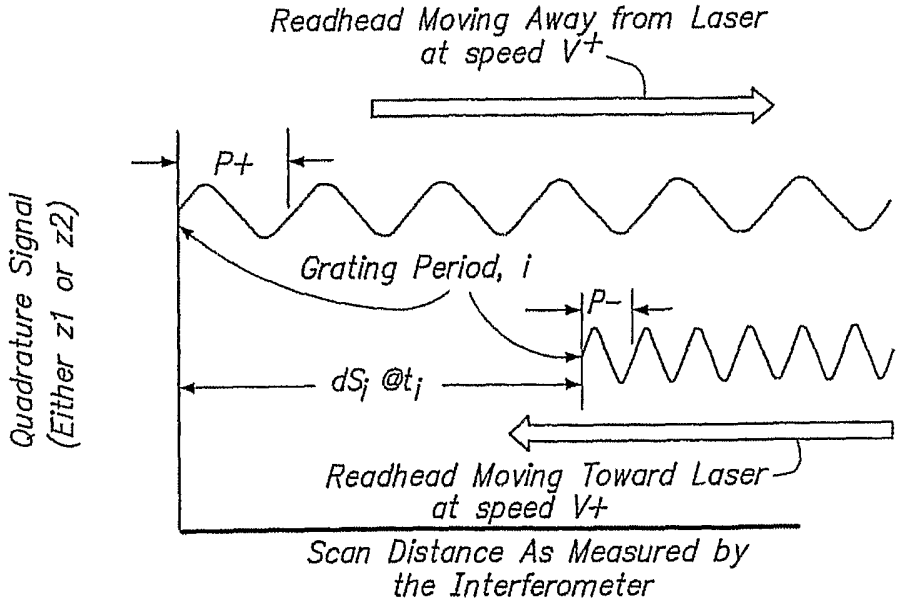
Readhead Moving Away from Laser at speed V+
P+
Grating Period, i
P-
dSi @ti
Readhead Moving Toward Laser at speed V+
Quadrature Signal (Either z1 or z2)
Scan Distance As Measured by the Interferometer

FIG. 8

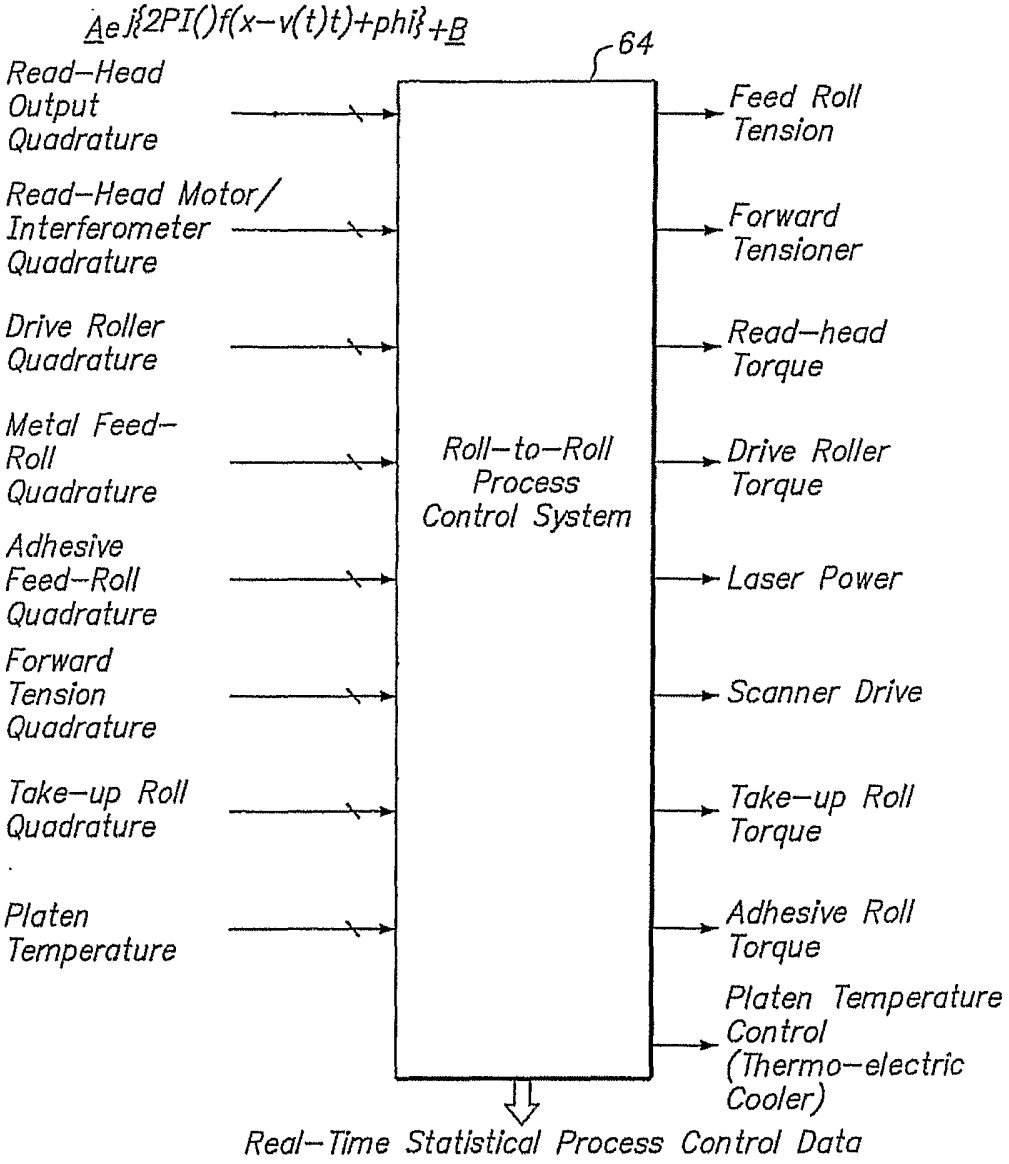
Ae j{2PI()f(x−v(t)t)+phi}+B
64
Read−Head Output Quadrature
Read−Head Motor/ Interferometer Quadrature
Drive Roller Quadrature
Metal Feed−Roll Quadrature
Adhesive Feed−Roll Quadrature
Forward Tension Quadrature
Take−up Roll Quadrature
Platen Temperature
Roll−to−Roll Process Control System
Feed Roll Tension
Forward Tensioner
Read−head Torque
Drive Roller Torque
Laser Power
Scanner Drive
Take−up Roll Torque
Adhesive Roll Torque
Platen Temperature Control (Thermo−electric Cooler)
Real−Time Statistical Process Control Data

FIG. 9