United States Patent [19]

Green

[11] **3,800,349**

[45] **Apr. 2, 1974**

[54] **CREDIT CARD CLEANING SYSTEM**

[76] Inventor: **Parrish O. Green,** 214 Burchfield St., Bakersfield, Calif. 93307

[22] Filed: **Apr. 28, 1972**

[21] Appl. No.: **248,599**

[52] **U.S. Cl.** **15/4,** 15/102

[51] **Int. Cl.** **B08b 1/02**

[58] **Field of Search** 15/4, 102, 77, 104.92, 15/100

[56] **References Cited**

UNITED STATES PATENTS

3,440,675	4/1969	Yeaman	15/4
3,694,071	9/1972	Touchette	15/77
3,428,988	2/1969	Blackburn	15/104.92
3,237,231	3/1966	Zink	15/102

FOREIGN PATENTS OR APPLICATIONS

509,785	10/1930	Germany	15/77

Primary Examiner—Leon G. Machlin

[57] **ABSTRACT**

The disclosed machine has a housing with a washing component and a drying compartment. The housing has a credit card receiving slot which opens into the washing compartment. The washing compartment is filled with a cleaning solution to just below the level of the receiving slot. A receiving platform is provided which is inclined downwardly below the surface of the cleaning solution where a pair of feed rollers pass the card through a pair of scrubbing rollers and onto a pair of squeegee rollers and a pair of drying rollers. The scrubbing rollers are below the level of the cleaning solution and so rotate as to wipe the card surfaces in a direction opposite its direction of travel. The squeegee rollers and drying rollers are in the drying compartment separated from the reservoir of cleaning solution and the drying rollers have heating elements which maintain them at a predetermined temperature.

14 Claims, 7 Drawing Figures

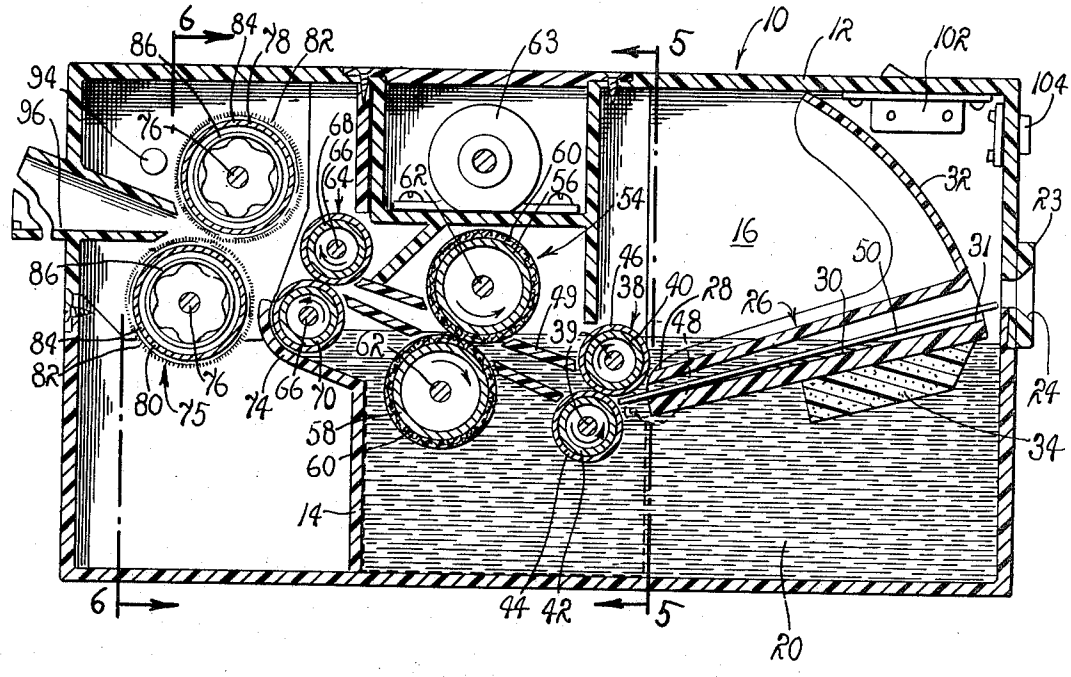

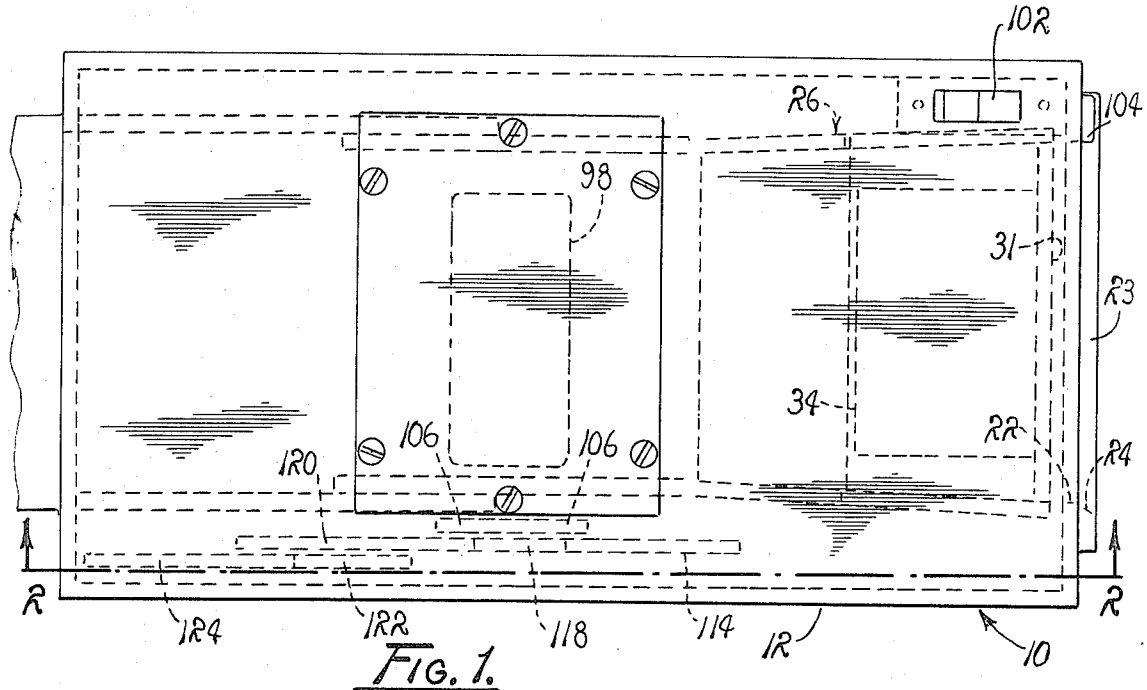
102
104
26
98
31
23
34
22
24
106
106
120
2
2
124
122
118
114
12
10

FIG. 1.

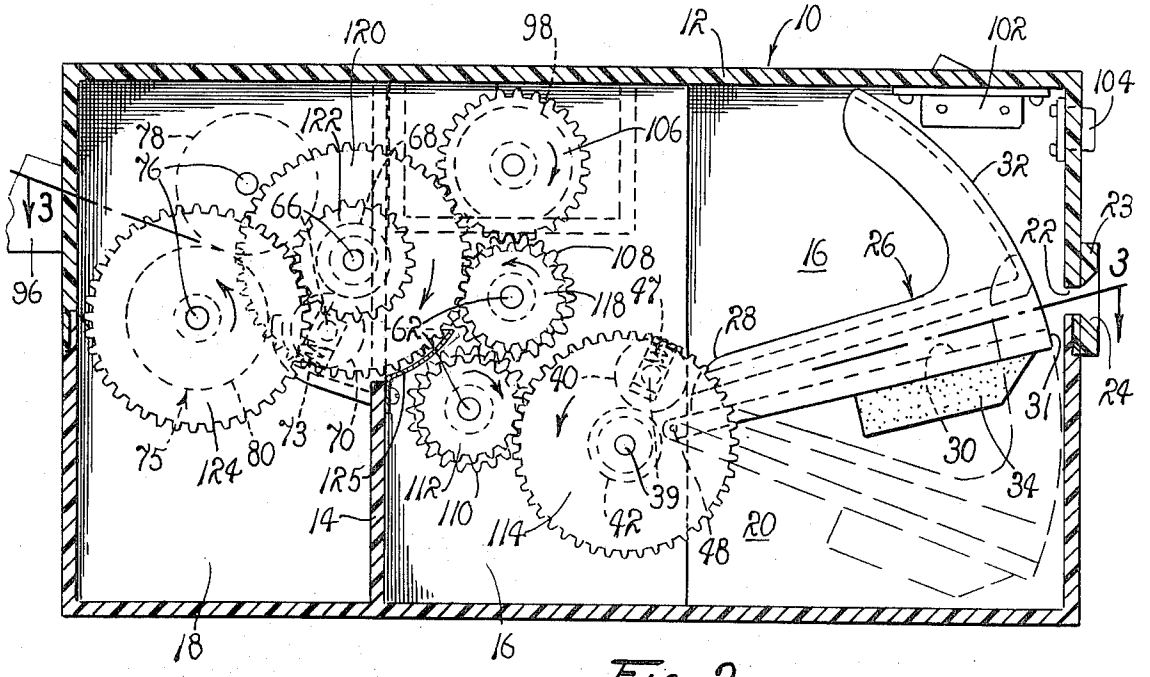
120
98
12
10
102
104
78
122
68
106
76
66
3
96
108
118
47
62
16
26
32
22
23
3
28
40
24
31
30
34
75
124
80
73
70
125
112
110
114
42
39
48
20
14
18
16

FIG. 2.

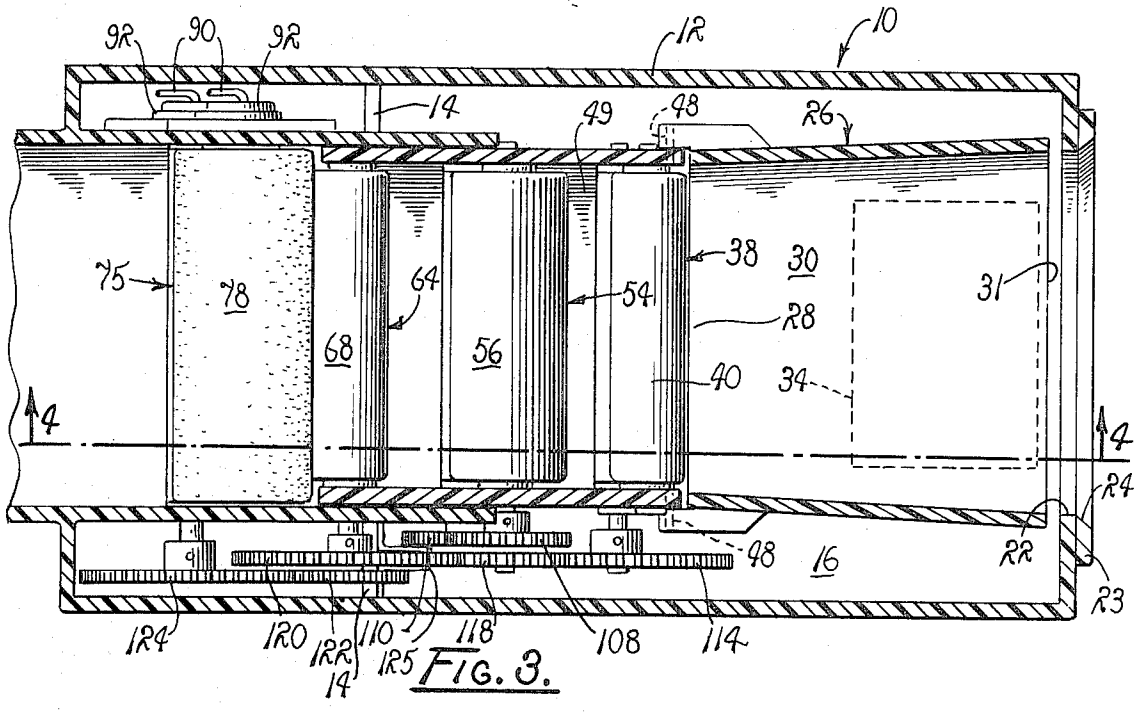
92
90
92
12
10
14
49
48
26
75
78
64
68
56
54
38
30
28
31
40
34
4
4
24
48
16
22
23
124
120
122
110
118
108
114
14
125

FIG. 3.

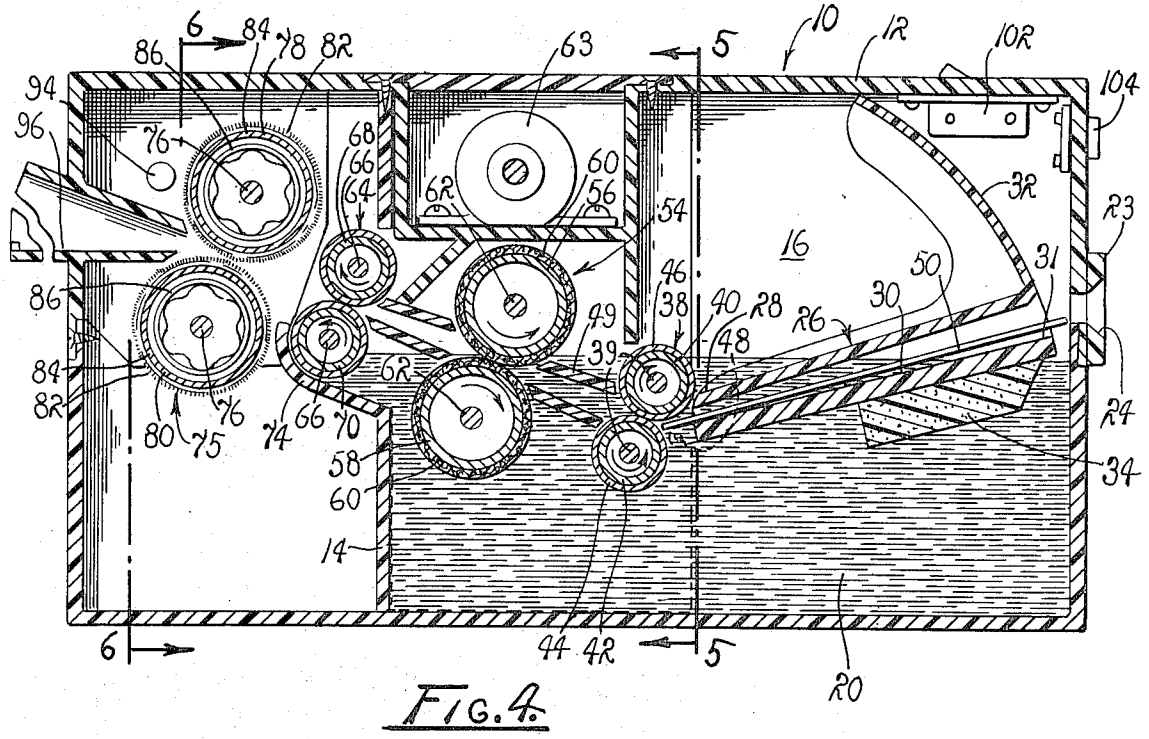
6
84
78
82
86
63
5
10
12
102
104
94
96
76
68
66
64
62
60
56
54
32
23
16
86
46
38
40
28
26
30
50
31
49
39
48
84
82
80
75
76
74
66
70
62
58
60
14
24
34
6
44
42
5
20

FIG. 4.

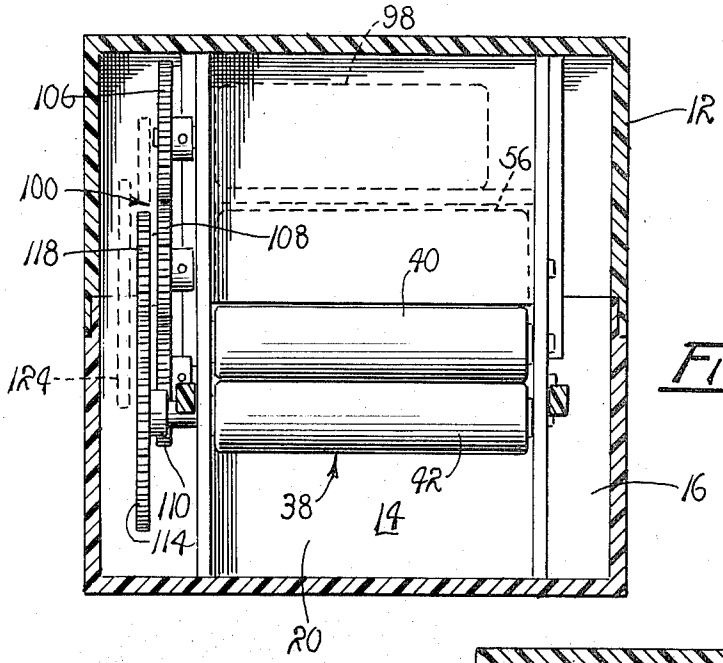

FIG. 5.

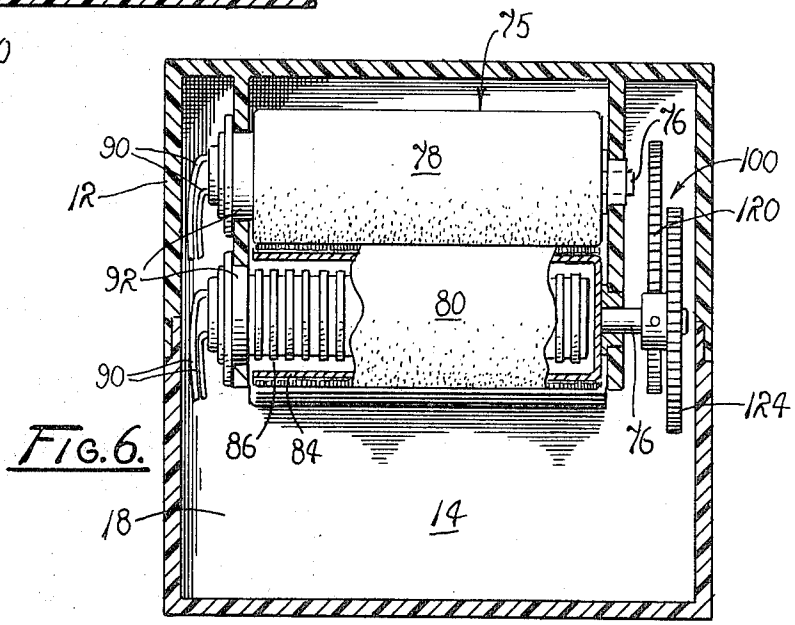

FIG. 6.

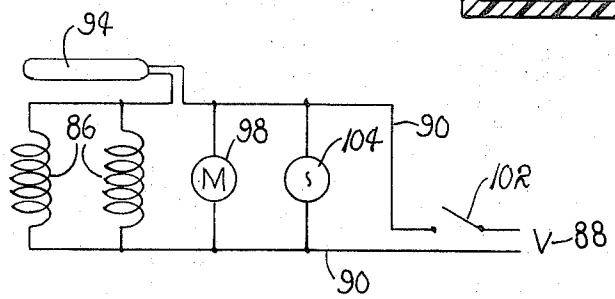

FIG. 7.

CREDIT CARD CLEANING SYSTEM

BACKGROUND OF THE INVENTION

This invention relates generally to cleaning machines and more particularly to machines for cleaning relatively rigid cards of plastic material.

The use of credit cards has now become of such importance that few purchasers are without one or more of them. Frequently the credit cards are carried in pockets, purses, or wallets where they accumulate dirt. Not only does this give an unpleasing appearance to the card, but it also interfers to some extent with the card's effective functioning in imprinting of the name and card number on the printed charge forms.

Although credit cards can be cleaned by hand, this is inconvenient and, therefore, infrequently done. A need, therefore, exists for a simple but effective credit card cleaning machine.

SUMMARY OF THE INVENTION

It is, therefore, a major object of my invention to provide a credit card cleaning machine which rapidly washes and drys a credit card.

It is also an important object of my invention to provide a credit card cleaning machine which will clean a card automatically by merely inserting the card in a receiving slot and pressing a button.

It is another object of my invention to provide a credit card cleaning machine of the type described in which both surfaces of the card are simultaneously scrubbed while it is submerged in cleaning solution and then wipes off the cleaning solution and drys the card.

It is yet another object of my invention to provide a credit card cleaning machine of the type described in which the credit card is carried down into a reservoir of cleaning solution for washing and up out of the reservoir for drying and the drying rollers which are internally heated to a predetermined temperature by thermostatic control.

It is still a further object of my invention to provide a credit card cleaning machine of the type described that is compact, convenient to use, and easy to maintain.

DRAWINGS

These and other objects and advantages of my invention will become more readily apparent from the following detailed description of a preferred embodiment when read together with the accompanying drawings, in which:

FIG. 1 is a plan view of a preferred embodiment of my invention;

FIG. 2 is a sectional side elevational view of the preferred embodiment of my invention taken on line 2—2 in FIG. 1;

FIG. 3 is a sectional plan view taken on line 3—3 in FIG. 2;

FIG. 4 is a sectional side elevational view taken on line 4—4 in FIG. 3;

FIG. 5 is a sectional end elevational view taken on line 5—5 in FIG. 4;

FIG. 6 is a sectional end elevational view taken on line 6—6 in FIG. 4; and

FIG. 7 is a schematic view of the electrical circuitry for heating my drying rollers.

DETAIL DESCRIPTION OF PARTS

Referring now to the drawings, and particularly to FIGS. 3 and 4, the numeral 10 refers generally to my credit card cleaning machine. The machine consists of a housing 12 which is internally divided by a partition 14 into a washing compartment 16 and a drying compartment 18. The partition 14 extends upwardly for a portion of the height of the housing a sufficient distance to form a reservoir 20 of cleaning solution in the washing compartment 16 and screen the drying compartment from solution splash.

A card receiving slot 22 is provided in the receiving end of the housing adjacent the washing compartment 16. The receiving slot 22 is wide enough to receive the width of a credit card and is located in the end wall of the housing 12 just above the level of the cleaning solution in the reservoir 20. A facing plate 23 is provided on the housing wall outside the receiving slot with a tapered throat 24 to assist in insertion of the card into the slot.

A receiving platform 26 is mounted just inside the receiving slot 22 in the washing compartment 16. The receiving platform 26 is pivotally mounted in the housing at its inner end 28 and has a shute 30 for supporting a card delivered through the receiving slot, and a flange 32 for blocking the receiving slot 22. The flange 32 is mounted on the outer end of the receiving platform 26 and swings downward to block the receiving slot 22 when the platform pivots downwardly about its mounting. The receiving platform 26 is disposed with its shute 30 inclined downwardly so that its inner end 28 is below the surface of the cleaning solution in the reservoir 20 of washing compartment 16, and a float 34, preferably of plastic foam, is attached to the bottom of the shute 30 near its outer end 31 which floats on cleaning solution in the washing compartment reservoir 20 to urge the outer end of the receiving platform into its upper position (see FIG. 4). The shute 30 is tapered in height and width to further align the card as it travels through the shute.

Adjacent the inner end 28 of the receiving platform 26, I provide a pair of co-acting feed rollers 38 located one above the other on shafts 39 which are journaled in the wall of the housing 12 and disposed substantially normal to the path of travel of the card through the housing. For each of description, this path of travel of the card will be referred to as starting at the forward end of the housing 12 (where the card receiving slot 22 is located) and proceeding rearwardly to the rear end of the housing (opposite the end having the card receiving slot). Thus, those things which are positioned closer to the forward end of the housing will be referred to as forward, or in front of; those items which are closer the rear, as rearward.

The pair of feed rollers 38 consist of an upper roller 40 and a lower roller 42. The lower roller 42 has a cylindrical firm rubber periphery 44 which extends the full length of the roller and is driven by a drive motor through appropriate gearing, more fully described later. The upper roller 40 also has a periphery 46 formed of hard rubber, and its shaft 39 is bearing mounted in the housing but is free turning. The bearings for the upper shaft are movable and spring loaded toward the lower roller shaft by bearing springs 47. Thus mounted, the shafts 39 of the rollers are sufficiently close that the periphery 46 on the upper roller

is frictionally engaged by the periphery **44** of the lower roller and so that the upper roller is caused to rotate when the lower roller rotates.

Since the shaft **39** of the upper roller **40** is positioned slightly forward of the lower roller shaft, a plane tangential to the contact between the rollers is inclined upwardly and rearwardly (see FIG. **4**). Also, the direction of rotation of the lower roller **42** is counterclockwise (as seen in FIG. **4**) so that its periphery **44** travels rearwardly at the top of the roller. The frictional engagement between periphery **44** of the lower roller and the periphery **46** on the upper roller drives the periphery rearwardly at its bottom, thus rotating the upper roller clockwise as seen in FIG. **4.** Rotation of the feed rollers **38** in this manner carries a card rearwardly on its path of travel when it is fed between the rollers.

To further guide the card along its path, a feed roller guide **49** is disposed reaward of the feed rollers.

The pivot point **48** for the inner end **28** of the receiving platform **26** is adjacent the periphery **44** of the lower roller **42** and just below the point of engagement between the feed rollers so that the leading edge of a card **50** inserted through the card receiving slot **22** and resting in the shute **30** engages the upper portion of the lower roller periphery **44** and is drawn in between rollers. At this point the trailing edge of the card clears the card receiving slot **22** and is driven downwardly because the feed rollers **38** are so aligned as to direct the card along the path of travel which is inclined upwardly and rearwardly from the feed rollers, as previously explained. Although the card is supported by the shute **30** of the receiving platform **26,** force applied to the card by the feed rollers **38** pivots both the card and the receiving platform downwardly to totally submerge the card in the cleaning solution. This downward pivotal movement of the receiving platform **26** draws the blocking flange **32** in front of the receiving slot **20** to prevent another card from being inserted in the slot while the first card is proceeding through the feed rollers.

When the trailing edge of the card **50** reaches the feed rollers **38,** the card is clear of the shute **30** of the receiving platform **26** and the float **34** driven the receiving platform upward again moving the blocking flange **32** above the card receiving slot **22** and opening the slot for insertion of another card.

A pair of scrubbing rollers **54** are provided just rearward the feed rollers **38.** The scrubbing rollers **54** consist of an upper scrubbing roller **56** and a lower scrubbing roller **58,** both of which are identical and have coacting peripheral surfaces which are juxtaposed along a tangential line of contact in the inclined plane of the path of travel of the card. Each of the rollers has a peripheral surface **60,** pourous and somewhat roughened, such as a terry cloth or a shaggy snythetic fiber, which retains cleaning solution picked up from the reservoir **20** in the washing compartment **16** and scrubs surfaces placed in contact with it. The scrubbing rollers **54** are mounted on shafts **62** which are, in turn, journaled in the housing **12** and substantially normal to said inclined path of travel. The shafts are also sufficiently close together to bring their surfaces **60** into contact, and the shaft **62** of the upper scrubbing roller **56** is positioned slightly forward of the lower scrubbing roller shaft to align their area of contact with the path of travel as aforesaid. Also, the shafts **62** are so positioned that the area of contact between the scrubbing rollers is at or just below the surface of cleaning solution in the reservoir **20** so the roller surfaces **60** are continuously saturated with the solution.

The shafts **62** of both the upper and lower scrubbing rollers are driven by a drive motor **63** through appropriate gearing, as will be later explained. The upper scrubbing roller **56** turns counter-clockwise, as viewed in FIG. **4,** and the lower scrubbing roller turns clockwise, as viewed in FIG. **4,** so that the co-acting surfaces of the two rollers are moving in a direction opposite the direction of travel of the card at the point where the card passes between them. The shafts **62** of each of the scrubbing rollers each rotates at the same speed, however, this speed is substantially greater than the speed of rotation of the feed rollers **38.**

The surfaces **60** of the scrubbing rollers thus wipe across both surfaces of the card **50** for many revolutions as it passes between the rollers, thoroughly scrubbing them.

Rearward of the scrubbing rollers **54,** a pair of squeegee rollers **64** are provided, and a scrubbing roller guide **65** is disposed between the pairs of rollers. The squeegee rollers **64** are mounted one above the other on shafts **66** journaled journaled in the housing **12,** like the feed rollers **38.** The squeegee rollers also consist of an upper squeegee roller **68,** the shaft of which is mounted above and slightly forward of the shaft of the lower squeegee roller **70.** Again, the shafts **66** of the squeegee rollers **64** are substantially normal to the inclined plane containing the path of travel of the card and the rollers' coacting surfaces between which the card **50** passes. The coacting surfaces travel in the same direction as the card **50** and at approximately the same speed as the feed rollers **38** and are sufficently close to grip and pass the card therebetween. The peripheries of the squeegee rollers **64** are cylinders formed of a firm rubber material which squeezes the cleaning solution from both sides of the card as the card passes through the rollers.

The squeeqee rollers **64** are so positioned with respect to the feed rollers **38** that the leading edge **48** of the card **50** is engaged by the coacting surfaces of the squeegee rollers, before the trailing edge **52** of the card has left the feed rollers. Since the scrubbing rollers **54** are positioned between the feed rollers **38** and the squeegee rollers **64** along the path of the travel of the card, the card **50** is held and moved along its path of travel by either the feed rollers **38** or the squeegee rollers **64,** or both, at all times when its surfaces are exposed to the scrubbing action of the scrubbing rollers **54.**

The upper squeegee roller **68** is driven by a drive motor through appropriate gears, as will be later explained, and the lower squeegee roller **70** is driven by frictional engagement of its peripheral surface with the upper squeegee roller. The frictional engagement is maintained by bearing springs **73** which urge the lower squeegee roller shaft toward the upper squeegee roller shaft in the same manner as in the feed rollers **38.**

The squeegee rollers are located in the drying compartment **18** just rearward the partition **14** along the path of travel of the card **50.** Since the plane of the path of travel is inclined upwardly and rearwardly the coacting surfaces of the squeegee rollers are above the level of cleaning solution in the reservoir **20,** and a drain pan **74** is provided on the partition **14** which extends rearwardly into the drying compartment **18** under the

squeegee rollers. The drain pan **74** is inclined forwardly downward toward the reservoir **20** of cleaning solution in the washing compartment **16** and any moisture squeezed out of the squeegee rollers is thereby captured and delivered back into the cleaning solution reservoir in the washing compartment.

Just rearward of the squeegee rollers **64** along the path of travel of the card **50** are a pair of drying rollers **74.** The drying rollers **74** are mounted on shafts **76** journaled in the walls of housing **12** and substantially normal to the path of travel, similar to the squeegee rollers. The drying rollers **74** consist of an upper drying roller **78** and a lower drying roller **80** mounted with the shaft of the upper drying roller forward of the lower drying roller shaft and sufficiently close to provide an area of contact aligned with the inclined path of travel of the card **50.** The drying rollers **74** are larger than the squeegee rollers **64** and have soft, absorbant peripheral surfaces **82.** The drying rollers **74** also have hollow bores **84** in which are disposed electric heating elements **86.** The heating elements **86** are supported on the housing and connected to an electric power source **88** by means of connectors **90** and electric bases **92.** Thermostatic controls **94** are provided in the electric circuitry to maintain the drying rollers at a predetermined temperature. The coacting surfaces of the drying rollers **74** move in the same direction as the travel of the card **50** and, therefore, engage and move the card along its path of travel as the card is moved out of the squeegee rollers **64.**

The lower drying roller shaft is driven through gearing by the drive motor **63,** and the upper drying roller shaft is freely rotatable but positioned sufficiently close to the lower drying roller to grip the card between the rollers.

Aligned with the path of travel of the card **50** and rearward of the drying rollers **74** in the rear wall of the housing **12,** a card discharge shute **96** is provided. The card discharge shute **96** extends inside the housing to a point sufficiently close to the rear of the drying rollers that as the card **50** is passed through the drying rollers **74** a major portion of the card **50** adjacent its leading edge passes onto the card discharge shute before the trailing edge of the card has left the drying rollers. Therefore, when the trailing edge of the card is released by the drying rollers, the card will pass onto the card discharge shute where it will remain until manually removed.

To drive the various pairs of rollers in my machine in the required directions, I provide in addition to the electric drive motor **63,** drive gearing **100.** The drive motor **63** is powered from the 110 volt electric power source **88** through a circuit breaker **102.** The drive gearing **100** consists of a drive pinion **106** mounted on the shaft of the motor **63** on the left side of the machine **10** looking in the direction of travel of the card **50** (see FIG. **2**). The drive pinion **106** rotates clockwise as seen in FIG. **2.** The drive pinion **106** is engaged with the upper scrubbing roller pinion **108** which is mounted on the upper scrubber roller shaft **62.** The upper scrubbing roller pinion **108** is, in turn, engaged with a lower scrubbing roller pinion **110** mounted on the lower scrubbing roller shaft **62.** Since the drive pinion **106** rotates clockwise, the upper scrubbing roller pinion **108** rotates counter-clockwise, and the lower scrubbing roller pinion **110** rotates clockwise again, the desired direction of rotation is thus applied to the shafts upon which they are mounted. A feed roller transfer gear **112** is mounted on the lower scrubbing roller shaft **62** adjacent the lower scrubbing roller pinion **110** and is engaged with a lower feed roller pinion **114** mounted on the lower feed roller shaft **39.** The engagement between the feed roller transfer gear **112** and the lower feed roller pinion **114** is such that the clockwise rotation of the lower scrubbing roller shaft **62** causes counter-clockwise rotation of the lower feed roller shaft **39.** No drive gear is provided on the upper drive roller since this roller is driven by frictional surface contact with the lower feed roller as previously explained.

A squeegee transfer gear **118** is also provided on the end of the upper scrubbing roller shaft **62** which drives the upper squeegee roller gear **120** on the upper squeegee roller shaft **66** in a clockwise direction. Since the upper squeegee roller **68** has its surface in frictional engagement with the surface of the lower squeegee roller **70,** the lower squeegee roller is caused to turn counter-clockwise. The upper squeegee roller shaft **66** also has a dryer drive transfer gear **122** on its end which engages and drives the lower drying roller shaft **76** through a lower drying roller pinion **124** in a counter-clockwise direction. The surface of lower drying roller **80** is engaged with the surface of the upper roller gear **78** and it is thus driven in a clockwise direction (all as seen in FIG. **2**). Thus, all of the driven rollers in my machine are powered from a single drive motor through the gearing described.

The speed differential between the scrubbing rollers on the other rollers, previously described, is provided by selecting gears of the proper size, as shown in FIG. **2.**

OPERATION

Having described the parts of my card cleaning machine, I will now describe its operation. The machine is operated by inserting a credit card into the throat **24** of card receiving slot **22** longwise. The card is manually inserted to the point where its leading or inner edge contacts the feed rollers **38** at the inner end **28** of the receiving platform **26.**

At this point the actuating button **104** is operated to start the rollers and the lead edge of the card is gripped by the feed rollers and drawn inwardly. Because of the vertically offset alignment of the feed rollers, the card will be swung pivotally downward to align itself with the upwardly, rearwardly inclined path of travel defined by the co-acting surfaces of the feed rollers. Since the feed rollers are so arranged that the path of travel will be aligned upwardly into the discharge slot, the card is drawn down into the cleaning solution in the washing compartment.

Since the card **50** is resting in the shute **30** of the receiving platform, the receiving platform is also pivoted downward into the cleaning solution, about its inner end **28.** The flange **32** on the outer end of the receiving platform is thus brought down to block the card receiving slot **22** and prevent further credit cards from being inserted into the slot until the card inside the housing has passed through the feed rollers. As the feed rollers **38** continue to travel the card **50** along the upwardly inclined path toward the card discharge shute **96,** the leading edge of the card reaches the co-acting surfaces of the scrubbing rollers **54.** At this point the body of the card is still firmly engaged by and being moved between the feed rollers **38.** The co-acting surfaces **60** of

the scrubbing rollers **54** are traveling in a direction opposite to the direction of travel of the card **50** and are rotating at a greater speed than the feed rollers **38.** Therefore, a substantial scrubbing action occurs between the peripheral surfaces of the scrubbing rollers and the upper and lower surfaces of the card.

As the leading edge of the card passes on through the scrubbing rollers it passes through the partition **14** and into the drying compartment **18** where it is engaged by the coacting surfaces **72** of the squeegee rollers **64.** The leading edge of the card is engaged by the co-acting surfaces of the squeegee rollers before the trailing edge of the card has left the feed rollers, so the reverse scrubbing action of the scrubbing rollers does not effect the travel of the card.

The surfaces **72** of the squeegee rollers wipe moisture from the surfaces of the card and continue tomove the card along its path of travel until the leading edge passes between the co-acting surfaces of the drying rollers **74.** The drying rollers dry the surfaces of the card while the squeegee rollers continue to travel the card toward the card discharge shute **96.** When the leading edge of the card is substantially over the discharge shute, the trailing edge **52** of the card completes its passage through the squeegee rollers. At this point the drying rollers **74** have enough friction and drive power to move the card on through for deposit on the card discharge shute into a position where it will rest until manually removed.

The operating button is spring biased to its open position so the machine **10** only operates while the operator holds down the button **104.** Any time the operator's finger is removed from the button, the machine stops, leaving the card in its particular position on the path of travel. Therefore, the machine is operated by inserting the card and maintaining a finger on the drive button until the card comes out of the discharge slot and can be retrieved.

The surfaces **72** of the squeegee rollers wipe moisture from the surfaces of the card and continue to move the card along its path of travel until the leading edge passes between the co-acting surfaces of the drying rollers **74.** The drying rollers dry the surfaces of the card while the squeegee rollers continue to travel the card toward the card discharge shute **96.** When the leading edge of the card is substantially over the discharge shute, the trailing edge **52** of the card completes its passage through the squeegee rollers. At this point the drying rollers **74** have enough friction and drive power to move the card on through for deposit on the card discharge shute into a position where it will rest until manually removed.

To give visual notice that the machine is in operation a signal light **104** is provided at the forward end of the housing **12.** Signal light **104** is connected into the electric circuit as shown in FIG. **7** so that it is lighten whenever the operating switch **102** is in the "on" position.

From this description of the parts and operation of my machine it will be understood that rapid but thorough cleaning of the card will occur. The speed and contradirection of the scrubbing rollers together with the submersion of the card at this point in the path of travel assures adequate scrubbing of both surfaces of the card, while the squeeze rollers and heated drying rollers provide the necessary drying.

The machine is compact, simple to operate, and comparatively inexpensive to construct, particularly because of the single drive motor and gearing which power all rollers.

It should, therefore, be understood that my card cleaning machine is fully capable of achieving the objects and attaining the advantages heretofore attributed to it.

I claim:

1. A credit card cleaning device comprising:

a frame;

means defining a path of travel for a credit card, said means being disposed in said frame and having a card receiving end and a card discharge end;

a scrubbing chamber mounted in said frame and having a reservoir operatively associated with said path of travel defining means disposed to contain a cleaning solution to a level sufficient to cover a portion of said path of travel defining means adjacent the card receiving end thereof;

a drying chamber mounted in said frame and separated from said scrubbing chamber, said drying chamber being operatively associated with said path of travel defining means and disposed adjacent the card discharge end thereof;

propelling means operatively associated with said path of travel defining means and disposed to engage and propel a credit card therealong;

card delivery means operatively associated with said frame and disposed adjacent the card receiving end of said path of travel defining means, said card delivery means being operable to receive a credit card outside said cleaning solution contained in said scrubbing chamber reservoir and deliver said card into said reservoir cleaning solution and the receiving end of said path of travel defining means; and drive means drivingly interconnected with said propelling means, scrubber and dryer.

2. A credit card cleaning device as described in claim **1** in which:

said scrubbing chamber includes scrubbing means operatively associated with said path of travel defining means, said scrubbing means being disposed to engage and scrub surfaces of a credit card propelled along said path of travel.

3. A credit card cleaning device as described in claim **1** in which:

said drying chamber includes drying means operatively associated with said path of travel defining means, said drying means being disposed to engage and dry surfaces of a credit card propelled along said path of travel.

4. A credit card cleaning device as described in claim **2** in which:

said drying chamber includes a pair of rollers having their shafts disposed parallel and their peripheries tangentially juxtaposed on said path of travel, each of said rollers having a moisture absorbent outer surface and an internal heating element.

5. A credit card cleaning device as described in claim **3** in which:

said scrubbing means includes a pair of scrubbing rollers having their shafts disposed parallel and their peripheries tangentially juxtaposed on said path of travel, each of said rollers having a moisture retaining outer surface, said rollers being in liquid communication with said reservoir of cleaning fluid and disposed to engage surfaces of a credit card propelled along said path of travel and scrubb said sur-

faces in a direction opposite the direction of travel of said card.

6. A credit card cleaning device as described in claim 1 in which:

said scrubbing chamber includes a pair of scrubbing rollers having their shafts disposed parallel and their peripheries tangentially juxtaposed on said path of travel, each of said rollers having a moisture retaining outer surface, said rollers being in liquid communication with said reservoir of cleaning fluid and disposed to engage surfaces of a credit card propelled along said path of travel and scrub said surfaces in a direction opposite the direction of travel of said card;

said drying chamber includes a pair of rollers having their shafts disposed parallel and their peripheries tangentially juxtaposed on said path of travel, each of said rollers having a moisture absorbent outer surface and an internal heating element;

said propelling means includes a pair of feed rollers disposed ahead of said scrubbing rollers along said path of travel, said feed rollers having parallel shafts and tangentially juxtaposed peripheries disposed to engage a credit card therebetween and propel it along said path of travel and between said scrubbing rollers, and further includes a pair of squeegee rollers disposed after said scrubbing rollers and before said drying rollers along said path of travel, said squeegee rollers having parallel shafts and tangentially juxtaposed peripheries disposed to engage a credit card therebetween and propel it along said path of travel, and said squeegee rollers being separated from liquid communication with said reservoir of cleaning solution and having surfaces which squeegee said cleaning solution from the surfaces of said credit card; and

said drive means are drivingly interconnected with said scrubbing rollers, drying rollers, feed rollers and squeegee rollers and includes a motor and drive gears.

7. A credit card cleaning device as described in claim 1 in which:

said path of travel is linear and inclined upwardly in a rearward direction.

8. A credit card cleaning device as described in claim 7 in which:

said card delivery means incudes a chute pivotally mounted at its inner end adjacent the card receiving end of said path of travel defining means and in said cleaning solution of said reservoir, and extending upwardly and forwardly therefrom with its outermost end disposed above the level of said cleaning solution in said reservoir.

9. A credit card cleaning device as described in claim 7 in which:

said card delivery means includes a chute pivotally mounted at its inner end adjacent the card receiving end of said path of travel defining means and in said cleaning solution of said reservoir, and extending upwardly and forwardly therefrom with its outermost end disposed above the level of said cleaning solution in said reservoir, said chute having a float disposed in said cleaning solution and bouyed up thereby to normally maintain said chute in its upper position, and being pivotal downward against the bouyancy into alignment with said path of travel when a credit card disposed in said chute is urged into alignment with said path of travel by engagement of its leading edge with said propelling means.

10. A credit card cleaning device as described in claim 7 in which:

said scrubbing chamber includes scrubbing means operatively associated with said path of travel defining means, said scrubbing means being disposed to engage and scrub surfaces of a credit card propelled along said path of travel.

11. A credit card cleaning device as described in claim 7, in which:

said drying chamber includes drying means operatively associated with said path of travel defining means, said drying means being disposed to engage and dry surfaces of a credit card propelled along said path of travel.

12. A credit card cleaning device as described in claim 7 in which:

said card delivery means includes a chute pivotally mounted at its inner end adjacent the card receiving end of said path of travel defining means and in said cleaning solution of said reservoir, and extending upwardly and forwardly therefrom with its outermost end disposed above the level of said cleaning solution in said reservoir;

said scrubbing chamber includes a pair of scrubbing rollers having their shafts disposed parallel and their peripheries tangentially juxtaposed on said path of travel, each of said rollers having a moisture retaining outer surface, said rollers being in liquid communication with said reservoir of cleaning fluid and disposed to engage surfaces of a credit card propelled along said path of travel and scrub said surfaces in a direction opposite the direction of travel of said card;

said drying chamber includes a pair of rollers having their shafts disposed parallel and their peripheries tangentially juxtaposed on said path of travel, each of said rollers having a moisture absorbent outer surface and an internal heating element;

said propelling means includes a pair of feed rollers disposed ahead of said scrubbing rollers along said path of travel, said feed rollers having parallel shafts and tangentially juxtaposed peripheries disposed to engage a credit card therebetween and propel it along said path of travel and between said scrubbing rollers, and further includes a pair of squeegee rollers disposed after said scrubbing rollers and before said drying rollers along said path of travel, said squeegee rollers having parallel shafts and tangentially juxtaposed peripheries disposed to engage a credit card therebetween and propel it along said path of travel, and said squeegee rollers being separated from liquid communication with said reservoir of cleaning solution and having surfaces which squeegee said cleaning solution from the surfaces of said credit card; and

said drive means are drivingly interconnected with said scrubbing rollers, drying rollers, feed rollers and squeegee rollers and includes a motor and drive gears.

13. A credit card cleaning device comprising:

an elongated housing having a forward end and a rearward end;

a substantially vertical partition mounted in said housing and disposed to divide said housing into a

scrubbing compartment adjacent said forward end and a drying compartment adjacent said rearward end;

a card receiving slot in the forward end of said housing opening through said housing wall and into said scrubbing chamber;

a reservoir in said scrubbing compartment containing cleaning liquid to a level below that of said card receiving slot;

a pair of feed rollers mounted in said scrubbing compartment on parallel shafts disposed normal to said card receiving slot, said rollers having their peripheries tangentially juxtaposed in a plane inclined upwardly in a rearwardly direction and positioned below the level of the cleaning liquid in said reservoir;

a pair of scrubbing rollers mounted in said scrubbing compartrearward of said feed rollers a distance less than the length of said card on parallel shafts disposed parallel to said feed roller shafts, said rollers having their peripheries tangentially juxtaposed in said inclined plane with said line of juxtaposition below the level of the cleaning liquid in said reservoir;

a pair of squeegee rollers mounted in said drying compartment adjacent said scrubbing compartment and rearward of said scrubbing rollers a distance less than the length of said credit card on parallel shafts disposed parallel to said feed roller shafts, said rollers having their peripheries tangentially juxtaposed in said inclined plane with said line of juxtaposition above the level of the cleaning liquid in said reservoir;

a pair of drying rollers mounted in said drying compartment rearward of said squeegee rollers a distance less than the length of said credit card on parallel shafts disposed parallel to said feed roller shafts, said rollers having their peripheries tangentially juxtaposed in said inclined plane, and having heating means operatively associated therewith;

a card discharge member mounted in said housing rearward of said drying rollers a distance less than the length of said credit card and adjacent said inclined plane, said card discharge member being disposed to receive and retain a credit card passed through said drying rollers;

a card delivery chute in said scrubbing chamber with its rearward end pivotally mounted adjacent said feed rollers and its forward end extending upwardly and forwardly into alignment with said card receiving slot, said chute having its forward end normally supported adjacent said slot by a float disposed in said cleaning liquid in said reservoir, and being pivotally movable downward into alignment with said inclined plane by forced alignment of a credit card disposed in said slot upon engagement of its leading edge with said feed rollers; and

a drive motor mounted in said housing; drive interconnection means drivingly interconnecting said drive motor with at least one roller of each of said pairs of rollers, said drive interconnection means being disposed to rotate said pair of scrubbing rollers in an opposite direction to the direction of rotation of said other pairs of rollers.

14. A credit card cleaning device as described in claim **13** in which:

said scrubbing rollers each have liquid retaining surface;

said drying rollers each have a liquid absorbent surface and internal heating elements; and

said drive interconnection means is disposed to drive said scrubbing rollers at a greater peripheral speed than said other rollers.

* * * * *