US00D895386S

(12) **United States Design Patent** (10) **Patent No.: US D895,386 S**
Nemoto (45) **Date of Patent: ** Sep. 8, 2020**

(54) **CONTROLLER FOR WIRE INSULATION STRIPPING TOOL**

(71) Applicant: **Hakko Corporation**, Osaka-shi, Osaka (JP)

(72) Inventor: **Hisao Nemoto**, Osaka (JP)

(73) Assignee: **HAKKO CORPORATION**, Osaka-shi, Osaka (JP)

(**) Term: **15 Years**

(21) Appl. No.: **29/681,836**

(22) Filed: **Feb. 28, 2019**

(30) **Foreign Application Priority Data**

Sep. 3, 2018 (JP) 2018-019206

(51) **LOC (12) Cl.** **08-05**

(52) **U.S. Cl.**
USPC **D8/29.1**

(58) **Field of Classification Search**
USPC D8/14, 29.1, 30; D15/144, 144.1, 144.2
CPC B23K 3/027; B23K 3/033; B23K 3/03; B23K 3/0478; H02G 1/12; H02G 1/1275; H02G 1/1278
See application file for complete search history.

(56) **References Cited**

U.S. PATENT DOCUMENTS

4,418,268 A * 11/1983 Munshaw B23K 3/027 219/240
5,048,742 A * 9/1991 Fortune B23K 3/00 219/227
D357,263 S * 4/1995 Soderholm D15/144.2
D415,435 S * 10/1999 Yoshimura D10/50
D490,448 S * 5/2004 Ishihara D15/144
D530,349 S * 10/2006 Ishihara D15/144.2
D550,731 S * 9/2007 Ishihara D15/144.2
D620,328 S * 7/2010 Masaki D8/30
D621,861 S * 8/2010 Kita D15/144
D641,600 S * 7/2011 Fukuda D8/29.1
D703,715 S * 4/2014 Kita D15/144
D740,339 S * 10/2015 Teraoka D15/144.2
D762,754 S * 8/2016 Kita D15/144.2
D780,241 S * 2/2017 Teraoka D15/144.2
9,687,927 B2 * 6/2017 Stuckey B23K 3/027
D829,791 S * 10/2018 Fischer D15/144.2

* cited by examiner

Primary Examiner — Philip S Hyder
(74) *Attorney, Agent, or Firm* — Squire Patton Boggs (US) LLP

(57) **CLAIM**

The ornamental design for a controller for wire insulation stripping tool, as shown and described.

DESCRIPTION

FIG. **1** is a perspective view of a controller for wire insulation stripping tool;
FIG. **2** is a front view thereof;
FIG. **3** is a rear view thereof;
FIG. **4** is a left side view thereof;
FIG. **5** is a right side view thereof:
FIG. **6** is a top view thereof; and,
FIG. **7** is a bottom view thereof.
The broken lines depict portions of the controller for wire insulation stripping tool in which the design is embodied that are not considered part of the claimed design.
The dashed lines show a boundary between the claimed design and unclaimed portions.

1 Claim, 7 Drawing Sheets

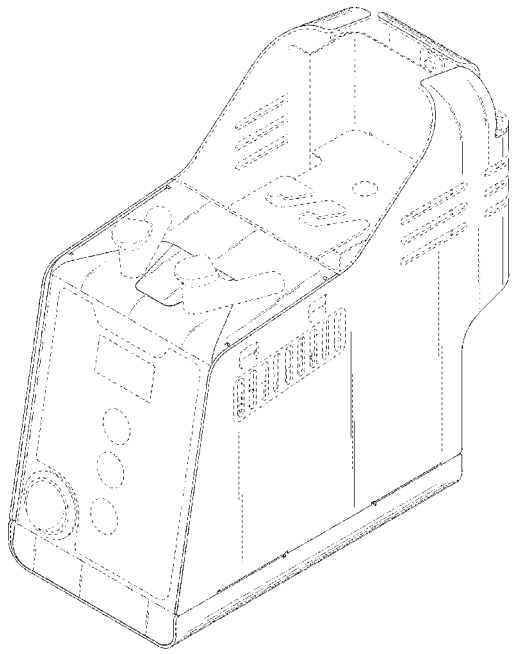

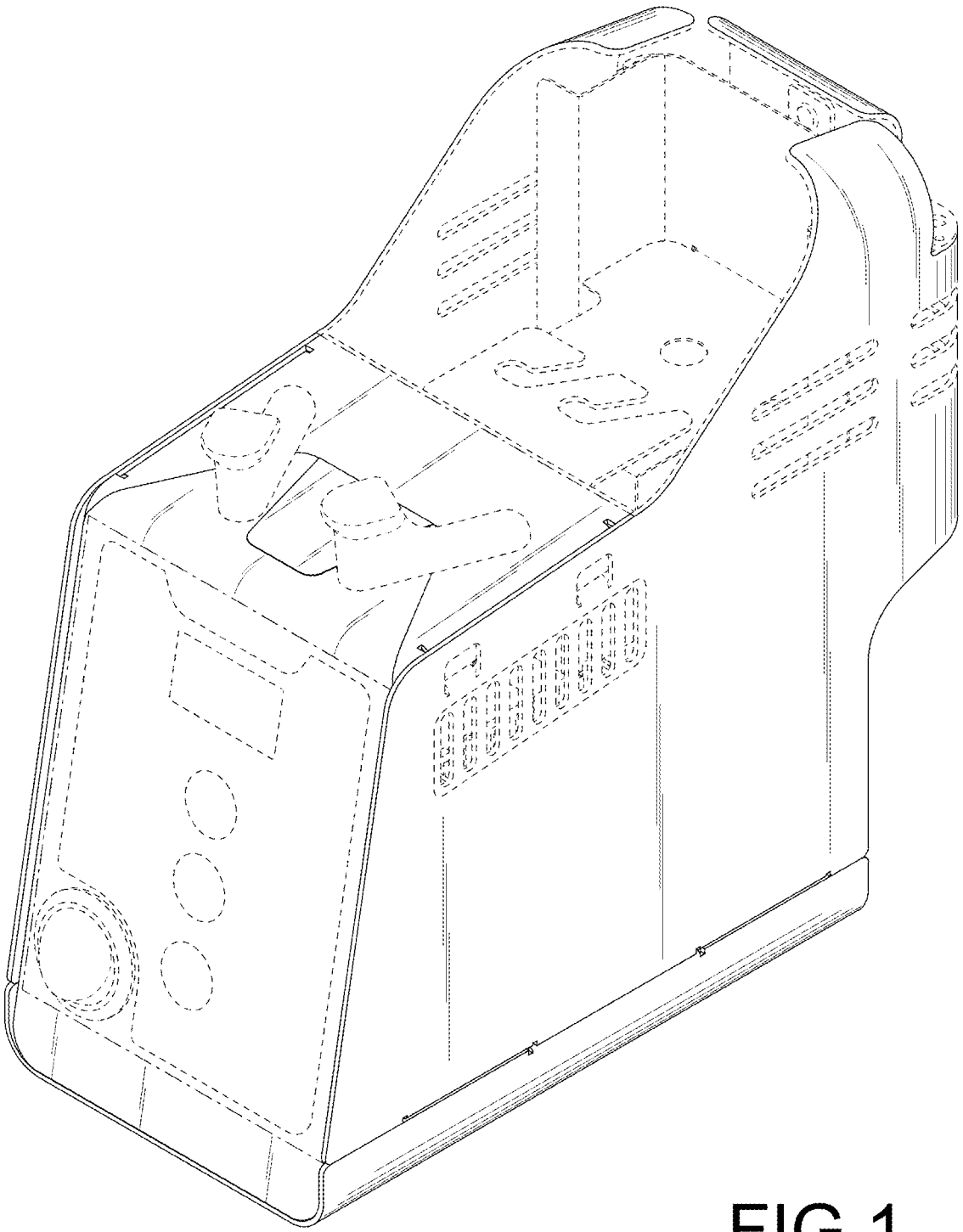

FIG.1

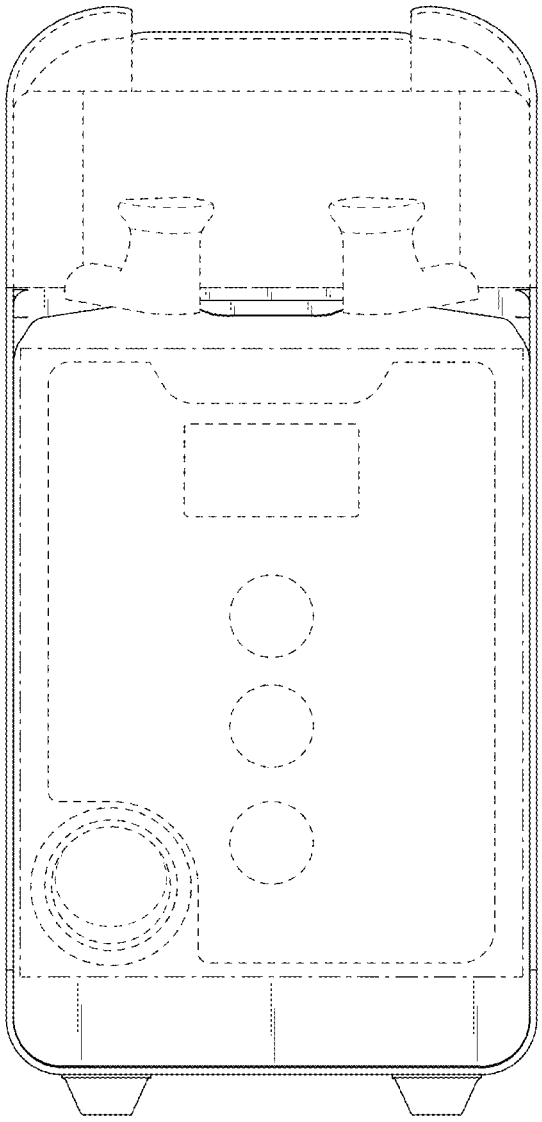

FIG.2

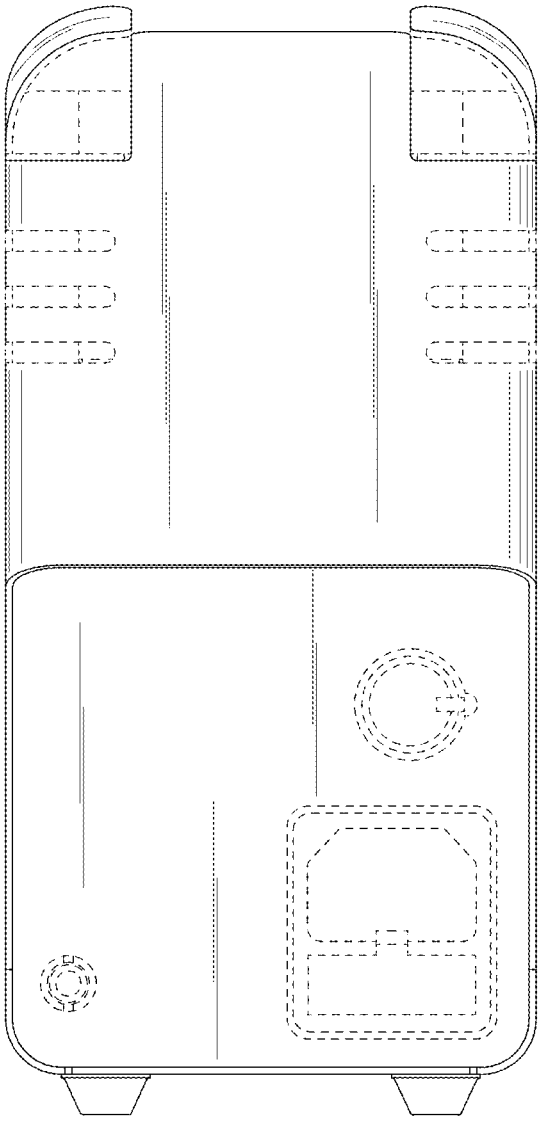

FIG.3

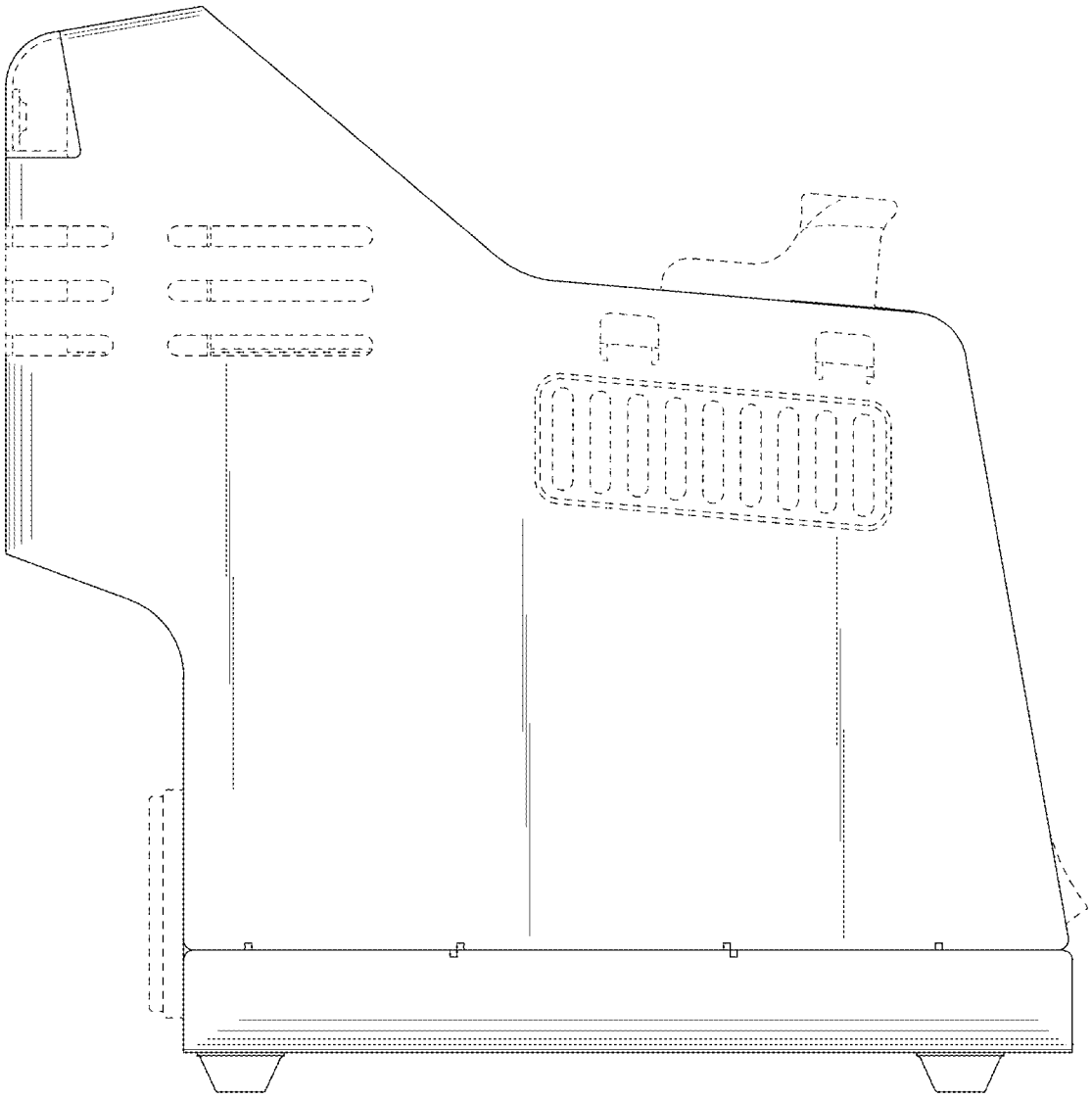

FIG.4

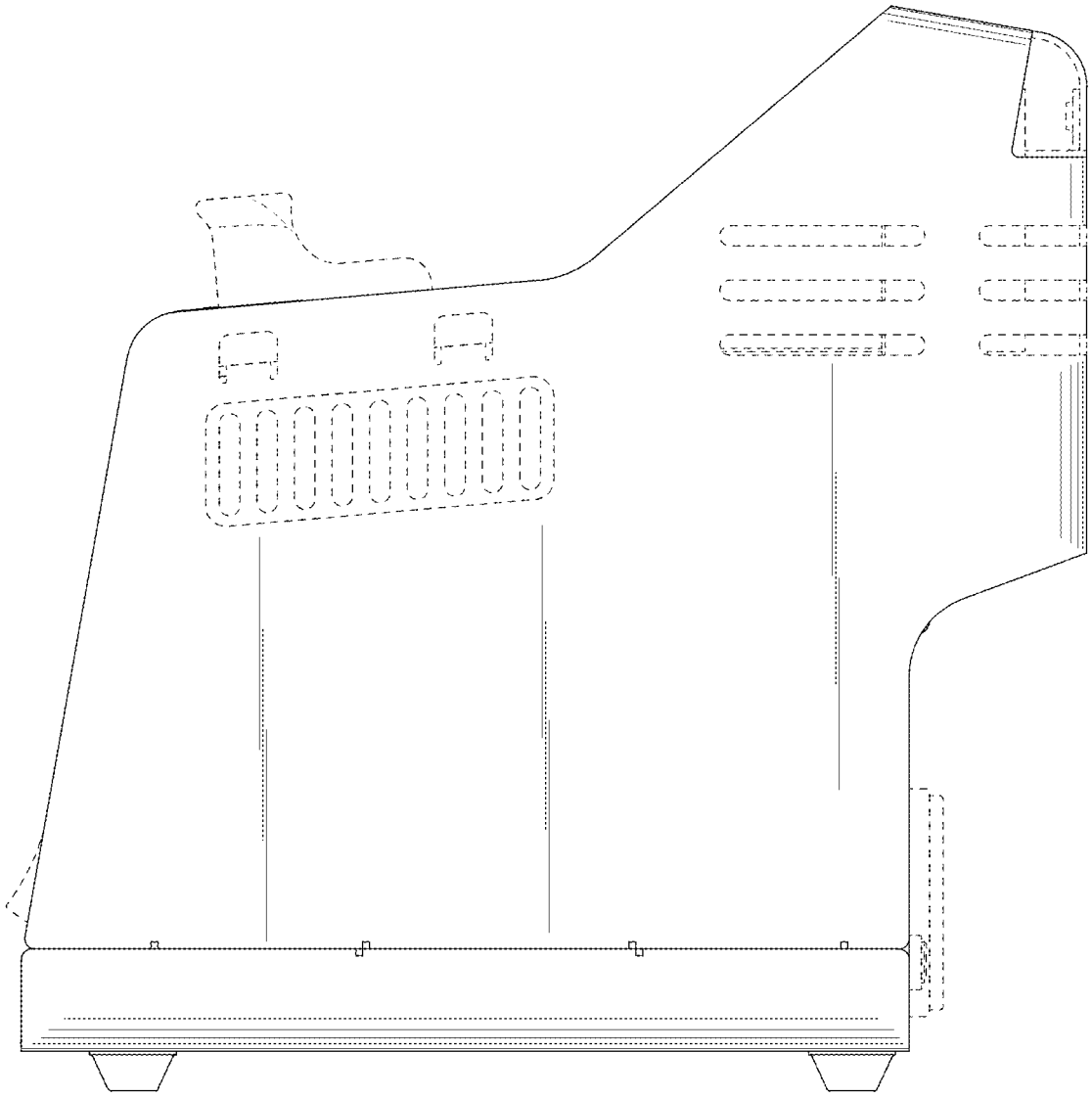

FIG.5

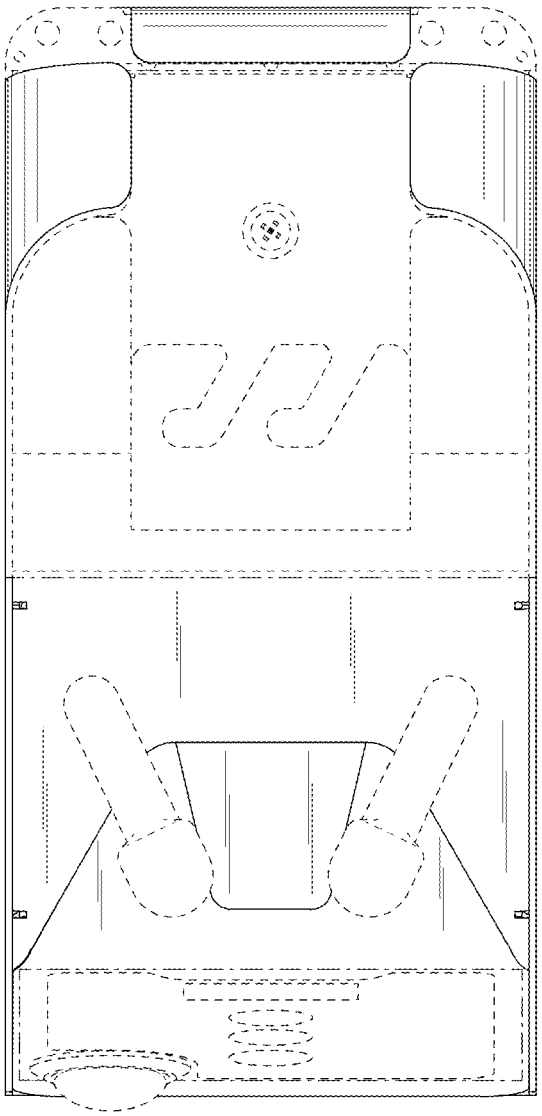

FIG.6

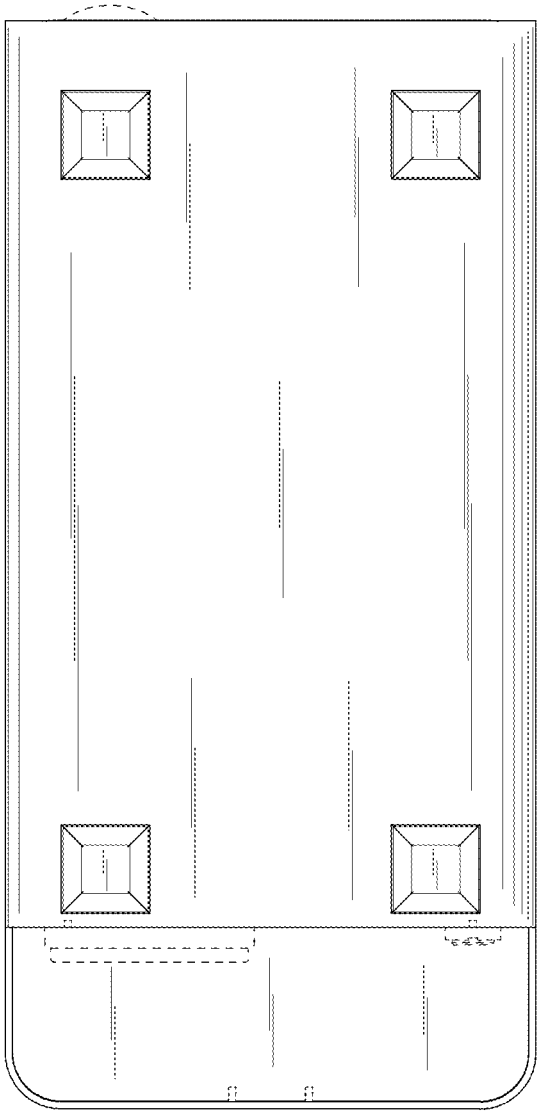

FIG.7