Sept. 2, 1941. W. F. GRUPE 2,254,217

METHOD AND MEANS FOR APPLYING PATCHES TO FOUNDATION MATERIAL

Filed April 3, 1937 4 Sheets-Sheet 1

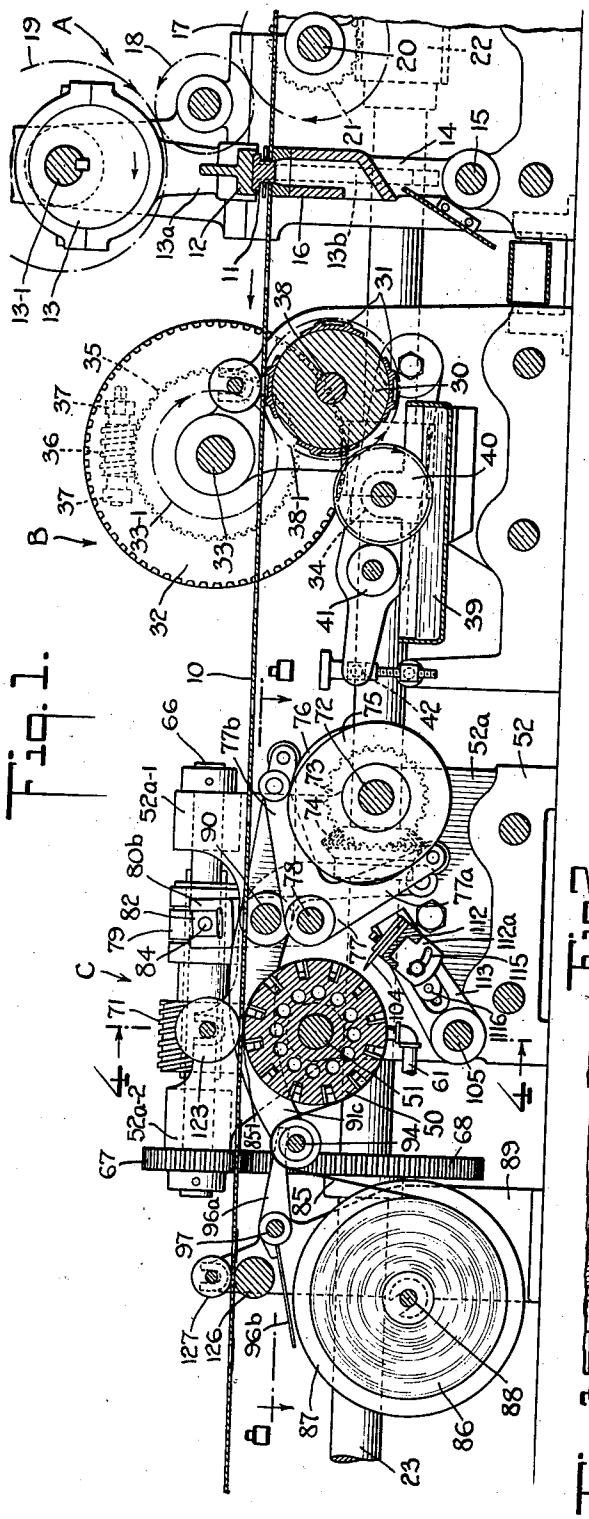

Fig. 1.

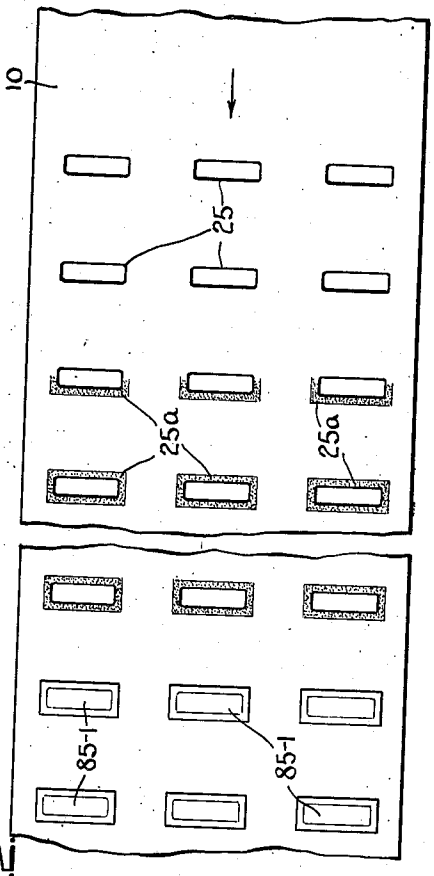

Fig. 2.

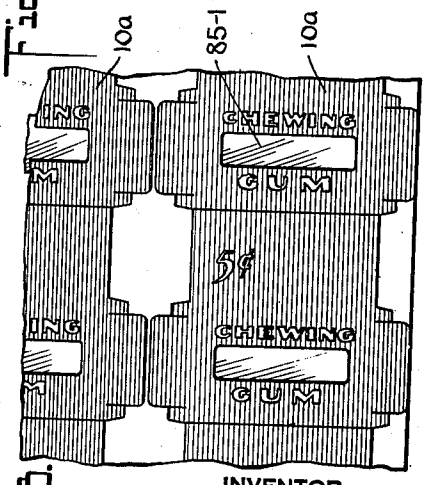

Fig. 3.

INVENTOR
William F. Grupe
BY Henry J. Lucke
HIS ATTORNEY

Sept. 2, 1941. W. F. GRUPE 2,254,217

METHOD AND MEANS FOR APPLYING PATCHES TO FOUNDATION MATERIAL

Filed April 3, 1937 4 Sheets-Sheet 2

Fig. 4.

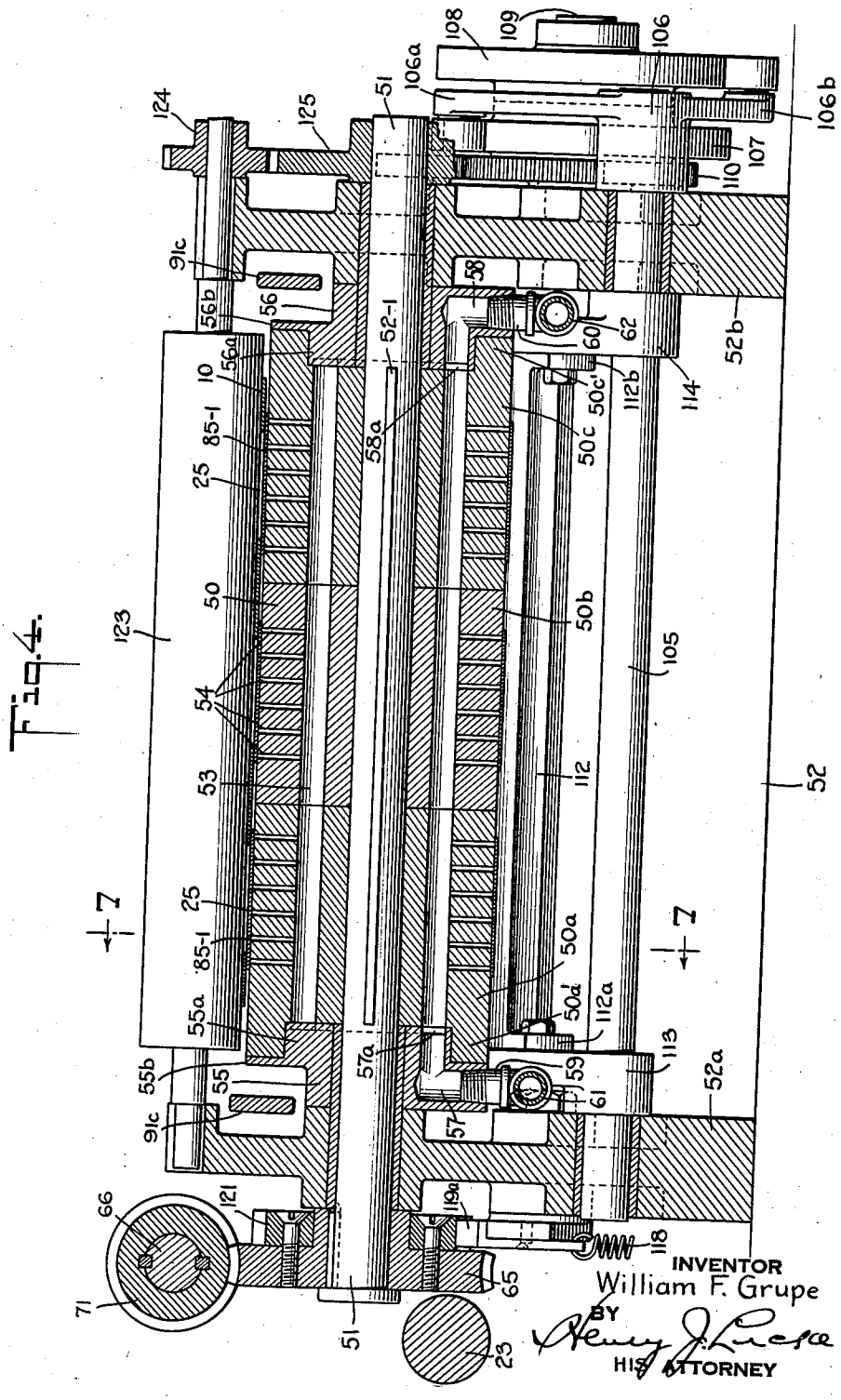

INVENTOR
William F. Grupe
BY
Henry J. Lucas
HIS ATTORNEY

Sept. 2, 1941. W. F. GRUPE 2,254,217

METHOD AND MEANS FOR APPLYING PATCHES TO FOUNDATION MATERIAL

Filed April 3, 1937 · Sheets-Sheet 3

Fig. 5.

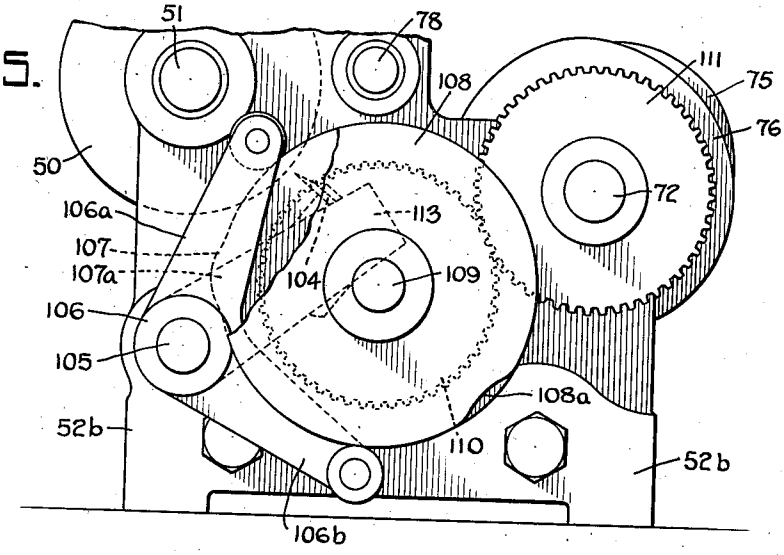

Fig. 6.

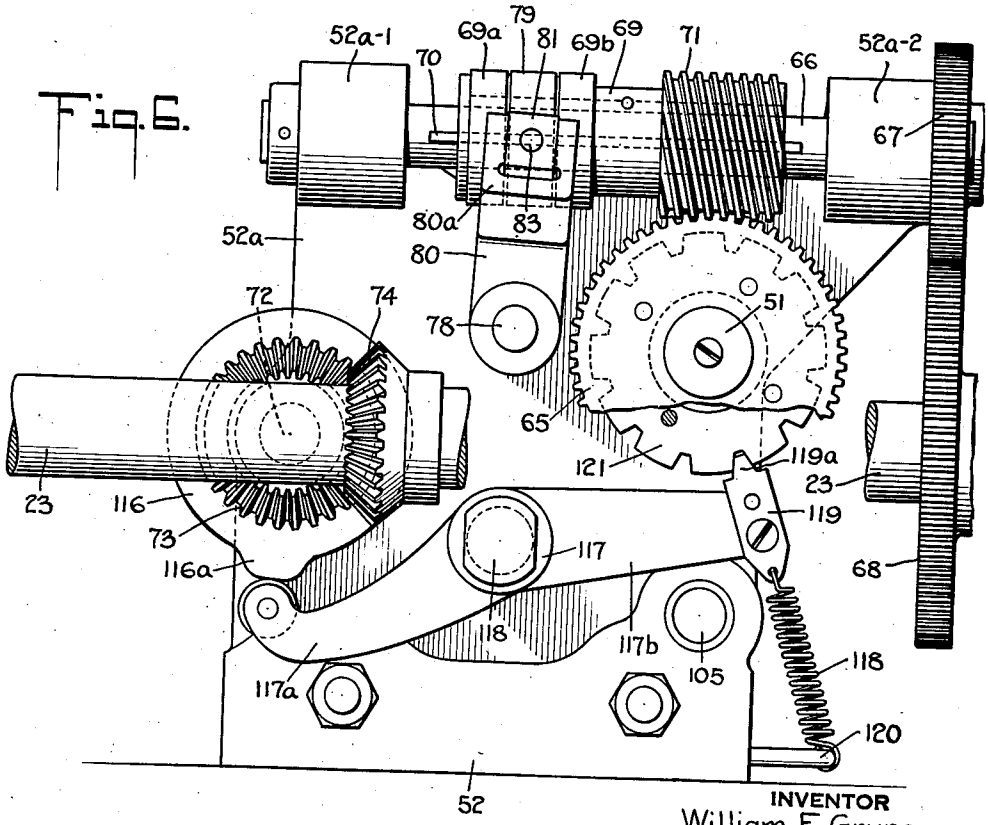

INVENTOR
William F. Grupe
BY
Henry J. Lucke
HIS ATTORNEY

Sept. 2, 1941. W. F. GRUPE 2,254,217

METHOD AND MEANS FOR APPLYING PATCHES TO FOUNDATION MATERIAL

Filed April 3, 1937 4 Sheets-Sheet 4

Fig. 7.

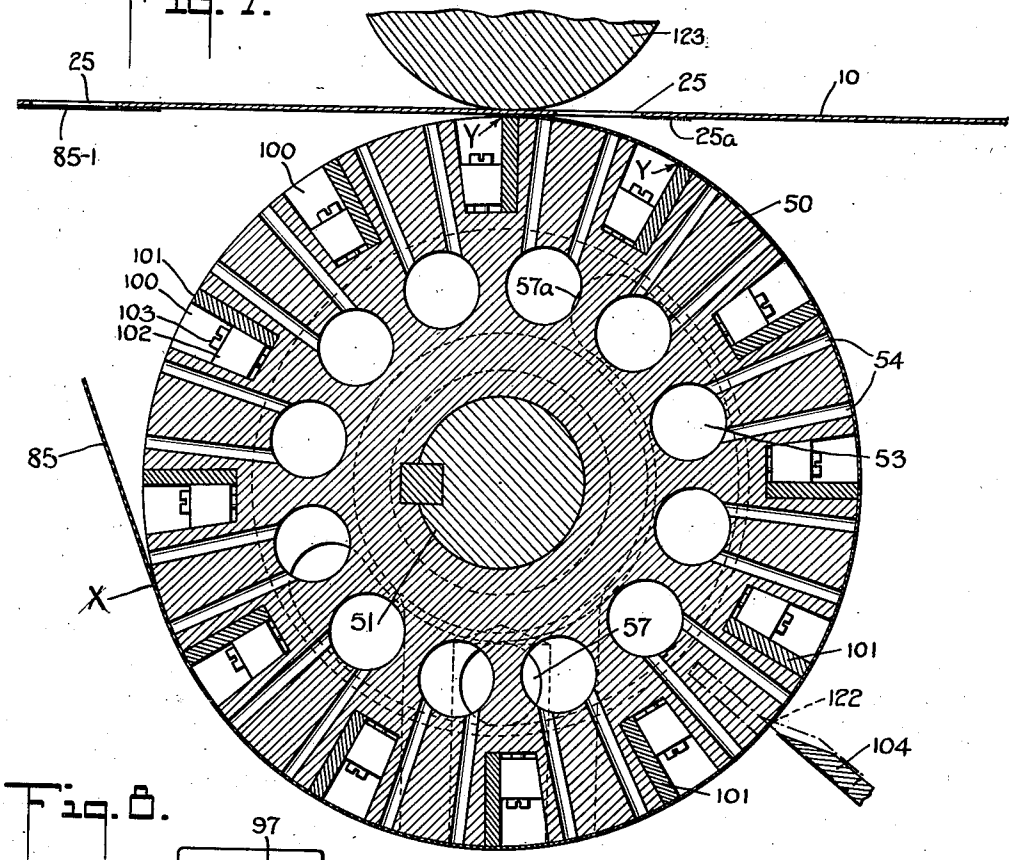

Fig. 8.

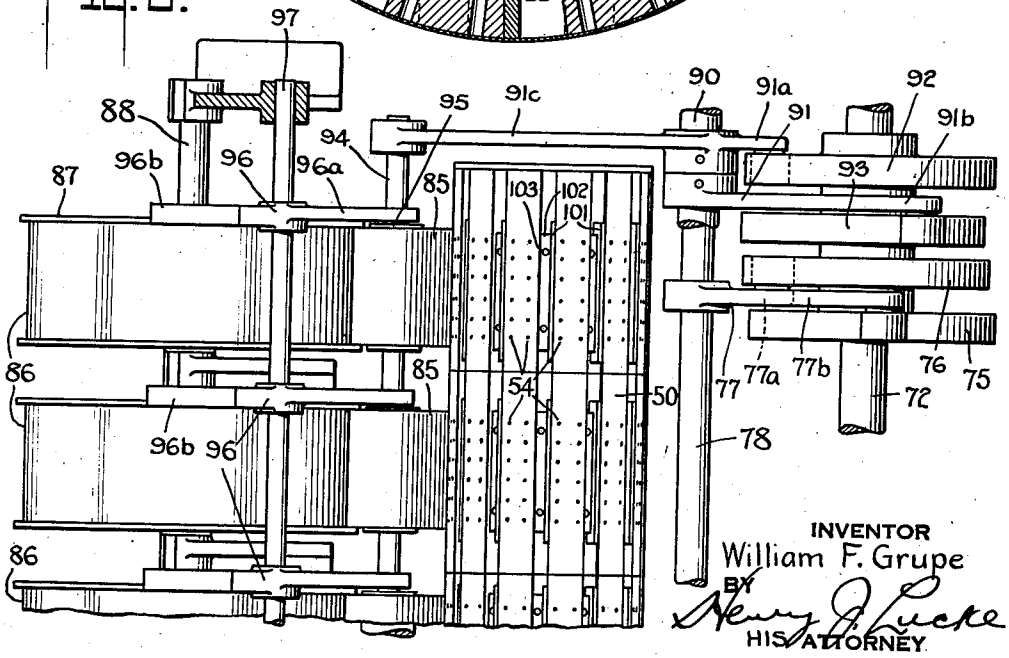

INVENTOR
William F. Grupe
BY
Henry J. Lucke
HIS ATTORNEY

Patented Sept. 2, 1941 2,254,217

UNITED STATES PATENT OFFICE

2,254,217

METHOD AND MEANS FOR APPLYING PATCHES TO FOUNDATION MATERIAL

William F. Grupe, Lyndhurst, N. J., assignor to Champlain Corporation, a corporation of New York

Application April 3, 1937, Serial No. 134,713

20 Claims. (Cl. 93—36.6)

This invention relates to a method and apparatus for producing, from a continually traveling web, a strip of material having flexible sheets affixed at spaced locations along its length.

More particularly the invention is concerned with the production of a continuous strip having perforations spaced apart along its length and having each perforation covered with an individual sheet of flexible material.

The invention is especially applicable to the continuous production of blanks for cartons equipped with a transparent window in one or more of its walls, and will hereinafter be described with particular reference to this specific adaptation.

In general, the procedure of the method involves operating in sequential stages upon each of successive locations spaced apart along the length of a web of strip material, as the web travels continually. The first operative stage may comprise perforating the web, as it travels, at successive locations spaced apart along its length. The second operative stage may comprise coating the margin of each perforation with adhesive as the web travels. The third stage may comprise applying an individual flexible sheet over each perforation and its adhesive-coated margins, as the web travels. All of these operative stages are accomplished in correlated timed sequence with respect to the individual web location being treated, and at velocities substantially synchronized with the velocity of travel of the web.

The third stage may include severing the individual flexible sheets from a continuous strip of flexible sheet material immediately prior to feeding the sheets so severed into the zone of application proximate the continually traveling web. The severing is advantageously accomplished while the particular portion of the continuous strip concerned, remains stationary. Both the severing and the application of the individual sheets to the web are accomplished in correlated timed sequence with the prior stages of operation on a particular web location.

The outstanding feature of the method in general, therefore, is the accomplishing of perforation, coating with adhesive, and the applying of flexible sheets to the web, simultaneously, but successively along the length of the web, as the web travels, the operations being sequential so far as a particular location on the traveling web is concerned and being correlated in motivation, one with the others, and at a speed synchronized with the speed of travel of the web.

In particular, the manner of applying the individual flexible sheets to their respective locations on the traveling web is an outstanding feature of the invention. The individual flexible sheet is held upon a carrier during passage into the zone of application of the sheet to the web. As the sheet enters the stated zone, a leading portion thereof is brought into contact with a leading portion of the area-of-application on the web as the web travels. Thereafter, the remaining trailing portion of the sheet is progressively brought into contact with the remaining trailing portion of the stated area-of-application as the sheet is progressively carried into and through the stated zone of application. As the sheet passes into and through the zone of application, the velocity of travel of the carrier, and therefore of the sheet, is substantially synchronized with the velocity of travel of the web. During the travel of the sheet through the zone of application, the hold of the carrier thereon is released, the area-of-application on the web seizing hold of the sheet progressively and removing it from the zone of application with the travel of the web.

In carrying out the method, the traveling web may be directed through a series of mechanisms forming the components of a machine.

In a preferred embodiment of this machine, concerned especially with continuously producing blanks for cartons equipped with a transparent window in one of its walls, the first of the series of mechanisms is a perforator or punching press constructed according to the disclosure of my U. S. Patent No. 2,192,707, issued March 5, 1940, entitled Press for operating upon continually traveling material.

The second mechanism in the series is preferably a cameo printing cylinder having the contact surfaces of the raised type formations thereof corresponding in configuration to the configuration of the margins of each perforation produced by the aforestated punching press and desired to be adhesively coated, and having the type formations arranged on the surface of the cylinder to coordinate with the spacing between perforations. The printing cylinder is adapted to transfer adhesive from a supply of same to the appropriate locations on the traveling web.

The third of the series of mechanisms may comprise a cylindrical carrier operating in proximity to the surface of the web to which the adhesive has been applied. Suction, operative at the surface of the cylinder, serves to hold the free end of a continuous strip of flexible sheet

material, specifically, in this case, transparent cellulose acetate sheet. A knife, operative at intervals when the carrier cylinder remains stationary, serves to sever the individual sheets from the held end of the strip, the so-severed sheet thereafter being held in undisturbed position for feeding into the zone of application proximate the traveling web. Rotation of the carrier cylinder accomplishes feeding of the leading edge of the carried sheet into contact with the leading edge of the adhesive-coated margin of a perforation. As the carrier cylinder continues to rotate in the direction of travel of the web, and thus to progressively enter the zone of application, the remainder of the sheet is fed progressively into contact with the adhesive coated margins of the perforation and over the perforation. Coincidentally with the progressive feeding of the sheet, there is a cut-off of the suction, and consequently a release of the positive hold of the carrier cylinder on the sheet. Rotation of the carrier cylinder is intermittent. At the periods when the carrier cylinder is stationary, severing is accomplished. As the carrier cylinder rotates between stationary periods, application of the flexible sheet to the web is accomplished. The speed of rotation of the carrier cylinder while applying the sheet to the web is substantially synchronized with the speed of travel of the web.

The successive operations of the component mechanisms of the series are correlated in timed sequence in accomplishing complete processing of the successive locations-to-be-processed of the traveling web.

Referring to the drawings:

Fig. 1 illustrates one embodiment of apparatus for carrying out the method of this invention. The apparatus comprises a series of machine mechanisms correlated in operation. The view represents a vertical section taken centrally and lengthwise of the series of machine mechanisms;

Fig. 2 illustrates in bottom plan, fragmentary portions of a web of strip material at successive stages in the production of blanks for cartons equipped with transparent windows;

Fig. 3 illustrates in top plan a fragmentary portion of the completely prepared blanks of Fig. 2 as components of the continuous strip or web of such blanks;

Fig. 4 represents a vertical section taken on the line 4—4, Fig. 1;

Fig. 5 represents a right-side elevation of the particular machine mechanism illustrated in Fig. 4;

Fig. 6 illustrates a left-side elevation of the particular machine mechanism illustrated in Fig. 4;

Fig. 7 represents a vertical section taken on the line 7—7, Fig. 4; and

Fig. 8 represents a top plan view taken on the line 8—8, Fig. 1.

Referring to the drawings: at 10 is indicated a web of sheet material traveling through a series of machine mechanisms indicated at A, B and C, respectively, pursuant to a preferred practice of the method of the instant invention. In the present case the web 10 is of opaque, light cardboard stock suitable as the material for cartons used in the packaging of various merchandise. According to the illustrations a plurality of cartons, each having a transparent window in one of its walls, are being produced continuously as components of the continually traveling web 10, severing of the individual blanks from the web taking place at a stage subsequent to those stages included within the present invention.

The machine mechanism indicated at A, Fig. 1, represents the first operative stage in the present practice. Successive perforation of the window openings at spaced locations along the length of the web is accomplished as the web travels continually.

The perforating mechanism is desirably an embodiment of that disclosed in my U. S. Patent No. 2,192,707, hereinbefore referred to. In general this mechanism comprises a series of male punches 11 spaced apart along and carried by a punch holder member 12 extending transversely across the web 10 at substantially right angles to the length thereof. The punch holder member is carried at each end by arms 13a, 13a (only one is illustrated) of eccentrics 13, 13, mounted on a common shaft 13—1. The arms 13a, 13a have depending extension 13b, 13b received respectively within respective tubular arms 14, 14 (only one is illustrated) which are pivoted at ends of a rocker shaft 15. Female dies for coordination with the male punches 11 are spaced apart along a die holder member 16 extending transversely across the web 10 and secured to and between the tubular arms 14 in opposite placement to the punch holder member 12.

A train of gears 17, 18 and 19, the gear 17 being mounted on a shaft 20 which carries at its opposite end a pinion 21 meshing with a worm gear 22, the latter being in turn rigidly mounted on a main drive shaft 23, serves to transmit motion from the main drive shaft 23 to the eccentrics 13, 13. Rotation of the shaft 13—1, will effect coordinated interaction of the punches 11 with respective female members of the die holder 16 once in every revolution.

The web 10 receives its motion from the main drive shaft 23 in any suitable manner. The throw of the eccentrics 13 is such that the velocity of travel of the punches 11 and of the dies, mutually, is substantially synchronized with the velocity of travel of the web, during interaction.

The ratio between the speed of rotation of main drive shaft 23 and the speed of rotation of shaft 13—1, which is set by the various gears, determines the spacing of the perforations along the length of the web. The female dies of the holder 16 coordinate with the punches 11 and travel mutually therewith during the running punch operation, by reason of the sliding connection of the extensions 13b in the tubular arms 14. Thus, sets of perforations 25 spaced apart along the width of the web are had successively along the length of the web as the web travels, see Fig. 2.

The machine mechanism B, representing the second operative stage in the present practice, comprises means for applying adhesive to the margins of the perforations 25 as the web 10 travels.

The mechanism conveniently comprises a printing cylinder 30 having type formations 31, the contact surfaces of each of which correspond in configuration to the configuration of a limited marginal area surrounding the respective perforations 25 of the web. The type formations 31 are spaced apart along the axial length of the cylinder with respect to the width of the web, in sets corresponding to the placement of the punches 11 on their holder 12. The transverse sets of formations 31 are spaced around the circumference of the cylinder 30 to accord with

the distance between individual sets of perforations 25 in the web 10.

The cylinder 30 is rotated by the main drive shaft 23 through the medium of gearing adapted for fine adjustment in attaining registry between the type formations 31 and the respective perforations 25 in the web. The gearing may comprise gear 32 journalled on the shaft 33 and disposed in mesh with a worm 34 rigidly mounted on the main drive shaft 23. A gear 35 is rigidly mounted on the shaft 33 immediately adjacent the gear 32, and is in mesh with a worm 36 threadedly carried between extensions 37, 37 which extend rigidly from the face of gear 32 adjacent gear 35. The shaft 33 transmits motion to the shaft 38 on which the cylinder 30 is rigidly mounted, by means of meshing gears, indicated at 33—1 and 38—1, respectively.

The main drive shaft 23 controlling the travel of the web 10, thus, also controls the rotation of cylinder 30. The various gear ratios and the resulting speed of rotation of printing cylinder 30 are such that successive type formations 31 will contact marginal areas of successive perforations 25 of the web as the web travels continually. Adjustment for perfect registry is had by screwing the worm 36 either direction in its supports 37, 37.

A bath of liquid adhesive 39 is maintained adjacent the cylinder 30. A transfer roller 40 conveniently transfers the liquid adhesive from the bath 39 to the contact surfaces of type formations 31, as illustrated. A doctor roller 41 may be mounted in an adjustable arm 42 for regulating the quantity of adhesive transferred by the roller 40 from the bath to the contact surfaces. Perforations 25, having adhesively coated margins resulting from this second operative stage, are indicated at 25*a*, Fig. 2.

The mechanism indicated by C represents the third operative stage in the present practice. It effects severing of individual sheets of flexible window material, such as a cellulose acetate sheeting, from continuous strips of the material, and the application of such individual sheets successively to the adhesively treated areas, and over the window openings, of the web 10 as the web travels continually.

The primary element of this mechanism is a carrier or suction cylinder 50. It is mounted for rotation on a shaft 51 with its circumferential surface disposed in tangential relation to the web 10, see Fig. 4. Shaft 51 extends across the width of the web. The shaft 51 may be journalled in side walls 52*a*, 52*b* of a supporting frame structure 52.

The suction cylinder 50 is, in the present case, divided into three sections 50*a*, 50*b* and 50*c* disposed in side by side relation, and collectively splined, by the feather 52—1, to shaft 51 for simultaneous rotation therewith. Sections 50*a*, 50*b* and 50*c* are disposed adjacent the paths of travel of the three series of perforations 25 extending lengthwise along the web 10.

A plurality of bore holes 53 run through the body of suction cylinder 50 preferably parallel and in a circle concentric with the axis thereof, see especially Fig. 7. The bore holes of component sections of the suction cylinder are aligned and are maintained in alignment at all times by the feather 52—1 in forming the composite bore holes 53 which run from end to end of the cylinder.

Each section of the suction cylinder 50 has a plurality of passages 54 formed therein connecting the bores with the circumferential surface. The passages 54 in each of the sections 50*a*, 50*b* and 50*c* are spaced apart from one another circumferentially of the section and throughout that portion of its width which registers with a path of travel of a series of the perforations 25 extending lengthwise along the web 10; this, for a purpose to be hereinafter made clear. As illustrated, see especially Fig. 7, each of the bores 53 has a set of two rows of passages 54, extending across the width of the suction cylinder, in communication therewith.

Serving to cap and seal the ends of the suction cylinder 50 as it rotates, are stationary shoes 55 and 56, respectively, having hub portions, 55*a* and 56*a* respectively, and flange portions 55*b* and 56*b*, respectively, the hub and the flange portions of each, together forming an angular bearing surface. Against the bearing surfaces fit snugly the annular ends 50*a*′ and 50*c*′, respectively, of the suction cylinder 50.

Provision is made for passages 57 and 58, respectively, in the shoes 55 and 56 by forming a radial extension on the hub of each shoe at an appropriate location. The passages 57 and 58 extend respectively through the extensions on the hubs and open into those surfaces of the shoes which bear against the body of the suction cylinder 50. The openings so formed are in alignment with the circular path which is taken by the group of cylindrical bores 53 when the suction cylinder is rotated. Further, the stated surfaces of the shoes which bear against the body of the suction cylinder are indented as at 57*a* and 58*a* in registry with a portion of the stated circular path for providing suction throughout a limited plurality of the bores 53, simultaneously. Nipples 59 and 60, respectively, of suction pipes 61 and 62 screw into the free ends of passages 57 and 58, respectively.

The suction cylinder 50 and its shaft 51 are rotated intermittently during operation of the machine mechanism of which they are component elements. They receive their motion from the main drive shaft 23. In translating the continuous motion of the main drive shaft into the required intermittent motion, the following mechanism is employed:

The shaft 51 extends outwardly from the side wall 52*a* of the frame 52, and has rigidly mounted on the extending end a worm gear 65. Journalled in bearing arms 52*a*—1 and 52*a*—2 which extend outwardly from the side wall 52*a* of the frame 52, is a shaft 66. A gear 67, rigidly mounted on the extending end of shaft 66, meshes with a gear 68, rigidly mounted on main drive shaft 23. Thus, shaft 66 will be rotated continually by the rotation of main drive shaft 23.

Slidably mounted on the shaft 66 between the bearing arms 52*a*—1 and 52*a*—2 is a worm assembly 69. It rotates with the shaft 66 by reason of its splined connection, see 70, therewith. A worm 71, as a rigid component member of the assembly 69, meshes with the worm gear 65 for effecting rotation of the suction cylinder 50 directly from the main drive shaft 53.

A master cam shaft 72, see especially Fig. 6, journalled between the frame side walls 52*a*, 52*b* has rigidly mounted on its end extending outwardly from the side wall 52*a*, a miter gear 73 in mesh with a miter gear 74 secured on the main drive shaft 23. Rigidly mounted on the cam shaft 72 is a set of eccentric cams 75 and 76, (Fig. 1) the two cams being disposed in face to face adjacent relation for coordination, respec-

tively, with the arms 77*a* and 77*b* of the V-lever 77, rigidly mounted on the rock-shaft 78. The eccentricities of the cams 75 and 76 are disposed with respect to each other as found suitable in effecting rocking movement of the shaft 78 as the cam shaft 72 rotates continually in one direction.

Mounted for free movement on the worm assembly 69 between stationary guide collars 69*a* and 69*b*, is a collar 79. Rigidly mounted on the end of rock-shaft 78 which protrudes outwardly from the frame side wall 52*a*, is a forked rocker-arm 80 whose forks 80*a* and 80*b* are disposed around collar 79. The free ends of the stated forks are bifurcated to provide guideways for sliding blocks 81 and 82, respectively. The blocks are journalled respectively, to stub shafts 83 and 84 formed as extensions on the outer face of collar 79. Accordingly, rocking motion of the rock-shaft 78 will effect, through the medium of the forked rocker-arm 80, reciprocatory motion of the worm assembly 69 and its component worm gear 71.

Since the shaft 66 and its thereon mounted worm assembly 69 are rotated directly from the main drive shaft 23, the worm 71 will be rotated at a speed related to the speed of rotation of the main drive shaft 23 according to the various intermediate gear ratios. Worm 71 meshes with worm gear 65 for transmitting rotary motion to suction cylinder 50.

Since the rock-shaft 78 is actuated by the main drive shaft 23, the forked rocker-arm 80 will transmit reciprocatory motion to worm-gear assembly 69 in accordance with the dimensional relationship between the V-lever arm 77 and the set of cams 75 and 76, in accordance with the relationship of the eccentricities of the cams 75 and 76, one to the other, and in accordance with the ratio between miter gears 73 and 74.

The reciprocatory motion of worm assembly 69 will modify the rotative motion transmitted by worm 71 to worm gear 65 and therewith to suction cylinder 50. Thus, by providing proper relationships between the various component elements transferring motion from the main drive shaft 23, the speed of rotation of the suction cylinder and the acceleration and deceleration of that speed, can be controlled.

In the present case, strips 85 of cellulose acetate sheeting are respectively fed to the sections 50*a*, 50*b* and 50*c* of suction cylinder 50 continuously from rolls 86 of same. The stated rolls are carried by reels 87 mounted for free rotation on the common shaft 88 supported by the frame 89.

The free ends of the strips 85 are respectively fed to the portions of the widths of the suction cylinder sections in which are formed the groups of passages 54. It is assumed that a condition of suction is maintained in the pipes 61 and 62 by any suitable source of suction, as for instance an ordinary suction pump. The indentations 57*a* and 58*a*, on the surfaces of shoes 55 and 56, respectively, which bear against the body of suction cylinder 50, extend concentrically with that portion of the circumferential surface of the suction cylinder which maintains contact with the strips 85. This area of contact extends from the location at which the strip first meets the suction cylinder, see X, Fig. 7, to the zone of application of the individual sheets to the web, see Y—Y, Fig. 7. Suction, therefore, will be simultaneously maintained throughout all of the cylindrical bores 53 comprehended by the stated zone of contact, and coincidentally, will be maintained simultaneously throughout all the passages 54 which communicate with the cylindrical bores concerned. By reason of this suction successive portions of strip 15 will be carried snugly and tightly by and against that portion of the circumferential surface of suction cylinder 50 included within the stated zone of contact. Release from the carrier cylinder will occur automatically as the strip 15 (severed as hereinafter explained) passes through the zone of application, Y, proximate the traveling web.

As aforestated, the suction cylinder 50 rotates intermittently at a circumferential speed substantially equivalent to the speed of travel of the web. Desirably, the reels 87 rotate continuously to eliminate jerky discharge of the strips 85. The continuous speed of rotation of the reels 87 will necessarily be less than the intermittent speeds of rotation of the suction cylinder in order to compensate for the latter's periods of rest. Therefore "monkey roller" means are provided to take up slack of the discharged strips 85 during the periods when the suction cylinder is at rest, and to make the slack available to the suction cylinder, in addition to the normal discharge from the reels, during its periods of rotation.

For accomplishing this, a rock-shaft 90 is journalled between frame side walls 52*a* and 52*b*. It carries the rocker 91 having the two short arms 91*a* and 91*b*. These two short arms comprise a V-lever for rocking actuation by the set of cams 92 and 93 mounted on the cam shaft 72 adjacent the cams 75 and 76. The rocker 91 has, further, a long arm 91*c* which is connected at its free end to an end of flying shaft 94. A second long arm 91*c* connects the opposite end of rock-shaft 90 with the opposite end of flying shaft 94.

Monkey rollers 95 are carried freely by the shaft 94, and are spaced along its length at intervals determined by the placement of the reels 87. The strips 85 are, respectively, passed over their corresponding rollers 95, see Figs. 1 and 8. As the cam shaft 72 rotates, the cams 92 and 93 actuate the rocker 91 to effect alternate lowering and raising of the flying shaft 94. Since the reels 87 are mounted freely on shaft 88, they will be rotated by the pull of the strips 85 therefrom. The rotation will assume the proper uniform speed naturally. Alternate lowering and raising of flying shaft 95 will, alternately, make slack of the strips 85 available to the suction cylinder as it rotates, and take up slack as the suction cylinder rests.

To check acceleration of the reels 87 as the flying shaft raises, brake means are provided. These advantageously take the form of V-levers 96 mounted on a rock-shaft 97 journalled between side walls of the supporting frame 89. Each V-lever 96 has an arm 96*a*, whose free end rests on flying shaft 94 for actuation thereby, and an arm 96*b* whose free end rests on the circumference of one side plate of a reel 87. When the shaft 94 raises, the free ends of lever arms 96*b* bear against their respective reels 87 and frictionally check any tendency toward acceleration of their speeds of rotation.

The relative eccentricities of the cams 92 and 93 and their placement on the cam shaft 72 will determine actuation of flying shaft 94, and thus the time sequence of its operation relative to the intermittent rotation of the suction cylinder.

Individual sheets must be severed from the carried ends of strips 85 for application to the adhesively treated perforations 25*a* of the traveling web 10. Severing is accomplished successively on the suction cylinder 50 during periods of rest

between intermittent stages of rotation. For this purpose the suction cylinder 50 is provided with a plurality of mutually parallel open slots 100 running along the length of the cylinder parallel with the rotative axis thereof, and spaced apart around the circumferential surface of the cylinder. The slots 100 are disposed between sets of passages 54 which communicate with the respective bores 53. Each of the slots is configurated to receive against one of its walls, lengthwise of the slot, a series of stationary shear blades 101. The individual blades of the series are disposed, respectively, in the paths of contact of the strips 85 with the suction cylinder 50, and are wedged into place by wedge blocks 102 removably secured in the slot, as by means of the screws 103. The series of shear blades of each slot are, in the present case, held against the slot wall which trails during rotation of the suction cylinder.

Adapted to coordinate with the series of stationary shear blades 101 while the suction cylinder remains at rest between periods of rotation, is a flying blade 104. It is mounted for intermittent actuation by the main drive shaft 23, as follows:

A rock-shaft 105 (Fig. 5) is journalled between frame side walls 52a and 52b adjacent suction cylinder 50. One of its ends projects outwardly from frame side wall 52b, and has rigidly mounted thereon a V-lever 106. A set of circular cams 107 and 108, mounted on a shaft 109, serves to rock the V-lever 106 through the lever arms 106a and 106b, respectively. The shaft 109 is journalled in the frame side wall 52b, and extends outwardly therefrom. It carries, in addition to the set of cams 107 and 108, the gear 110 in mesh with gear 111 feathered to that end of control cam shaft 72 which extends from frame side wall 52b. The shaft 109 and the thereon mounted set of cams are, therefore, actuated directly by control cam shaft 72.

A blade holder 112 is rigidly but adjustably mounted on the rock-shaft 105 through the medium of carrier arms 113 and 114. The blade holder 112 extends between the frame side walls 52a and 52b substantially the length of the suction cylinder. For the sake of adjustment its legs 112a and 112b are each arcuately slotted as at 115, and are bolted through the slots to blocks, as at 116, secured respectively, to carrier arms 113 and 114 in slideways running along the length of the arms. The flying blade 104 is adjustably secured in the blade holder 112. By proper adjustment of the flying blade in its holder, and of the holder on its carrying arms, shearing coordination may be established between individual series of stationary shear blades 101 and the flying blade 104 during periods of rest of the suction cylinder.

As the cam shaft 72 rotates, the set of cams 107 and 108 will rock the shaft 105 and will cause reciprocation of the flying knife 104 to and from the circumferential surface of suction cylinder 50. The reciprocatory stroke of the knife is determined by the throw of the V-lever 106. The latter is precisely regulated by the configuration of the two cams 107 and 108, the former cam being provided with an actuating nub 107a, and the latter with an oppositely configurated actuating depression 108a.

In effecting coordination between the flying blade 104 and the individual series of stationary blades 101, the suction cylinder 50 is halted abruptly, between each period of rotation, in such a position that a series of stationary shear blades, will be disposed in shearing alignment with the flying blade. This is controlled from the master cam shaft 72, as follows:

A cam 116 (Fig. 6) having a nub 116a is rigidly mounted on that end of the master cam shaft 72 which extends outwardly from frame side wall 52a. A lever 117 is mounted on a short shaft 118, the latter being journaled in the frame side wall 52a and extending outwardly therefrom. The free end of the lever arm 117a is normally held in the circumferential path of rotation of cam 116 by the coil spring 118 acting on the free end of the opposite lever arm 117b. The spring 118 is directly connected at one of its ends to a pawl 119 rigidly mounted on the free end of lever arm 117b, and secured at its other end to the rigid post 120. The lever arm 117b and its carried pawl 119 lie adjacent the circumferential path of rotation of a notched wheel 121 rigidly secured to the inner face of worm gear 65 for rotation therewith, see Fig. 4.

As the cam 116 rotates, its nub 116a will depress lever arm 117a against the resistance of spring 118, and will bring the toothed end 119a of pawl 119 into engagement with a notch of the notched wheel 121. The latter will effect instantaneous halting of the rotation of shaft 51, and therewith of suction cylinder 50, and will maintain the suction cylinder at rest during the time period required for nub 116a to clear the free end of lever arm 117a. During this period the flying knife 104 will undergo actuation into shearing coordination with a series of stationary shear blades 101, and will accomplish severing of individual sheets from the carried ends of strips 85, see the position indicated at 122, Fig. 7, by dotted lines. Also, during this time the worm 71, rotating constantly, will travel axially, as described above, on the now rigidly stationary gear 65. The notches of notched wheel 121 are so related to the position of slots 100 on the circumferential surface of suction cylinder 50 that, upon engagement of the toothed end of the pawl 119 with a notch, an individual series of stationary shear blades 101 will be disposed in shearing alignment with the flying attack of flying blade 104.

The master cam shaft 72 is driven directly from main drive shaft 23 and serves to control and correlate the timing of the several distinct operations of machine mechanism C. Thus, correlation of its distinct operations, one with another, and with the operations of the machine mechanisms of A and B may be had by the proper design and setting of the various sets of cams mounted on the master cam shaft 72.

Given the required correlation between the operations of the mechanisms A, B and C, all controlled by the main drive shaft 23 at a velocity substantially synchronized with the velocity of travel of the web 10, the leading edges of individual sheets 85—1 of each successive transverse sets of sheets will be carried into the zone of application Y—Y, and will contact the leading edges of the adhesively coated margins of perforations 25a of each successive set of the perforations. Thereafter, as the suction cylinder rotates, the remaining trailing portions of the individual sheets 85—1 are progressively brought into contact with the remaining portions of the adhesively coated margins of the perforations as the sheets travel through the zone of application. Release of the suction hold of the cylin-

der on the sheets occurs as the sheets pass through the zone of application Y—Y.

It should be noted that as the sheets 85—1 travel through the zone of application Y—Y, the positive suction hold of the cylinder thereon is released. However there is sufficient vacuum left in the particular bore 53 concerned (because of the almost sealed relation of the ends of the suction cylinder with the stationary shoes 55 and 56) to maintain the sheets in place on their carrier until picked up by the traveling web.

The traveling web 10 is maintained in receptive status in the zone of application Y—Y by means of pressure roller 123. The latter rotates in the direction of travel of the web and of the suction cylinder, being actuated by gear 124 meshing with gear 125 mounted on shaft 51. A final pressure treatment is given the affixed sheets 85—1 as the traveling web 10 passes through the pressure rollers 126 and 127. The final product appears as in Fig. 3, with the individual sheets 85—1 forming the windows of the carton blanks 10*a*.

The period of rest of suction cylinder 50 between the intermediate periods of motion are so regulated that the web 10 will travel the lengthwise distance between the sets of perforations 25*a* during such period of rest. It will be understood that the travel of the web 10 may be effected by means of conventional feed rollers, such, for example, as the rollers 126 and 127, which may be driven continuously and at uniform speed from the main drive shaft 23.

Whereas the method of this invention has been set forth according to a preferred practice thereof, and the apparatus has been illustrated and described with respect to this particular practice of the method, it should be clearly understood that many changes may be made in each without departing from the spirit and scope of the invention as defined herein and generalized in the following claims.

I claim:

1. A method of applying a series of individual flexible sheets of one material to a foundation material as the latter travels, which comprises feeding the foundation material; feeding a strip of flexible sheet material to a carrier while moving the carrier progressively but intermittently and directly into a pick-up surface of the foundation material; positively holding the fed portion of the said strip on the carrier; successively severing individual sheets from the so fed and held portion of the said strip at periods respectively coincident with the intermittent periods between said moving of the carrier, while holding the so severed individual sheets on the carrier; and completely releasing the positive holding of the individual sheets on the carrier as the leading edges of said sheets are fed into the leading edges of the pick-up surface of the foundation material.

2. A method of applying a series of individual flexible sheets to a web as the web travels, which comprises feeding the web; feeding a strip of flexible sheet material to a cylindrical carrier while intermittently rotating the carrier tangentially relative to a pick-up surface of the traveling web; positively holding the fed portion of the said strip on the cylindrical carrier as the latter rotates; successively severing individual sheets from the so fed and held portion of the said strip at periods respectively coincident with the intermittent periods between said rotation of said carrier, while holding the so severed individual sheets on said carrier; and completely releasing the positive holding of the individual sheets on said carrier as the leading edges of said sheets are fed successively into the leading edge of the pick-up surface of the web.

3. In apparatus for applying a series of flexible sheets to pick-up portion of a web as the web travels, means for feeding the web, a substantially cylindrical carrier, means for feeding strip flexible sheet material to said carrier, positive holding means for retaining the fed portion of said strip material on said carrier, means for moving said carrier progressively and intermittently into adjacency to a web so that the portion of the said strip material retained on said carrier progressively contacts the pick-up surface of said web with a rolling contact, severing means operative on the portion of the said strip material retained on said carrier, control mechanism for actuating said severing means in correlation with the intermittent movement of said carrier, and means for completely releasing the positive holding of said strip material on the carrier as the leading edge of said strip contacts the leading edge of the pick-up surface of the web.

4. Apparatus for operating upon a web as the web travels, comprising means for feeding the web; means for successively perforating the web as the web travels; means for coating the margins of the perforations with an adhesive as the web travels; carrier means; means for feeding strip flexible sheet material to said carrier means; positive holding means for retaining the fed portion of said strip material on said carrier means; means for moving said carrier means progressively and intermittently into adjacency to a web so that the portion of the said strip material retained on said carrier means progressively contacts the pick-up surface of said web; severing means operative on the portion of the said strip material retained on the said carrier means; control mechanism for actuating said severing means in correlation with the intermittent movement of said carrier means; means for completely releasing the positive holding of said strip material on the carrier as the leading edge of said strip material contacts the leading edge of the pick-up surface of the web; and common means for actuating the stated series of means in correlated timed sequence with respect to the speed of travel of the web.

5. A method of applying a series of individual flexible sheets of one material to a foundation material as the latter travels, which comprises feeding the foundation material; feeding a strip of flexible sheet material to a carrier while moving the carrier progressively but intermittently into a pick-up surface of the foundation material; positively holding the fed portion of said strip on the carrier by means of suction; successively severing individual sheets from the so-fed and held portion of said strip while the carrier is stationary, and while holding the so-severed sheets on the carrier; and completely releasing the positive hold of the individual sheets on the carrier as the leading edges of said sheets are fed into the leading edge of the pick-up surface, while continuing to maintain said sheets in place on the carrier until completely attached to the pick-up surface.

6. In apparatus for applying flexible sheets to a pick-up portion of a web as the latter travels, a carrier, means for moving said carrier intermittently at a surface speed substantially the

same as the speed of travel of the web, a reel for supplying a web of flexible sheet material to said carrier, means for retaining a portion of the web of flexible material on the carrier, severing means operative while said carrier is at rest to sever a portion of the web of flexible material retained on the carrier, means for taking up slack in said web of flexible material, and means for positively controlling the operation of said last mentioned means.

7. In apparatus for applying flexible sheets to a pick-up portion of a web as the latter travels, a carrier; means for moving said carrier intermittently at a surface speed substantially the same as the speed of travel of the web; a freely rotatable reel for holding a supply of flexible sheet material; means for pulling the flexible sheet material from said reel and feeding it to said carrier; and severing means operative while said carrier is at rest to sever a portion of the web of flexible material retained on the carrier, said pulling means including means for taking up slack while the carrier is at rest and means for preventing acceleration of the reels after severing.

8. Apparatus for operating upon a web as the web travels, comprising means for successively perforating the traveling web; means for applying adhesive to the margins of the perforations; a substantially cylindrical carrier means which is adapted to operate in correlation with the web movement for applying patches of flexible sheet material thereto; a reel for supplying a web of flexible material to said carrier; means for retaining a portion of the web of flexible material on said carrier; severing means cooperating with said carrier for severing a portion of the web of flexible material retained on the carrier for forming the patches to be applied to said web; means for taking up slack in said web of flexible material; and means for positively controlling the operation of said last mentioned means.

9. In apparatus of the character described, the combination of means for feeding a first material, means for applying adhesive to predetermined portions of said first material, cylindrical carrier means adapted to operate in correlation with said first material for applying patches of a second material thereto, a reel for said second material for supplying a web of said second material to said cylindrical carrier, means for retaining a portion of the web of said second material on said carrier, severing means cooperating with said carrier for severing a portion of the web of said second material retained on the carrier for forming the patches to be applied to said first material, means for taking up slack in the web of said second material, and means for positively controlling the operation of said last mentioned means.

10. In apparatus of the character described, the combination of means for feeding a first material, rotary carrier means adapted to operate in correlation with the first material feeding means for applying patches of a second material to the first material at predetermined intervals, means for paying out a web of said second material to said rotary carrier, means for retaining a portion of the web of the second material on said carrier, severing means cooperating with the carrier for severing a portion of the second material retained on the carrier to form successive patches from the leading end of the web, means for forming a loop in the web of said second material between the reel and the carrier, and mechanism connected to said loop forming means for moving the loop forming means first in a direction to yield up looped web material to the carrier and then moving the loop forming means positively in the opposite direction.

11. In a patch-applying apparatus, in combination, means for advancing a first material to be patched, a suction patch-applying cylinder for rolling successive patches into contact with predetermined areas of said first material as the first material is advanced, rotary means for paying out a web of patch material to the suction cylinder, means cooperative with the suction cylinder for periodically causing the leading end of the patch web to be jerked forward with the suction cylinder at the speed of said first material, loop-forming means acting on the web of patch material between the suction cylinder and the web paying out means, and cam mechanism operated in timed relation with the advance of the suction cylinder for causing said loop-forming means freely to yield up looped material to the suction cylinder each time the web is jerked forward and to effect a controlled reestablishment of the loop in the intervals between the jerks of the web.

12. In a patch-applying apparatus, in combination, means for advancing a first material to be patched, a suction patch-applying cylinder for rolling successive patches into contact with predetermined areas of said first material as the first material is advanced, rotary means for paying out a web of patch material to the suction cylinder, means cooperative with the suction cylinder to sever successive patches from the leading end of the web, means cooperative with the suction cylinder for periodically causing the leading end of the patch web to be jerked forward with the suction cylinder at the speed of said first material, loop-forming means acting on the web of patch material between the suction cylinder and the web paying out means, and cam mechanism operated in timed relation with the advance of the suction cylinder for causing said loop-forming means freely to yield up looped material to the suction cylinder each time the web is jerked forward and to effect a controlled reestablishment of the loop in the intervals between the jerks of the web.

13. In a patch-applying apparatus, in combination, means for advancing a first material to be patched, a rotary patch-applying cylinder for directly rolling successive patches into contact with predetermined areas of the first material during the advance of the latter, rotary means for paying out a web of patch material to the patch-applying cylinder, means cooperative with the cylinder to sever patches from the web, suction means embodied in and cooperative with the cylinder and including a multiplicity of suction passages distributed around the periphery of said cylinder for holding an extensive length at the leading end of the web in contact with the cylinder at all times and for also holding a severed patch to the cylinder to cause it to be carried forward by the cylinder into contact with the first material, and means for breaking the suction hold of the cylinder upon the patch substantially at the point of patch application.

14. In a patch-applying apparatus, in combination, means for advancing a first material to be patched, means for applying adhesive to predetermined areas of said first material, a rotary patch-applying cylinder for directly rolling successive patches into contact with said areas of

the first material during the advance of the latter, rotary means for paying out a web of patch material to the patch-applying cylinder, means cooperative with the cylinder to sever patches from the web, suction means embodied in and cooperative with the cylinder and including a multiplicity of suction passages distributed around the periphery of said cylinder for holding an extensive length at the leading end of the web in contact with the cylinder at all times and for also holding a previously severed patch to the cylinder to cause it to be carried forward by the cylinder into contact with the first material, and means for breaking the suction hold of the cylinder upon the patch substantially at the point of patch application.

15. In a patch-applying apparatus, in combination, means for advancing a first material to be patched, a rotary patch-applying cylinder for directly rolling successive patches into contact with predetermined areas of the first material during the advance of the latter, rotary means for paying out a web of patch material to the patch-applying cylinder, means cooperative with the cylinder to sever patches from the web, suction means embodied in and cooperative with the cylinder for holding an extensive length at the leading end of the web in contact with the cylinder at all times and for also holding a severed patch to the cylinder to cause it to be carried forward by the cylinder into contact with the first material, said suction means including a source of suction, a multiplicity of longitudinally extending rows of suction passages in the face of the cylinder for causing each patch to be held to the cylinder after severance by a plurality of rows of suction passages as it is carried forward by the cylinder, a plurality of longitudinally extending suction manifold passages in the cylinder, each in constant communication with a plurality of adjacent rows of the suction passages, and means for causing suction to be applied to each manifold passage at one predetermined point in the rotation of the cylinder and for causing suction to be destroyed in each manifold at another predetermined point substantially as the leading row of suction passages with which it communicates reaches the point of patch application.

16. In a patch-applying apparatus, in combination, means for advancing a first material to be patched, a rotary patch-applying cylinder for directly rolling successive patches into contact with predetermined areas of the first material during the advance of the latter, rotary means for paying out a web of patch material to the patch-applying cylinder, means cooperative with the cylinder to sever patches from the web, and suction means embodied in and cooperative with the cylinder for continuously holding the leading end of the web in contact with the cylinder at all times and for also holding a severed patch to the cylinder to cause the patch to be carried forward with the cylinder into contact with the first material after severance, said suction means including a source of suction, a multiplicity of longitudinally extending rows of suction passages in the face of the cylinder for causing each patch to be held to the cylinder after severance by a plurality of the rows of suction passages as it is carried forward by the cylinder, a plurality of longitudinally extending suction manifold passages in the cylinder, each in constant communication with a plurality of adjacent rows of the suction passages, and means for causing suction to be applied to each manifold passage at one predetermined point in the rotation of the cylinder and for causing the suction to be destroyed in each manifold at another predetermined point substantially as the leading row of suction passages with which it communicates reaches the point of patch application.

17. In a patch-applying apparatus, means for advancing a material to be patched, a rotary patch-applying cylinder for directly rolling patches into engagement with predetermined areas of the material to be patched at a predetermined patch-applying point in the rotation of the cylinder, rotary means for paying out a web of patch material to the patch-applying cylinder, said cylinder including patch-cutting members disposed at intervals about the periphery of the cylinder, severing means cooperative with the patch-cutting members on the cylinder for severing successive patches at a predetermined patch-cutting point, a source of suction, said cylinder having a multiplicity of groups of rows of suction passages disposed about the periphery thereof, and means for causing suction to be applied to each group of rows of suction passages in advance of the severing point and for causing the suction to be destroyed in all the rows of a group simultaneously substantially as the leading row of a group reaches the patch-applying point.

18. In a patch-applying apparatus, in combination, means for continuously advancing at constant speed a first material to be patched, a rotary patch-applying cylinder for directly rolling successive patches into contact with predetermined areas of the first material during the advance of the latter, rotary means for paying out a web of patch material to the patch-applying cylinder, means cooperative with the cylinder to sever patches from the web, suction means embodied in and cooperative with the cylinder and including a multiplicity of suction passages distributed around the periphery of said cylinder for holding an extensive length at the leading end of the web in contact with the cylinder at all times and for also holding a severed patch to the cylinder to cause it to be carried forward by the cylinder into contact with the first material, and means for breaking the suction hold of the cylinder upon the patch substantially at the point of patch application.

19. A patch-applying mechanism comprising, in combination, means for advancing a first material, a drum directly cooperative therewith to progressively press a patch of a second material into adhesive union with the first material as the first material advances, rotary means for paying out a web of patch material to the drum, means for intermittently rotating the drum, means cooperative with the drum to sever successive end portions of the web during successive rest periods of the drum, and suction means including a plurality of longitudinally extending rows of suction holes in the drum for holding each severed patch to the drum, said suction means serving also to hold the unsevered web end of the second material to the drum at all times.

20. A patch-applying mechanism comprising, in combination, means for continuously advancing at constant speed a first material to be patched, a drum directly cooperative therewith to progressively press a patch into adhesive union with the first material as the first material advances, rotary means for paying out a web of patch material to the drum, positive means for

alternately advancing and arresting the drum to feed it through steps of predetermined length, means cooperative with the drum to sever successive end portions of the web during successive rest periods of the drum, and suction means including a plurality of longitudinally extending rows of suction holes in the drum for holding each severed patch to the drum, said suction means serving also to hold the unsevered web end of the patch material to the drum at all times.

WILLIAM F. GRUPE.