May 22, 1934. S. L. McFADIN 1,959,379

ELECTRICAL CONTROL SYSTEM

Filed Sept. 3, 1929 5 Sheets-Sheet 1

FIG. 1

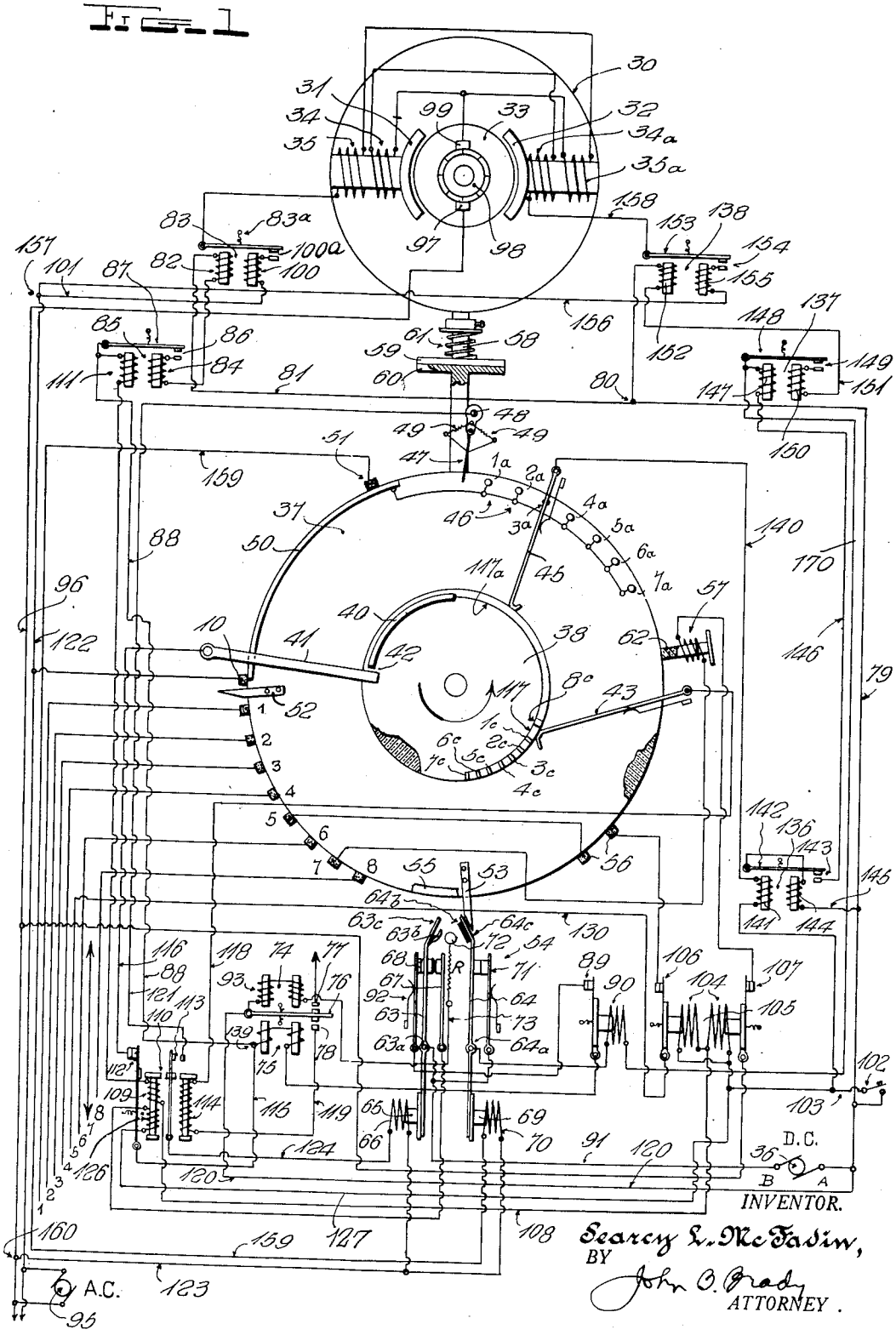

May 22, 1934. S. L. McFADIN 1,959,379

ELECTRICAL CONTROL SYSTEM

Filed Sept. 3, 1929 5 Sheets-Sheet 2

FIG. 2

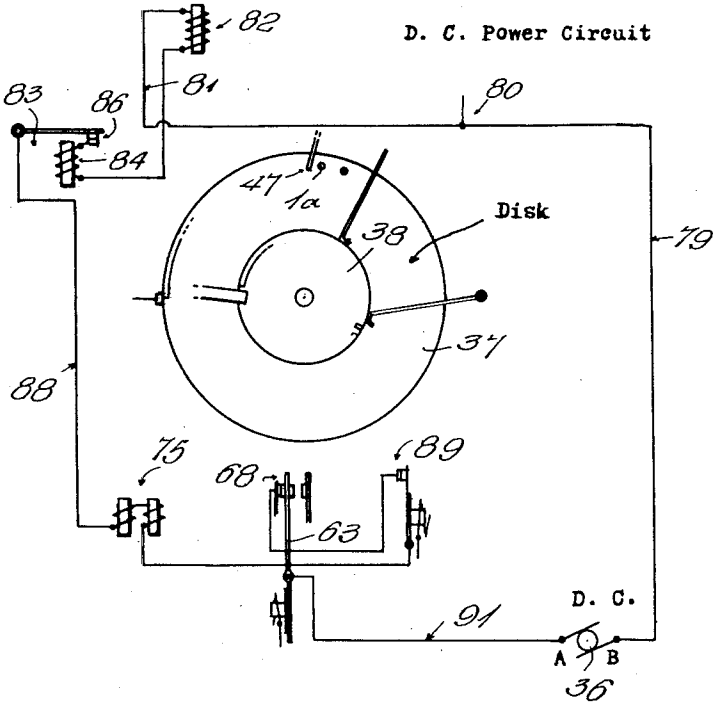

FIG. 3

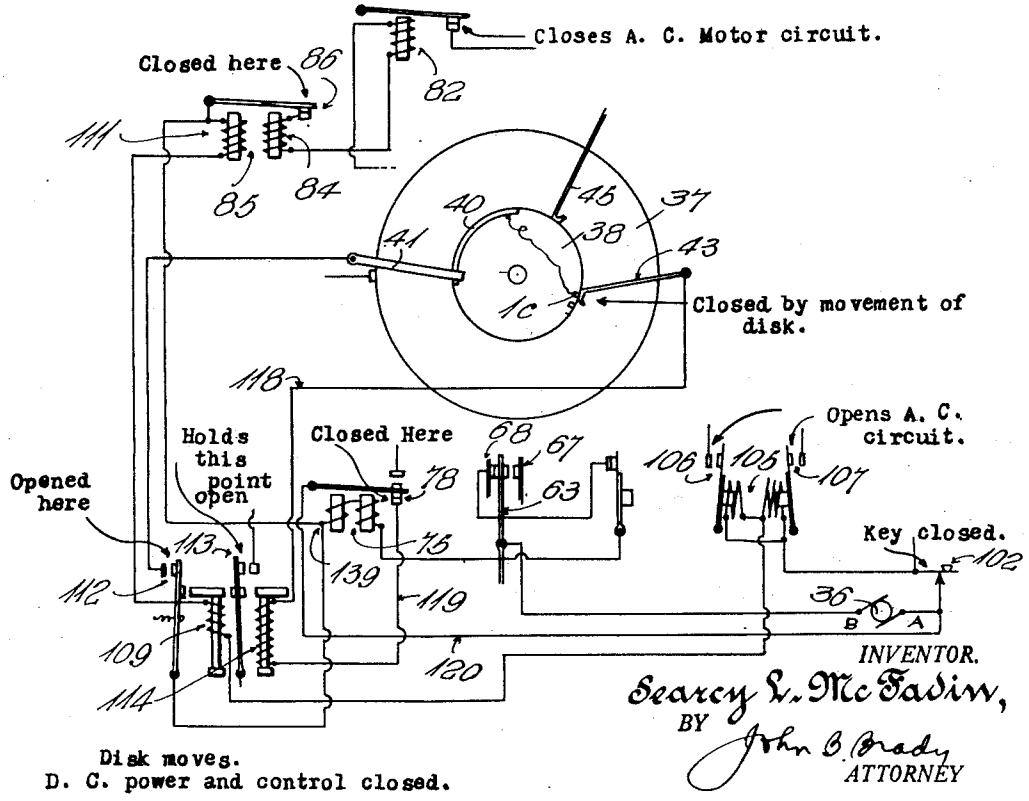

INVENTOR.
Searcy L. McFadin,
BY
John B. Brady
ATTORNEY

May 22, 1934. S. L. McFADIN 1,959,379

ELECTRICAL CONTROL SYSTEM

Filed Sept. 3, 1929 5 Sheets-Sheet 3

FIG. 4

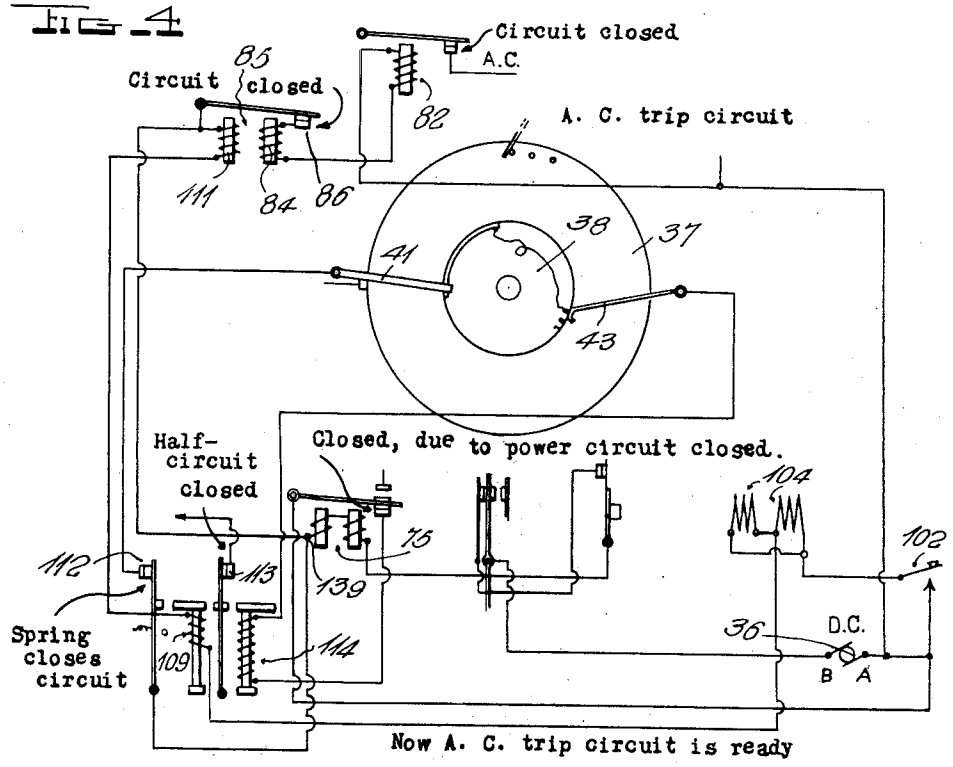

FIG. 5

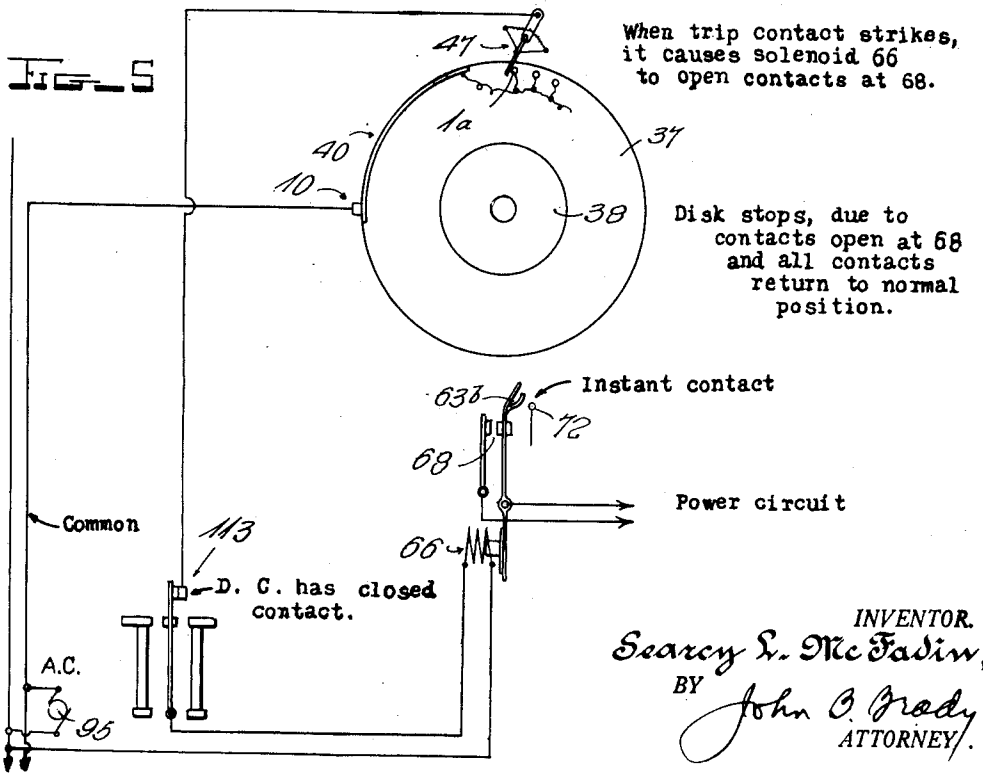

INVENTOR.
Searcy L. McFadin,
BY
John O. Brady
ATTORNEY.

May 22, 1934. S. L. McFADIN 1,959,379

ELECTRICAL CONTROL SYSTEM

Filed Sept. 3, 1929 5 Sheets-Sheet 4

Fig. 6

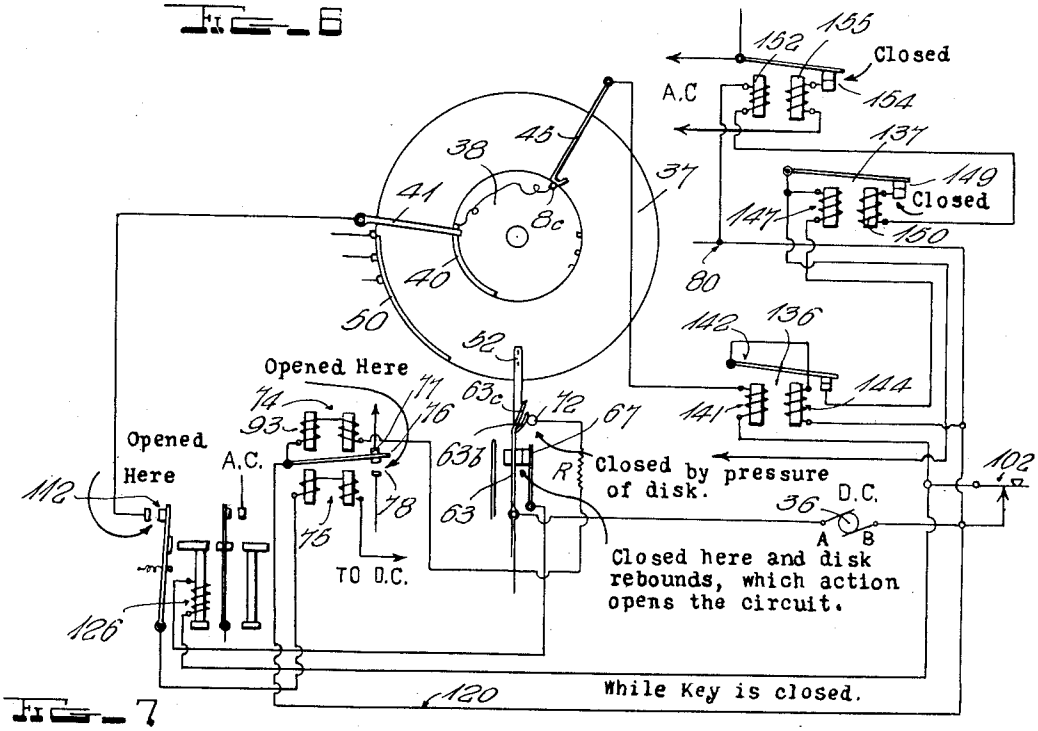

Fig. 7

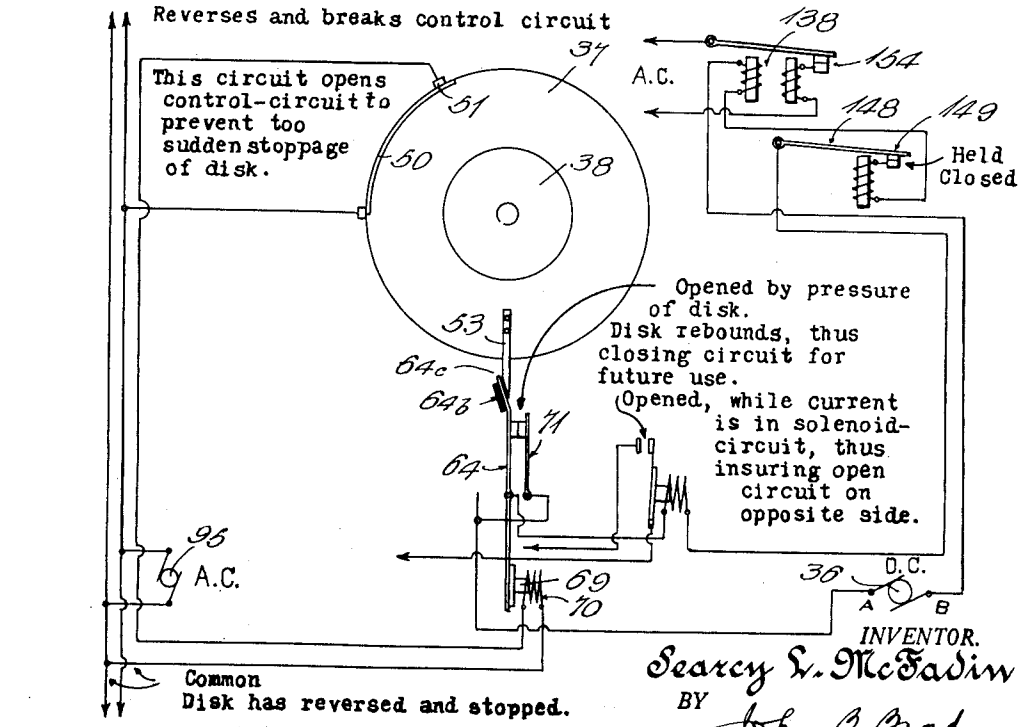

INVENTOR.
Searcy L. McFadin
BY
John B. Brady
ATTORNEY.

May 22, 1934. S. L. McFADIN 1,959,379

ELECTRICAL CONTROL SYSTEM

Filed Sept. 3, 1929 5 Sheets-Sheet 5

FIG. 8

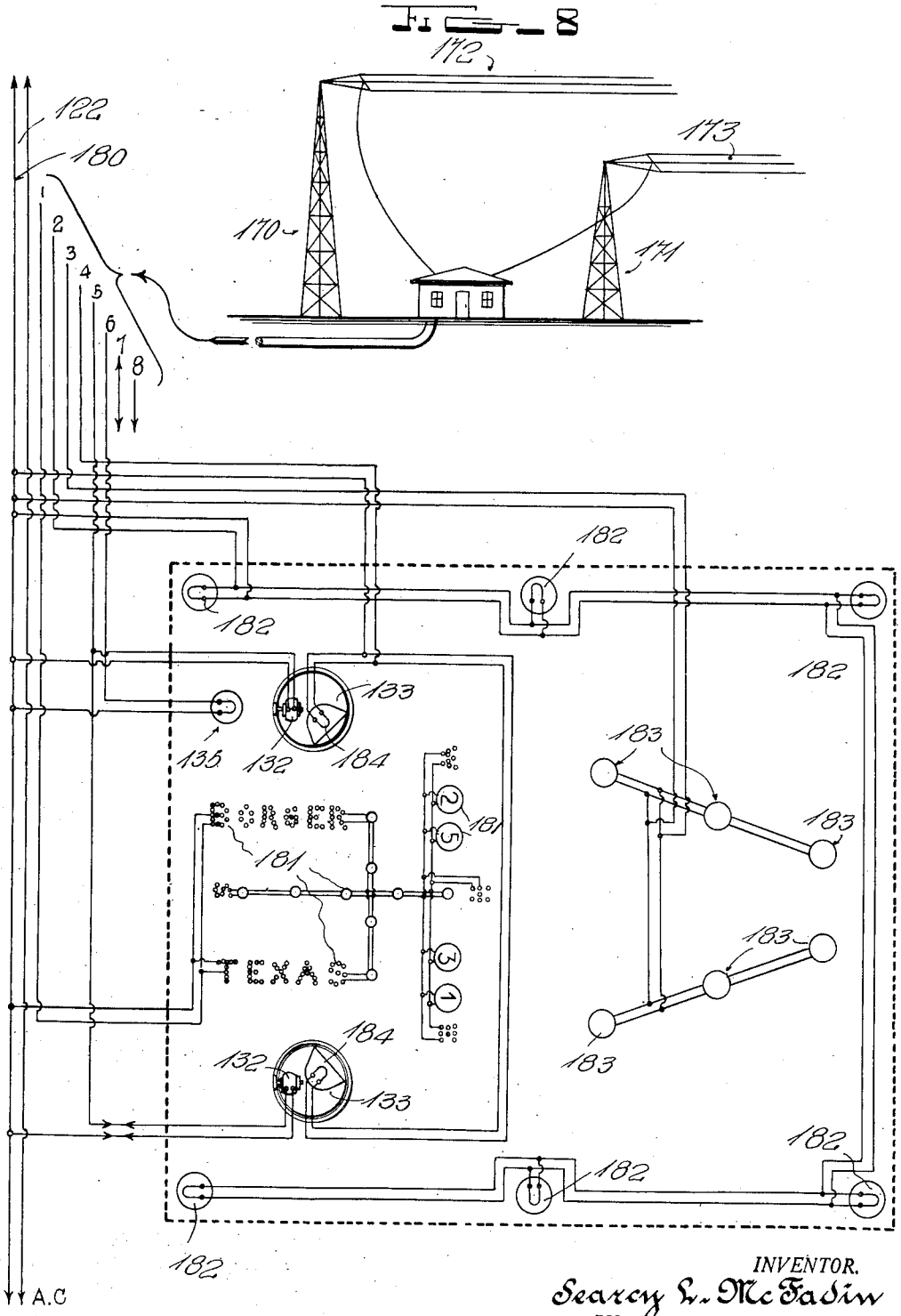

INVENTOR.
Searcy L. McFadin
BY John O. Grady
ATTORNEY.

Patented May 22, 1934 1,959,379

UNITED STATES PATENT OFFICE

1,959,379

ELECTRICAL CONTROL SYSTEM

Searcy L. McFadin, Borger, Tex., assignor to Edward W. Hines, trustee, Cordell, Okla.

Application September 3, 1929, Serial No. 390,147

3 Claims. (Cl. 175—375)

My invention relates broadly to control apparatus and more particularly to an apparatus for the control of electrical circuits at distant points by electrical energy.

One of the objects of my invention is to provide an electrical control apparatus, whereby a multiplicity of separate circuits may be selectively controlled in step-by-step operations, the control apparatus being brought to a selected position depending upon the character of the control signals.

Another object of my invention is to provide a construction of circuit selecting apparatus which may be controlled by signals transmitted from a distance for closing predetermined circuits successively in step-by-step order and restoring all of the circuits substantially simultaneously to their original condition.

Still another object of my invention is to provide a construction of control apparatus having a rotary actuator which may be rotated through predetermined angular distances to shift a plurality of disc members into selected positions for closing electrical circuits upon the receipt of predetermined control signals.

A further object of my invention is to provide a construction of control apparatus in which a reversible motor may be actuated by a control signal to rotate a contact carrying disc to selected positions for closing a multiplicity of control circuits upon receipt of particular predetermined control signals.

A still further object of my invention is to provide a construction of control apparatus employing relay devices for actuating a control upon receipt of a control signal with minimum inertia, the relays functioning under the combined influence of direct and alternating current utilized in the control system.

Other and further objects of my invention reside in the construction of control apparatus and circuit arrangement as more fully hereinafter described and as illustrated in the accompanying drawings, in which:

Figure 1 diagrammatically illustrates the control apparatus embodying the principles of my invention; Fig. 2 is a simplified wiring diagram showing the direct current power circuit employed in the system of my invention; Fig. 3 illustrates the direct current power and control circuit in closed position; Fig. 4 illustrates the condition of the circuits in the next succeeding step after the position illustrated in Fig. 3; Fig. 5 illustrates the circuit which is employed to positively open the contacts of the main control relay in the power circuit; Fig. 6 illustrates the positive means employed to close the reverse circuit though the power control relay at the end of the path of travel of the contact device in the selector apparatus; Fig. 7 shows the position of the control relays when the selector disc has returned to its initial position after reverse movement from the position shown in Fig. 6; and Fig. 8 illustrates one system of circuits on the landing field of an aircraft system, which circuits are selectively controlled by the apparatus illustrated in Figs. 1 and 7.

The control apparatus of my invention may be actuated by signals transmitted from aircraft approaching a landing field to selectively close circuits on the landing field for indicating to the approaching aircraft the safety limits for the landing of the aircraft and otherwise denote the character and geographical location of the landing field. While the control apparatus of my invention is adapted for actuation by signals transmitted by radiant energy the control circuits may be actuated by signals transmitted by line wire in other systems of control. In describing my invention in connection with a remote control system of radio transmission I do not intend to limit my invention to radiant energy control, and it is desired that it be understood that the control system of my invention may be actuated either by line wire or by radio for performing the functions of successively closing electrical circuits in predetermined order and thereafter restoring the circuits to their original condition preparatory to the reception of a further series of control impulses.

When the apparatus of my invention is used as a responsive system to radio signaling energy I locate the apparatus on a control panel which is mounted with respect to the control apparatus in such manner that access may be had to the several relays and parts of the equipment for adjustment and repair and replacement of parts. The control apparatus may be located in the radio receiving station adjacent the landing field of an aircraft landing station.

I have illustrated in Fig. 8 one arrangement of the control system in which the receiving apparatus is located adjacent the aircraft landing field and control signals received from aircraft on the radio antennæ illustrated for the operation of a relay system at the receiver and the actuation of the control apparatus of my invention for successively opening or closing the circuits to the aircraft landing field.

The control panel of my invention shown in

Fig. 1 includes an automatic switching mechanism which is driven under control of an alternating current motor. I have represented the several parts of the apparatus on the control panel diagrammatically including the reversible series connected motor 30 having opposed poles 31 and 32 on opposite sides of rotatable armature 33. The opposed poles are wound with separate windings which I have designated at 34, 34*a*, 35 and 35*a*. The windings are independently energized to effect rotation of the motor in different directions. The means which I provide for controlling the direction of rotation of the motor will be described in detail. A suitable source of direct current energy is utilized at the receiving station, such as the lighting circuit direct current supply or a storage battery source of 6 to 12 volts.

In order to render the system of my invention permanent in its character, I prefer to employ a direct current lighting circuit, although I may employ any suitable storage battery source, such as a gas engine driven generator, with floating battery system connected thereto for supplying the motor of the control apparatus of my invention. I have indicated the direct current source by reference character 36. The motor 30 has its shaft suitably geared to revolve a turntable that I have indicated at 37, which turntable carries a multiplicity of contact members which will be more fully described hereinafter. I have indicated the connecting shaft generally at 58 including clutch members 59 and 60 suitably spring pressed at 61 so that motor 30 may revolve disc 37 to a point where an obstruction is reached by engagement of the protruding members on the disc 37 with a switch located adjacent the disc, as will be more fully hereinafter described. At the time of abutment between the members carried by disc 37 with the switch adjacent disc 37 there will be sufficient slippage between the motor drive shaft and the drive to the disc 37 as will prevent any injury to the parts of the driving mechanism.

The central portion of the turntable 37 is shown at 38 carrying a multiplicity of contacts spaced one from the other disposed at 1*c*, 2*c*, 3*c*, 4*c*, 5*c*, 6*c* and 7*c* adjacent the peripheral edge of the disc 38. Adjacent the opposite peripheral edge of the disc 38 I provide a continuous contact strip 40 over which brush member 41 may sweep. In the normal position of the disc 38 brush 41 is out of contact with strip 40, as will be noted from the gap 42 between the end of strip 40 and brush members 41. The contact members 1*c*, 2*c*, 3*c*, 4*c*, 5*c*, 6*c* and 7*c* are so spaced from each other that brush 43 successively contacts with each of the contact members 1*c*, 2*c*, 3*c*, 4*c*, 5*c*, 6*c* and 7*c* and passes over insulation material on the peripheral edge of disc 38 intermediate each of the contacts 1*c*, 2*c*, 3*c*, 4*c*, 5*c*, 6*c* and 7*c*. The contact members are electrically connected as shown, and connected with the additional contact member 8*c* through wire 117 and connected to the continuous contact strip 40 through wire 117*a*, which is arranged to establish wiping contact with brush member 45 at the time that brush member 43 is clear of the last contact 7*c* of the set of contact members 1*c*, 2*c*, 3*c*, 4*c*, 5*c*, 6*c* and 7*c* on member 38. The disc 37 carries a multiplicity of contacts adjacent the peripheral edges thereof which I have shown at 1*a*, 2*a*, 3*a*, 4*a*, 5*a*, 6*a* and 7*a*. The contacts 46 are spaced one from the other adjacent the peripheral edge of disc member 38 to allow successive contact to be made with brush member 47 as the disc is moved by motor 30. The brush member 47 is pivoted at 48 and is spring pressed on each side thereof as represented at 49 for insuring a quick snap action as the brush 47 wipes each contact 46 successively. The sets of contacts 1*a*–7*a* and 1*c*–8*a* are arranged in separate control circuits for completing selected circuits under step by step movement of the switching apparatus.

The contact members 46 are electrically connected in parallel and are connected to the strip 50. The disc 37 carries strip member 50 adjacent the peripheral edge thereof, as shown, which strip may establish contact with a multiplicity of separate brushes which I have designated at 1, 2, 3, 4, 5, 6, 7 and 8 in addition to a common brush shown at 10. I have shown eight brushes. This number may be varied in accordance with the number of circuits which are to be controlled by the system of my invention. I provide an independent brush 51 in sliding engagement with continuous strip 50 for the control of the motor circuit, as will be described hereinafter.

The rotary disc 37 also carries a mechanical breaker 52, which is disposed at an acute angle with respect to the line of the opposite mechanical breaker which I have shown at 53. These mechanical breakers 52 and 53 serve to actuate a switch device which I have designated generally at 54 mounted on the panel adjacent the rotary disc. The rotary disc 37 also carries a bridging strip 55 which is adapted to shunt a pair of brushes designated at 56 when the disc 37 moves to a position where contact strip 55 bridges the brushes 56.

In order to provide for the braking of the motor 37, I provide a solenoid 57 which operates a brake shoe 62 engaging the peripheral edge of disc 37 for bringing the disc 37 to a stop immediately upon the completion of the circuit which connects to solenoid 57. The switch device 54 comprises two independent sections, one section of which includes the movable tongue 63 and the other section of which includes the movable tongue 64. Tongue 63 is pivotally mounted at 63*a* and extends rearwardly from the pivoted mounting to a position where it connects with the moving member 65 of a solenoid 66 by which the tongue 63 may be moved into contact with the contact strip 67 and away from contact strip 68. The tongue 64 is pivotally mounted at 64*a* and has a rearward extension 69 thereon by which tongue 64 may be moved under control of solenoid 70 out of contact with contact strip 71. The central member 72 is permanently anchored to the control panel and is electrically connected through lead 73 with magnet windings 74, as will be more fully described hereinafter. The member 72 forms a mechanical stop for each of the tongues 63 and 64. I provide a contact spring 63*b* on tongue 63, which may establish electrical connection with stop 72 while an insulation member 64*b* is carried by tongue 64, which prevents connection between tongue 64 and stop 72. Each of the tongues 63 and 64 have extensions 63*c* and 64*c* thereon by which the tongues may be moved by abutment of mechanical breakers 52 and 53 with the protruding portions 63*c* and 64*c* of tongues 63 and 64.

I provide a relay 93 having relay windings 74, the relay being of the double action type, in which opposed windings 75 are provided with a moving armature 76 disposed therebetween with sets of contacts 77 and 78 disposed on opposite sides thereof. When windings 74 are energized

armature 76 will be drawn upwardly, and when windings 75 are energized armature 76 will be drawn downwardly closing the circuit between armature 76 and contact 78. The direct current supply circuit extends from the source 36 through conductor 79 to the midway point 80. In the condition of the circuit as illustrated the direct current passes along conductor 81 through electromagnet 82 of relay 83, thence through relay winding 84 of relay 85 to contact 86 which may complete connection with a contact carried by armature 87 to complete the direct current circuit through conductor 88, windings 75 and moving armature, and contact system 89 of relay 90, thence to tongue 68 and tongue 63 of switch 64 to conductor 91, returning to the direct current source 36. The tongue 63 is normally in contact with tongue 68 by virtue of the leaf spring assembly shown at 92. The direct current circuit as traced is ineffective until the tongues of several relays 83, 85 and 93 are actuated.

The alternating current supply circuit receives energy from a source designated at 95 and energy is carried over conductor 96 to the brush 97 of the driving motor 30, thence through the armature winding 98 to brush 99, and through the field windings 35*a* and 35 to the moving armature of relay 83 winding 100 to conductor 101, which is the opposite side of the alternating current supply circuit when the contacts of the relay 83 are closed. The solenoid winding 100 is so proportioned with respect to solenoid winding 82 that by the combined electromagnetic effects of these windings the armature of the relay 83 is maintained in closed position even under conditions of shock vibration to which the apparatus may be subjected, but upon failure of current in either winding 82 or winding 100 after the initial closing of the circuit through contacts 100*a*, armature 83 is drawn away from the stationary contact of the relay by the action of spring 83*a*.

It will be noted that in supplying the alternating current energy to the motor circuit the relay 83 is not self-actuating. That is, the contacts between the moving armature and the stationary contact of relay 83 are normally open and the relay must be preconditioned. Until solenoid 82 is energized by direct current, the alternating current will not be supplied to the motor circuit. Relay 83 serves as a circuit breaker, for when the relay is closed, the alternating current passing through solenoid winding 100 aids and assists in maintaining the relay contacts closed, but upon failure of direct current in winding 82, the relay opens under action of spring 83*a*. In order that the circuit to the motor may be closed, a signal must be impressed upon the control through relay contacts which are controlled by the keying circuit 102. The energy, which is made effective upon the receipt of a signal, or upon the operation of a keying circuit at the position shown at 102, is conveyed through conductor 103 and through winding 104 of the double acting solenoid relay 105 having sets of opposed contacts 106 and 107 which connect in the alternating current circuits, which will be hereinafter described. The signaling control circuit continues through conductor 108 through winding 109 of the relay system 110 and then through winding 111 of relay 85. The opposite end of the solenoid winding 111 connects to armature 87 which is in common with the conductor 88 of the direct current circuit, which conductor is utilized to lead the signal control circuit to the side B of direct current source 36. The return circuit may be traced through conductor 88, winding 75, relay contacts 89, tongues 68 and 63 of switch 64 and conductor 91 to the B terminal of the direct current source 36. The A terminal of direct current source 36 connects to the opposite side of signal control circuit 102. Upon energizing solenoid 111 the armature 87 of relay 85 is drawn downwardly to close contact 86, effectively energizing solenoid 84 in the direct current circuit and energizing relay winding 82 of relay 83, thereby closing the alternating current circuit to the motor 30 and causing the motor to revolve and correspondingly rotate discs 37 and 38.

The effect of energizing winding 109 of relay 110 is the opening of contacts 112 and the separation of contacts 113, thereby preventing closing of contacts 113 even though solenoid 114 may be energized. Contacts 113 are normally maintained in open position and when solenoid 109 is energized these contacts are so widely separated that energization of solenoid 114 at that time will not be effective to close contacts 113. It follows that solenoid 109 must be deenergized before contacts 113 can be closed under the influence of solenoid 114. This arrangement of relay contacts has been found to be a feature of safety to prevent interference with the controls at undesired time periods. The circuit through contacts 112 extends from conductor 115 which is connected to the side B of the direct current source 36 through the circuit including relay windings 75, relay contacts 89 and tongues 68 and 63 of switch 64. The circuit through contacts 112 extends through conductor 116 to brush 41, whereby sliding connection is established with contact strip 40 as the discs 37 and 38 are advanced. The circuit extends from contact strip 40 through bridging conductor 117 on disc 38, which connects to the contact members 39. The circuit also extends through shunting conductor 117*a* to contact 40 carried by disc 38. The circuit is completed by wiping contact between contact members 1*c*, 2*c*, 3*c*, 4*c*, 5*c*, 6*c* and 7*c*, etc., with brush 43, which connects through lead 118 to the solenoid winding 114 of relay 110. The circuit continues through conductor 119 to contact 78 of relay 93 and through tongue 76 to conductor 120 where it leads to the A terminal of the direct current source 36. The circuit just described is only completed when windings 75 are energized from the direct current source and at the time that contact strips 63 and 68 are closed with respect to each other and at the time that the relay contacts 89 are closed.

When the keying or relay control circuit 102 is closed and the discs 37 and 38 are being revolved contact 113 is held open, but upon releasing the keying or relay control circuit 102 solenoid 114 becomes effective, by virtue of the closed path from the source through winding 114, conductor 118, brush 43, selected ones of contact members 39, shunting conductor 117, strip 40, brush 41, conductor 116 and contacts 112 to the opposite side of the direct current source through conductor 115. Contacts 113 are thus closed creating a circuit through wire 121 to the brush 47, which establishes contact with a selected one of the contact members 46 on the disc 37, thus connecting through strip 50 and brush 10 to one side of the alternating current source 95 at line 122. The other side of the source 95 connects through line 123 through the winding of solenoid 66 and conductor 124 to the contacts 113, thus energizing solenoid 66 which moves armature 65

to a position which breaks the circuit between tongue 63 and tongue 68, thereby deenergizing electromagnet winding 84 of relay 85, releasing tongue 87, opening contacts 86, deenergizing electromagnetic winding 82 and opening the alternating current supply circuit to the motor 30, thereby bringing the motor to a stop. It will be observed that the several sets of contacts correspond on the several discs, that is contacts 1, 2, 3, 4, 5, 6, 7 and 8 correspond to the similarly numbered contacts having subscripts *a* and *c*. Corresponding circuits which are selected simultaneously with the selection of the circuit through contact 1 may also be traced through the circuits terminating at contacts 1*a* and 1*c*, as will be hereinafter described.

By timing the rotation of discs 37 and 38 contacts can be closed to the brushes 1, 2, 3, 4, 5, 6, 7 and 8 successively to control different circuits connected to these contacts, and depending upon the time period through which the motor 30 is operated the disc will advance to the different circuit positions and may be brought to rest at any selected circuit position if the control circuit is deenergized after the discs have advanced to the selected position. When the disc 37 has advanced to the full limit of rotation permitted by abutment of mechanical breaker 52 with the extension 63*b* of tongue 63, the circuit between tongue 63 and tongue 68 is broken and a circuit completed through spring member 63*b*, contact 72, through lead 73, through solenoid winding 74 and conductor 120, thus insuring a quick break of the direct current circuit to the motor control by the withdrawal of armature 76 from contact 78. The opening of the contact between armature 76 and contact 78 deenergizes solenoid winding 114, opening contacts 113, deenergizing solenoid winding 66.

When disc 37 advances to a position where contact member 55 reaches the brushes 56 a circuit is completed through contact member 5 through strip 50 and contact brush 10 to the side 122 of the alternating supply line. The alternating current passes from contact brush 56 through contacts 106 of relay 104 through the conductor 130 to the control lead numbered 5 which extends to the landing field and connects to driving motor 132 of the revolving beacons 133. So long as member 55 remains on contacts 56, motor 132 rotates and beacon lights 133 sweep the landing field. This action continues so long as the keying circuit 102 is open, for when the keying circuit 102 is closed solenoid 104 is energized and contacts 106 are opened thereby opening the circuit to the driving motor 132.

In order to bring the motor 132 to a stop in any given selected position the signaling circuit 102 is closed, thus moving disc 37 to a position where contact member 6 connects with strip 50. By reason of the advanced position of disc 37 contact strip 55 has moved past contact 56, and so the circuit to driving motor 132 is opened and this condition made apparent by an indicator lamp 135 connected to circuit 6 on the field which receives energy from the alternating current line 122 through brush 10, contact strip 50 and brush 6 to the indicator lamp 135, leading to the opposite side of the alternating current source. The disc 37 is next advanced another step by again closing the signaling circuit 102 by which the disc may be advanced a step to a position where strip 50 connects with brush 7 thereby energizing solenoid winding 57. The solenoid 57 projects a brake shoe 62 against the peripheral edge of disc 37, thereby reducing the rotative momentum of disc 37 preparatory to a reverse movement thereof. Contacts 107 of relay 105 are normally closed and are opened when the signaling circuit is closed so that the brake is ineffective when the signaling circuit is closed.

The mechanical movement of tongue 63 under control of breaker 52 is such that connection is established with tongue 67, which establishes a connection from the side B of the direct current source through conductor 125, through winding 126 of relay 110, returning through conductor 127 and conductor 103 to signal control circuit 102, returning to the A side of the direct current source 36. By energizing winding 126 contacts 112 are opened, thereby breaking the circuit from the direct current source through brush 41 contacts strip 40, the selected one of contact members 1*c*, 2*c*, 3*c*, 4*c*, 5*c*, 6*c*, 7*c* and 8*c*, brush 43, winding 114, lead 119 to contact 78, the tongue 76, back to the A side of the direct current source 36 through conductor 126. A brush 8 is provided for completing the circuit to the auxiliary equipment provided on the landing field.

In order to reverse the movement of the disc 37 the energy must be supplied to the driving motor 30 through field windings 34*a* and 34 in a different direction than supplied through field windings 35*a* and 35. This is accomplished by means of relay systems 136, 137 and 138, as will be described hereinafter. When the disc 37 has reached the limit of its counter-clockwise rotation connection is established between contact 8*c* and brush 45 by which energy is supplied from the side B of the direct current source 36 through contact member 40, brush 41, wire 116, contacts 112, lead 115 to bus 139 through winding 75, contacts 89, spring member 68, spring member 63, through wire 91 back to the B side of the direct current source 36. The direct current path thus established extends through conductor 140 and through winding 141 on relay 136, through conductor 103, returning to the signaling circuit 102. This results in the closing of armature 142, thus closing contact 143, which is maintained closed by the energization of the electromagnet 144, which obtains its energy from the circuit established through lead 145, generator 36, lead 146, winding 147, wire 170, the winding on relay 90, leaf spring 64 contact spring 71 to the line 91 to the B side of the direct current source 36. The other side of electromagnetic winding 144 connects through armature 142, contact 143, lead 146, electromagnetic winding 147 of relay 137, returning to the line 79, which connects to the A side of the direct current source 36. The reverse motor circuit is thereby established.

Electromagnetic winding 147 draws armature 148 to a position where contact 149 is closed, thereby closing a circuit through electromagnetic winding 150 and lead 151 through electromagnetic winding 152, returning to the point 80 on the line 79, thereby placing winding 150 across the direct current source 36 and maintaining the armature 148 closed with respect to contract 149. Electromagnetic windings 147 and 150 are so proportioned that their conjoint influence is necessary to maintain the armature 148 in closed position under conditions of shock vibration to which the apparatus may be subjected and any weakening of one winding with respect to the other is sufficient to open the contacts after the initial closing thereof as hereinbefore described. Energization of electromagnetic winding 152 is sufficient to attract armature 153, closing contact 154,

thereby completing the alternating current circuit through electromagnetic winding 155, and through line 156 to the point 157 on the side 122 of the alternating current supply line. The alternating current is thus supplied through line 158 to the field windings 34a and 34, returning through the brush 99, armature winding 98, brush 97, lead 96 and conductor 58 to the opposite side of the alternating current supply. The combined influence of electromagnetic windings 152 and 155 is required to maintain relay 153 in closed position under conditions of shock vibration to which the apparatus may be subjected, and upon failure of energy in the electromagnetic winding 152 after the initial settings of the armature in closed position armature 153 will be released and the circuit to the driving motor broken. The means which I provide for maintaining the relay contacts closed as hereinbefore described are for safety purposes for preventing opening of contacts even under conditions of shock vibration to which the control apparatus may be subjected. So long as the contact springs 64 and 71 remain closed the driving motor 30 operates in reverse rotation and carries the disc 37 in a clockwise direction, but when breaker 53 approaches the extension 64c on leaf spring 64 and abuts with such extension at 64c, the leaf springs 64 and 71 are spread, thus opening the contacts which deenergize the relays 136, 137 and 138, bringing the motor 30 to a stop. It will be observed that insulation strip 64c abuts contact member 72, limiting the movement of the disc 37 by the obstruction of breaker 53 with the extension 64c.

In order that every precaution may be taken to open the driving motor circuit 30 at this point contact strip 50 is arranged to establish connection with brush 51, which connects through lead 159 to the alternating current source from the line 122 and brush 10, thereby energizing line 159 through solenoid winding 70, returning through lead 123 to the opposite side of the alternating current line, which I have designated at 160. This action draws armature 69, which is carried to the extension of spring member 64, thereby tending to revolve spring member 64 about the pivot 64a, thereby insuring an actual open circuit between springs 64 and 71 even prior to the abutment of breaker 53 with the extension 64c of spring member 64.

It will be observed that the circuits are now ready to receive a signal impulse for rotation of the motor in a counter-clockwise direction and the operation heretofore described may then be repeated. At the end of such repeated operation the disc is restored by operation of the signaling circuit. It will therefore be seen that any one of the control circuits may be energized in successive step by step movement, or the control circuits may be energized by the transmission of signaling energy over a time interval sufficient to move disc 37 in a counter-clockwise direction over the entire range of contact members 1, 2, 3, 4, 5, 6, 7, 8, etc. It will be understood that any number of brushes may be added to the disc system for controlling independent circuits on the landing field. In the reversal process the circuits which have been set by the counter-clockwise movement of disk 37 are successively restored to their deenergized condition. It will be understood that the disc 37 is moved in a clockwise direction in one step and not successively step by step, and by virtue of the restored action, the several circuits on the landing field which have been energized are rapidly restored to their normal deenergized condition.

In Fig. 2 I have shown in skeletonized form the direct current power circuit where the motor is initially at rest and the discs 37 and 38 have not been moved. The direct current supply 36 is shown furnishing energy from the A terminal of the generator through the tongue 63, contact 68, contact 89, solenoid 75, conductor 88, contacts 86, relay winding 84, relay winding 82, returning through lead 81—79 to the B side of the generator. The circuit just described is completed when the keying circuit at 102 is closed. By closing the circuit 102 relay 85 is operated, the armature moving to a position wherein the contacts are closed at 86 for initiating movement of the driving motor. The motor revolves to the first position shown in Fig. 3, which maintains the A. C. motor circuit closed and prepares the direct current circuit by moving strip 40 into contact with brush 41, and moving contacts 1c into contact with brush 43, completing the circuit through conductor 118, solenoid winding 114, conductor 119. Contacts 1 are closed at 78 by virtue of the fact that the direct current power circuit has been closed as shown in Fig. 3 through conductor 120, back to the A side of the direct current source 36. It will be understood that solenoid 114 is not energized until contacts at 112 are closed, which contacts are maintained open in the position of the circuit shown in Fig. 3 by energization of relay winding 109 which is energized so long as keying circuit 102 is closed. However, when the keying circuit 102 is opened winding 109 is no longer energized and contacts 112 closed by the deenergization of solenoid 109. The closed position of contacts 112 has been shown in Fig. 4, which results in the energization of winding 114 and the closing of contacts 113.

The closing of contacts 113 has been shown more clearly in Fig. 5 where the trip circuit is closed by the contacting of brush 47 with contact 1a, thus energizing solenoid 66 and insuring the opening of contacts 68, after each successive step in the movement of the discs 37 and 38. This operation insures the opening of the motor circuit after each successive operation or the completion of each selection or control of individual circuits. However, if the signaling keying circuit 102 is held closed continuously the trip circuit will not operate and the discs 37 and 38 move continuously until mechanical breaker 52 strikes the extremity 63c of the main relay contacts. The discs stop by reason of the open circuits at contacts 68. As the contact opens at 68 the apparatus is free to receive the next control signal, which signal may step the discs 37 and 38 counter-clockwise, or if the discs have reached the limit of their movement the succeeding signal may reverse the direction of movement of the discs.

The arrangement of the circuits at the limit of counter-clockwise movement of the discs 37 and 38 has been shown in Fig. 6, where the mechanical breaker 52 has closed the contacts between spring member 63 and contact strip 67. The contact is closed between spring member 63b and contact 72, which completes the circuit through resistance R to the relay windings 93, leading through conductor 120 to the B side of the direct current source 36, thereby insuring the movement of relay armature 76 into an upward position, opening contacts at 78 and closing the contacts at 77. In this particular circuit

diagram I have not shown the complete circuit from contact 77 but may provide other control circuits adapted to be actuated by the closing of the contact 77. The reverse circuit is closed to the motor system through relay 136. The closing of this control circuit can only be brought about by the actuation of the keying circuit 102, and the circuit may be traced from the keying circuit 102 through relay winding 141, brush 45, contact member 8c, strip 40, brush 41 to contacts 112, which are normally closed when keying circuit 102 is open. When the keying circuit 102 is closed solenoid 126 is energized and contacts 112 are opened, which restores the relays to their normal position and prepares the circuits for movement of the motor in a counter-clockwise direction from the cycle of movement.

In Fig. 7 I have shown the completely reversed position of the discs 37 and 38, where the discs have been moved counter-clockwise to restore all of the control circuits to their normal position. The mechanical breaker 53 contacts with projecting portion 64c of strip 64, opening contacts between 64 and 71, at the same time that such contacts are maintained in open position by energy picked up from brush 51 on contact strip 50, resulting in the energizing of solenoid winding 70 and the movement of strip 64 under control of armature 69. The circuits controlled by the disc are all restored to their original condition ready for repeat operation.

The circuits which I have designated 1, 2, 3, 4, 5, 6, 7 and 8 in Fig. 1 lead through a cable from the receiving station, as shown in Fig. 8 to the several control circuits on the landing field, as illustrated in Fig. 8. Antennæ 172 and 173 supported by masts 170 and 171 are located adjacent the landing field and connect to the receiving apparatus opposite the landing field. The circuits 1, 2, 3, 4, 5, 6, 7 and 8 extend to the equipment on the landing field.

The conductor 180 of the pair of conductors 122 energized from a source of alternating current is common to the several circuits on the landing field. Circuit 1 extends to the lights 181 on the landing field which serve to outline the four directions of the compass, the number of the landing field, the geographical location of the landing field and other data which is to be imparted to the pilot of the approaching aircraft. By closing the control circuit numbered 1 a circuit is completed from the alternating current source through the lamps 181 which are illuminated to advise the pilot of the geographical location over which he may be flying and the direction of flight or bearing of the landing field. Circuit 2 extends through the lights 182 which designate the limits of the landing field, which lights are illuminated when the control signal necessary to actuate control circuit 2 is received. In order to energize circuit 2 the disc 37 must be advanced to a position where strip 50 bridges contact 2. Circuit 3 extends to the lights 183 which designate the landing zone on the landing field.

Circuit 4 extends to the flood lights 184 which are carried by the revolving carriers 133 for sweeping the landing field with light. In order that the angular position of the flood lights 184 may be properly regulated, a control circuit 5 is provided on the driving motors 132, enabling these motors to revolve the tables 133 to a position which will permit the required illumination of the field for a safe landing.

To advise the pilot of the positive opening of the circuit to the driving motors 132, an indicator lamp 135 of distinctive color may be energized by control circuit 6 by the transmission of a control signal which will shift disc 37 to contact 6.

Additional control circuits 7 and 8 may be provided on the landing field, and other control circuits may be established for performing other functions under control of additional contacts on the movement of disc 37.

To recapitulate the sequence of operation employed in the control apparatus of my invention, Figs. 2, 3, 4, 5, 6 and 7 may be considered as showing the successive steps in the operation of the control circuits. Fig. 2 shows the application of the power to the motor control circuit. Direct current is employed to condition the control circuit whereby the driving motor is energized from the alternating current supply circuit and operates to shift the discs 37 and 38 to the first control position when key 102 is momentarily depressed. As soon as key 102 is released, the motor circuit is de-energized and the apparatus is brought to rest. When the keying circuit 102 is opened winding 109 is de-energized and contacts 112 are closed thus energizing winding 114 and closing contacts 113 as illustrated in Fig. 4. The trip circuit is closed by the contacting of brush 47 with contact 1a thus energizing solenoid 66 and opening the contact 68 which insures the cutting off of the motor circuit after each successive operation or completion of each selection or control of individual circuits. This latter operation is pictured in Fig. 5. It will of course be understood that if the signaling key 102 is held closed continuously the trip circuit will not operate and the discs 37 and 38 will move continuously until mechanical breaker 52 strikes the extremity 63c of the main relay contacts. The condition existing at the limit of the counter-clockwise movement of discs 37 and 38 is shown in Fig. 6 where the mechanical breaker 52 has closed the contacts between the spring member 63 and contact strip 67. The closing of this circuit operates to enable the motor to be energized in a clockwise direction for restoring the contact system carried by discs 37 and 38 to the original position which is shown in Fig. 7. The complete cycle is then ready for repetition. Depending upon the time period of closing the keying circuit 102, the control circuits may be selected progressively or all of the circuits operated by the continued closing circuit 102. The keying circuit 102 is the equivalent of a relay circuit operated from the output circuit of a radio receiver which may receive signaling energy from an aircraft transmitter enabling the pilot to selectively energize desired circuits at a landing field. The character of transmitter employed with the system of my invention is set forth more fully in my copending application Serial No. 390,148, filed September 3, 1929, now Letters Patent 1,828,672, dated October 20, 1931. Movements of the disc 37 in a step by step counter clockwise direction serves to close the different control circuits 1, 2, 3, 4, 5, 6, 7 and 8 indicated in Figure 1. Fig. 8 shows a continuation of the control circuits and illustrates the extension of the circuits to the apparatus on the landing field by which the various devices in circuit with the landing field are controlled. Circuit 1 as heretofore noted serves to control lights 181 enabling the pilot to light the lamps which spell out the identity of the landing field. Circuit 2 controls the lights 182 which designate the limits of the landing field. Circuit 3 controls the lights 183 which mark the

landing zone on the landing field. Circuit 4 controls the flood lights 184. Circuit 5 controls the driving motors which operate the flood lights. Circuit 6 controls light 135 for indicating to the pilot that all circuits have been closed for actuating the apparatus on the landing field so that a safe landing may be made. The additional control circuits 7 and 8 may lead to other parts of the landing field.

I have found the apparatus of my invention practical in its construction and successful in its operation for informing pilots of aircraft of all conditions of the landing field during fog or darkness. The apparatus is relatively inexpensive and when installed in an aircraft landing system insures safety in air navigation by providing means readily operable under control of the pilot for indicating landing conditions preparatory to the landing of the aircraft.

While I have described my invention in certain preferred embodiments, I desire that it be understood that modifications may be made and that no limitations upon my invention are intended other than are imposed by the scope of the appended claims.

What I claim as new and desire to secure by Letters Patent of the United States is as follows:

1. An electrical control system comprising a reversible drive, an actuating circuit connected with said reversible drive, a contact system controlled by said drive, a plurality of control circuits individually and successively operable by movement of said contact system step-by-step in a counter-clockwise direction to selected positions, a set of relays for controlling the actuating circuit of said reversible drive for effecting counter-clockwise movement of said drive, a separate set of relays for controlling the actuating circuit of said reversible drive for effecting the clockwise uninterrupted movement of said contact system, and means operative upon the limits of movement of said contact system for rendering said first mentioned set of relays ineffective, and rendering said second mentioned set of relays effective for restoring said contact system to the original position thereof.

2. An electrical control system comprising a reversible drive, an actuating circuit connected with said reversible drive, a contact system controlled by said drive, a plurality of control circuits individually and successively operable by movement of said contact system to selected positions, a set of relays for controlling the actuating circuit of said reversible drive for effecting counter-clockwise step-by-step movement of said drive, a separate set of relays for controlling the actuating circuit of said reversible drive for effecting the clockwise continuous movement of said contact system, and electromagnetic means operative upon the limits of movement of said contact system for rendering said first mentioned set of relays ineffective, and rendering said second mentioned set of relays effective for restoring said contact system to the original position thereof.

3. An electrical control system comprising a reversible drive, an actuating circuit for said reversible drive, a contact system controlled by said drive, a plurality of control circuits individually and successively operable by movement of said contact system, a set of relays for controlling the actuating circuit of said reversible drive for effecting counter-clockwise step-by-step progressive movement of said drive to selected positions, a separate set of relays for controlling the actuating circuit of said reversible drive for effecting clockwise continuous movement of said contact system, and composite mechanical and electromagnetic means operative upon the limits of movement of said contact system for rendering said first mentioned set of relays ineffective, and rendering said second mentioned set of relays effective for restoring said contact system to the original position thereof.

SEARCY L. McFADIN.