July 31, 1923. 1,463,217

F. J. KRISTOFEK

MINIATURE PARKING SIGN

Filed June 23, 1921

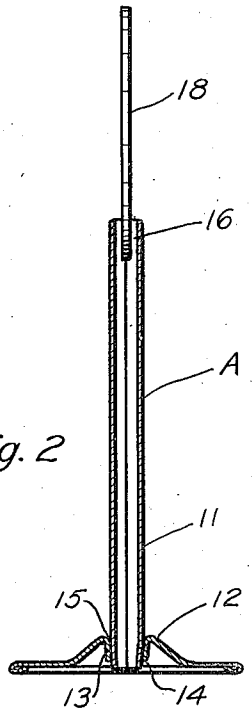

Fig. 2

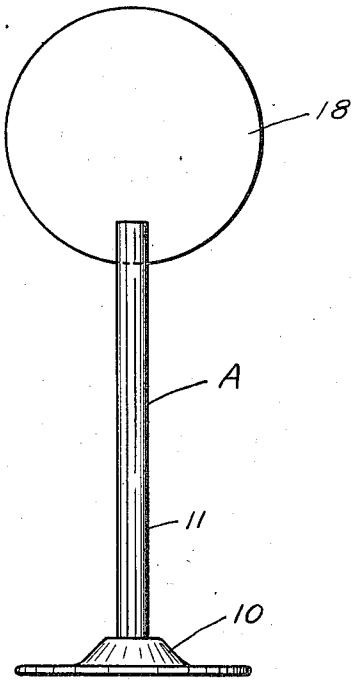

Fig. 1

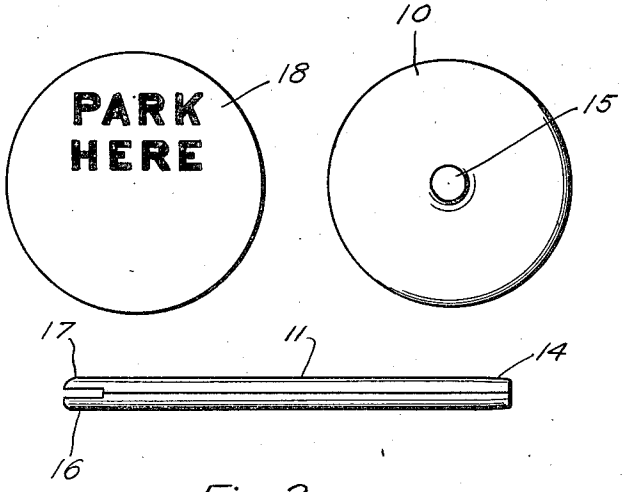

Fig. 3

Inventor:
Frank J. Kristofek
by: Howard Riecke
his Attorney

Patented July 31, 1923. 1,463,217

UNITED STATES PATENT OFFICE.

FRANK J. KRISTOFEK, OF ST. PAUL, MINNESOTA, ASSIGNOR TO BROWN & BIGELOW, OF ST. PAUL, MINNESOTA, A CORPORATION OF MINNESOTA.

MINIATURE PARKING SIGN.

Application filed June 23, 1921. Serial No. 479,824.

To all whom it may concern:

Be it known that I, FRANK J. KRISTOFEK, a citizen of the United States, residing at St. Paul, in the county of Ramsey and State of Minnesota, have invented a new and useful Improvement in Miniature Parking Signs, of which the following is a specification.

This invention relates to a miniature parking sign which is designed to be used as a desk utility and the primary object of which is in a device which is separable and collapsible into a compact state so that it can be stored in cartons for mailing or shipping as may be desired. This parking sign is designed to simulate the ordinary street parking sidewalk sign and provides a device of an attractive nature adaptable for various uses.

The feature of the invention includes making the parking sign of simple, inexpensive parts, namely, a base-portion, a tubular standard and a disk sign plate all of which are separable from each other, which simplifies the manufacture and allows the sign to be taken apart and stored in a small space. This is very important in a device of this nature where it is used in a miniature state as it is desirable to send them through the mails individually and collectively and thus making it much easier to handle.

It is a material advantage in the manufacture of this invention to have the parts separable. This construction allows the base to be made of a stamping which simulates the ordinary base of a sidewalk parking sign; and the standard can be made by stamping it to make a tubular member, whereas the display plate constitutes a simple disk stamped from any suitable material and is held in the bifurcated upper end of the standard. When the base and standard are made of metal and the display plate or disk is made of paper a very attractive sign is formed. The paper display disk is rigidly engaged by the standard in a very effective manner.

In the drawings forming a part of this specification:

Figure 1 is a side view in elevation of the parking sign.

Figure 2 is a central sectional view of the parking sign.

Figure 3 illustrates the parts of the parking sign when separated from each other.

The parking sign A is of a miniature nature being designed to simulate the ordinary sidewalk parking signs used to indicate, or set off spaces along the curb for parking automobiles. In its miniature form this parking sign is adapted to be used for various purposes, as a desk utility being of a novel construction with an attractive design.

The parking sign A is formed with a disk-like base portion 10 which is adapted to support a tubular standard 11. The base 10 is formed with a raised portion 12 and an inwardly extending annular flange 13 which frictionally engages the lower end 14 of the standard 11 to rigidly hold and support the standard in a vertical position. The flange 13 is extended to form a vertical portion which holds the standard 11 perpendicular to the base 10.

The standard 11 is in the form of a hollow tubing, being stamped from sheet metal and formed cylindrical with a longitudinal seam extending throughout its length. Upon inserting the end 14 into the opening 15 of the base 10 the standard at this point is slightly compressed to hold it frictionally under spring tension in the base 10. The base 10 can be formed of any suitable material and when desired can be of material which is heavier than the remainder of the parking sign so as to form a base portion with sufficient weight to balance the sign.

The upper end 16 of the standard 11 is bifurcated to form a slot 17 into which the display disk or plate 18 engages in a manner to firmly grip the same to support it centrally above the standard. The tubular nature of the standard 11 causes the ends of the bifurcated portion 16 to firmly engage the display plate. Where the disk 18 is made of paper and the standard 11 of metal the sharp edges of the bifurcated ends 16 of the standard 11 cut into the surface of the paper in a very effective manner to engage and hold the display plate 18 firmly to the standard.

These parking signs are very attractive in their miniature form and have been in considerable demand for a desk novelty.

In accordance with the patent statutes I have described the principles of operation of my invention and have illustrated in the drawings a particular form and construction, but I desire to have it understood that I do not wish to confine myself to the par-

ticular design illustrated and wish to have it understood that the invention can be carried out by other means and applied to uses other than those set forth within the scope of the following claims:

1. A display article including a tubular seamed standard, a divided end formed on said standard, a display member adapted to be engaged by said divided end under tension, a base member and an annular depending flange within said base member adapted to engage the end of said standard to compress the same to hold it rigidly under spring tension to said base member in a vertical position.

2. A miniature parking sign comprising a base member formed with a central upwardly projecting portion, a central opening formed in said base portion, a downwardly depending flange having a vertical side wall extending about said opening, a tubular standard one end of which is adapted to be inserted in and compressed by said depending flange to hold it rigidly connected to said base and a bifurcated end on said standard adapted to detachably secure a display member on the upper end of said standard.

FRANK J. KRISTOFEK.