July 4, 1961 C. D. BERGER 2,990,646

SOUND-ACTUATED DOLL

Original Filed Feb. 10, 1954

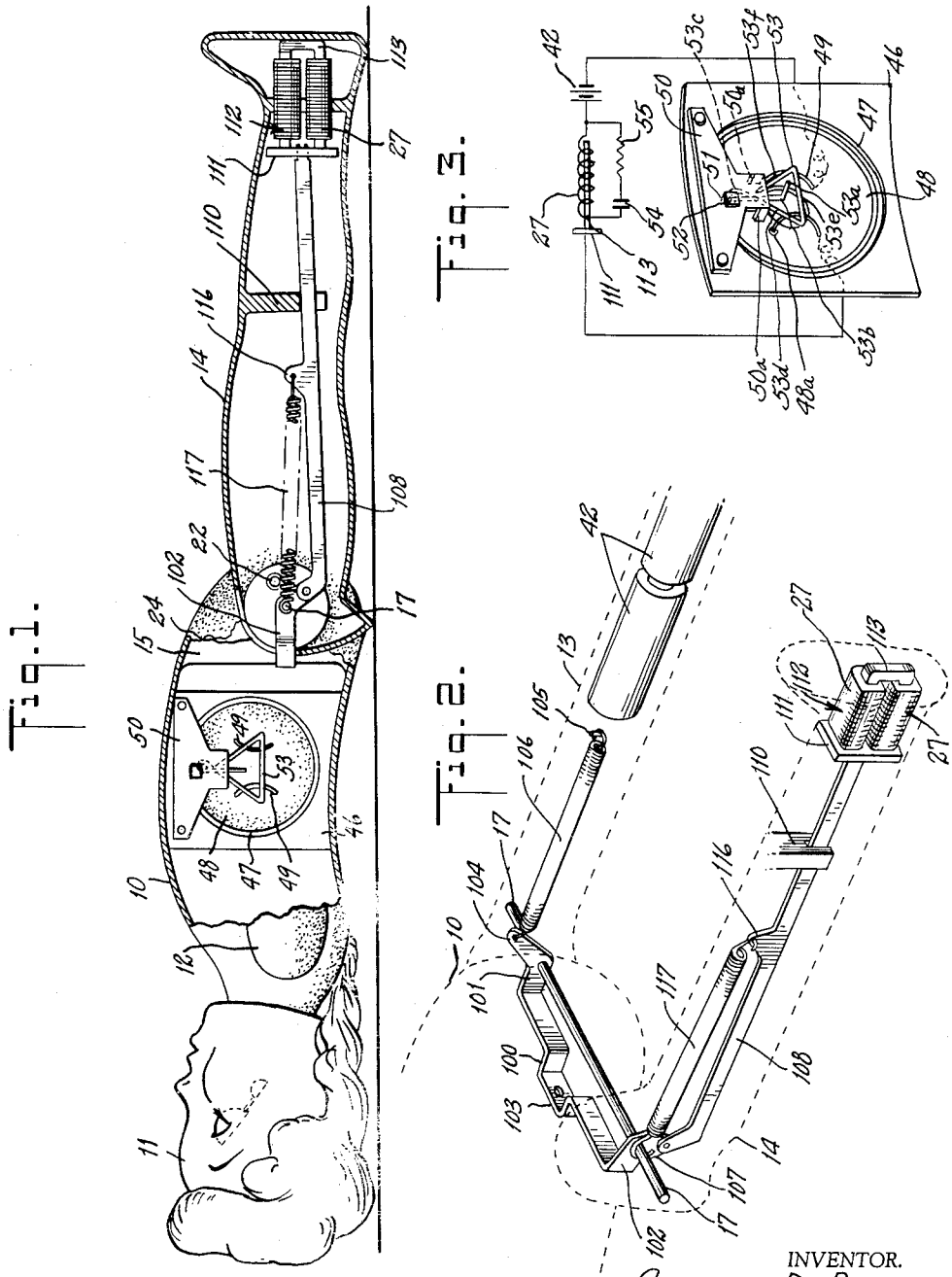

INVENTOR.
CHRISTIAN D. BERGER
BY Darby & Darby
ATTORNEYS

United States Patent Office

2,990,646

Patented July 4, 1961

1

2,990,646
SOUND-ACTUATED DOLL

Christian Dean Berger, 611 Church St., North Canton, Ohio

Original application Feb. 10, 1954, Ser. No. 409,316, now Patent No. 2,906,059, dated Sept. 29, 1959. Divided and this application Nov. 10, 1958, Ser. No. 773,090
5 Claims. (Cl. 46—245)

The present invention relates to a doll having means actuated in response to sound or other vibration which will produce movements of one part relative to another part thereof.

More particularly still the invention relates to a doll so arranged that it will rise from a supine to a sitting position in response to either sound or touch, thus simulating an awakening from sleep.

The doll of the present invention comprises generally a body portion and legs, the legs being pivotally mounted with respect to the body portion, spring means urging the doll from supine to a sitting position, and electromagnetic means which hold the doll in a supine position until an electric circuit supplying current to the electromagnetic means is broken in response to either sound or touch. The spring means is so arranged that the movement of the doll to its sitting position is relatively slow and at a lessening rate of acceleration as the doll nears its upright position, in contrast to catapult spring means wherein motion is rapid and deceleration sudden. The spring means are carefully designed to accomplish this relatively slow motion and less sudden stop in order that the motion of the doll may approximate that of a human rising to a sitting position.

This application is a division of my previous copending application entitled "Doll With Sound-Actuated Moving Parts," Serial No. 409,316, filed February 10, 1954, now Patent No. 2,906,059 issued September 29, 1959. This latter application was in turn a continuation-in-part of a prior application Serial No. 325,663, filed December 12, 1952, and abandoned February 11, 1954.

It is an object of the invention to produce a doll or like structure which will rise from a supine position in response to sound or touch.

It is another object of the invention to produce such a doll in which the sound-actuating means is of sufficient sensitivity so that the action described may be produced in response to sounds of moderate intensity without necessitating that the sound-receiving mechanism be exposed or that the doll body be provided with apertures to permit the sound to reach the sound sensitive device.

It is another object of the invention to produce a doll as above described having a realistic motion from the supine to the sitting position, that is, a motion that is smooth and which terminates with a gradual rather than a sudden deceleration.

It is a further object of the invention to provide a doll the legs of which are so designed as to provide stability and prevent toppling over of the doll upon arriving at a sitting position or when placed in that position.

It is a still further object of the invention to provide electromagnetic means for overcoming the spring torque and maintaining the doll in a supine position, the electromagnet and its circuit being such that the restraining force will be relatively great and the drain upon the battery supplying the restraining force low in order to secure long life of the batteries employed.

It is a still further object of the invention to provide a doll as described having a low weight thereby diminishing the chances of breakage and to provide a doll of the type described which may be economically manufactured and which is reliable in operation.

2

Other objects and features of the invention will be apparent when the following description is considered in connection with the annexed drawings, in which,

FIGURE 1 is a side elevational view partly broken away of a doll according to the invention, the doll being shown in supine position and resting upon a substantially horizontal surface;

FIGURE 2 is a perspective view of the actuating mechanism for the doll of FIG. 1; and

FIGURE 3 is a detailed perspective view of the sound-actuated circuit-breaking mechanism of the doll of FIGURE 1 and shows schematically the electric circuit controlled by circuit-breaking mechanism.

Before discussing the details of the doll structure the theoretical considerations affecting the proper design of the spring-actuating means will be briefly discussed.

In order that the doll be capable of rising from a supine to a sitting position the "weight-moment" (moment or torque due to the weight) of the moving part of the doll, namely the torso (and attached head, arms and clothes thereon) about the axis of movement must be exceeded substantially by the weight-moment of a stationary part, for the torque of the spring-actuating means must be greater than the moment of the moving part of the doll, and must be less than the weight-moment of the stationary part of the doll. This is accomplished primarily by making the legs sufficiently heavy so that they more than balance the spring torque. In some embodiments this may be accomplished by making one leg only of sufficient weight to accomplish the desired result and in other embodiments the two legs may be fastened together to rotate in unison and the weight of two legs used to balance the moving part. Further, even when the two legs are independently movable the weight of each may contribute to balancing the movement of the moving part by utilizing a separate spring between the torso and each leg.

The spring or springs utilized to provide the torque required to overcome the weight-moment of the moving part may be supplied by extension or compression springs or by torsion springs.

The difference between the spring torque and the weight-moment at the supine position determine the initial angular acceleration of the doll. To be realistic, this acceleration should be small. But in order that the doll will respond to sound, with sufficient sensitivity, in the manner hereinafter to be described, the accelerating torque must be above a certain minimum. Tests on a large specimen of my invention indicate that for reliable operation the spring torque should exceed the weight-moment by a minimum of about 10% at the supine position and that 15% is a good practical value. Any further increase in spring torque required that the legs be correspondingly more heavily weighted to resist the spring torque which is undesirable from an overall weight standpoint.

Referring now to FIG. 1, there is shown therein a doll having a hollow torso **10** with a conventional head **11** and arms **12** mounted thereon. Torso **10** is pivotally mounted on a pair of hollow legs **13** and **14**, both legs are similarly attached to the torso **10**. The parts described above may be made of conventional materials used in doll and toy manufacture including, without limitation, rigid and semi-rigid plastics.

Most of the details of the mounting of torso **10** on legs **13** and **14** are clearly shown in FIG. 1. It will be seen that the axes of torso **10** and legs **13** and **14** are generally parallel and extend in the direction which will be taken as the longitudinal direction.

The base of torso **10** is provided with a vertically extending rib **15**. A shaft **17** extends through the rib **15** and also through holes in the sides of the torso **10**. Legs

13 and 14 are retained on the respective ends of shaft 17 with freedom of rotational movement by any suitable means not shown in detail. An eyelet 22 may be provided in each leg cooperating with an opening provided in the torso 10 to provide an opening for circuit wires extending between said elements located within the legs and other circuit elements located within torso 10. The circuit conductors are not shown except diagrammatically in FIG. 3.

Pivotally mounted on the shaft 17 is a U-shaped member 100, the arms 101 and 102 of which extend through arcuate slots 24 in the legs 13 and 14 respectively and the center portion 103 of which is fixed in any suitable manner to the torso 10. Beyond the shaft 17 arm 101 terminates in an upward extension 104 between which and the pin 105 fixed in the leg 13 a spring 106 extends. The arm 102 terminates in a downwardly extending portion 107 at the end of which a rod 108 is pivotally attached. Rod 108 is guided for longitudinal movement by means of the guide 110 in the leg 14 and this arm terminates in a magnet armature 111 having a flexible mounting so that the air gap may be minimized. Armature 111 of course cooperates with a suitable magnet 112 comprising the horseshoe-shaped core 113 and the windings 27.

Extending between lug 116 on the rod 108 and the shaft 17 is a spring 117 which spring thus urges the rod 108 to the left as seen in FIG. 2 and thus tends to rotate the U-shaped member 100 and torso 10 in a clockwise direction. A battery comprising dry cells 42 is mounted in the leg 13 in any suitable manner. It will be clear that with the construction just described when the doll is placed in its supine position the magnet armature 111 is held against the magnet pole pieces and the doll is retained in this position when the magnet 112 is energized. When the circuit is broken springs 106 and 117 will cause clockwise rotation of the torso 10 to a sitting position and the circuit will then remain broken due to the fact that this circuit leads through the magnet armature as will later be explained.

Electromagnet 112 is so constructed that when the doll is placed in a supine position thereby forcing armature 111 against the electromagnet core 113, the electric circuit of winding 27 is completed and armature 111 is attracted to the pole faces of the core 113 with sufficient force to overcome that portion of the torque produced by springs 106 and 117 which is not balanced by the weight moment of the moving part of the doll and to maintain rod 108 in the position in which it is shown in FIG. 1. The force of the spring keeps the body and head from resting on a supporting surface while a magnet force restrains the body from going higher. When the circuit of winding 27 is momentarily interrupted, spring 117 actuates rod 108 to move armature 111 away from electromagnet 112 thereby actuating arm 102 and causing torso 10 to move to the sitting position. Leg 14 is sufficiently weighted by the parts mounted thereon including the electromagnet 112 so that it remains in a horizontal position while torso 10 moves from the supine to the sitting position. Leg 13 is likewise sufficiently weighted by the parts mounted therein including the battery 42, so that it remains in its horizontal position while torso 10 moves to the sitting position. Leg 13 thereby provides additional leg weight-moment.

The electric circuit for windings 27 includes the battery 42, preferably located within the leg 13. The battery 42 may be retained in any suitable battery compartment. Access may be had through the bottom of the doll's foot, for example.

As is schematically illustrated in FIG. 3, one terminal of the battery 42 is connected to one end of a winding 27. For simplicity, the windings 27 on the horeshoe magnet core 113 are shown as a single winding in FIG. 3. The other end of winding 27 is connected to the electromagnet core 113. Thus the circuit is extended from the electromagnet core through the armature 111 when the doll is in supine position. From armature 111 the circuit leads to one terminal of a sound controlled circuit-completition means located within the torso 10, and from the other terminal of the sound controlled circuit completion means, a conductor leads to the opposite terminal of battery 42. FIG. 3 is a detailed view of the circuit completion means showing the positions of the parts when the doll is in its supine position.

The circuit completion means includes a mounting plate 46 which extends longitudinally of the doll and vertically from top to bottom as seen in FIG. 1. Plate 46 is provided with a circular opening 47 therein in which is mounted the frusto-conical diaphragm 48, the diaphragm having its larger rim mounted resiliently on the rim of the opening 47 in plate 46 in a manner similar to the mounting of the conventional home radio receiver loudspeaker. Convex wire contact elements 49 are mounted on the front face of diaphragm 48, these elements extending vertically one on either side of the smaller opening in the diaphragm. The ends of the wires 49 extend through suitable eyelet openings 48*a* in the diaphragm 48 and are fixed in place in these openings in any suitable manner. Alternatively wires 49 may be spring wires and may be frictionally held in place within the openings 48*a*. One of the elements 49 is electrically connected to the magnet armature 111 while the other of the elements 49 is connected to one pole of battery 42.

Pendulum means are provided for making releasable electrical contact between the two elements 49, this pendulum means including a plate-like support member 50 which is secured to the top portion of the plate 46. A portion of the member 50 located at the center thereof is punched out to provide a rearwardly extending ear 51 which is positioned between and above the contact elements 49. The ear 51 has an opening therein in which is pivotally mounted the pendulum 53. Member 50 is provided with ears 50*a* which serve as stops to limit the movement of pendulum 53.

Pendulum 53 is preferably formed from a single piece of wire and comprises a generally triangular portion consisting of the portions 53*d*, 53*e*, and 53*f*. Portion 53*d* joins a portion 53*c* which extends through the hole 52 in the ear 51 thus forming a pivot for the pendulum. Joining the portion 53*c* is a portion 53*b* which extends downwardly and terminates in a portion 53*a* which extends horizontally and toward the viewer as seen in FIG. 1. In the rest position of pendulum 53 as seen in FIG. 1, that is, with the doll in the supine position on a substantially horizontal surface, the base 53*e* of the triangular portion of the pendulum 53 extends substantially horizontally and makes contact with the elements 49 slightly below their center points, the ends of the contact arm 53*e* extending slightly beyond the contact elements 49.

Thus the circuit of the electromagnet winding is completed and the magnetic attraction of armature 111 holds it against the upper end face of electromagnet 112 despite the urging of spring 117 in the opposite direction. When the pendulum 53 is in this position portion 53*b* extends substantially vertically and portion 53*a* extends forwardly of support member 50. Pendulum 53 is rotatable about its axis, that is, about the axis of hole 52 and is also slidable within the hole 52 to a limited extent. Diaphragm 48 may be caused to vibrate either because of sound waves striking it or as a result of vibrations set up in mounting plate 46, such for example as by a blow being struck upon the doll. Sound vibrations received by the diaphragm 48 are transmitted by one or both contact elements 49 to the pendulum 53 thereby setting the pendulum into vibration. Since the period of vibration of pendulum 53 differs materially from the period of vibration of the diaphragm 48 the result of vibration of pendulum 53, whether induced by sound waves or by touching the doll, is to momentarily open the circuit at elements 49 thereby releasing the arma-

ture **111** and permitting spring **117** to raise the torso **10** to sitting position.

From the foregoing it will be seen that the mode of operation of the doll is extremely simple. The doll is first placed in a sitting position on a level surface. The torso **10** is then pushed down to the supine position as schematically shown in FIG. 1, armature **111** making contact with the pole face of the horseshoe magnet core **113** causing the electrical circuit heretofore described to be completed. The torso **10** is then carefully released in this position in order to prevent vibration of the pendulum **53**, and the armature is held against the pole face thus maintaining the torso in its supine position. Upon sound waves striking the diaphragm **48** or a jarring of the doll the pendulum **53** is caused to vibrate and this results in momentary breaking of the circuit at one or both of the contact elements **49**, thus de-energizing the magnet coil **27** and releasing the armature **111**. Spring **117** then forces the armature **111** in a direction to rotate torso **10** clockwise as seen in FIG. 1, thus simulating a movement to a sitting position.

As shown in FIG. 3, a spark arresting condenser **54** and resistor **55** are connected in series with one another and in parallel with winding **27**.

While I have described a preferred form of my invention, it will be understood that many modifications will be made and that many well-known mechanisms may be substituted for the specific ones described and shown, I wish therefore not to be limited by the foregoing description which was given solely for the purposes of illustration, but on the contrary to be limited only by the claims granted to me.

What is claimed is:

1. A toy doll adapted to move from an initial supine position to a sitting position comprising, in combination, a first body portion including a torso, arms and head, a second body portion including legs, means pivotally mounting said legs on the lower part of said torso, means weighting at least one of said legs to provide a weight-moment for said second body portion about said pivotal connection greater than the weight-moment of said first body portion, resilient means urging said first body portion to rotate about said pivotal connection to place said doll in a sitting position, the moment energy of said resilient means about said pivotal connection being greater than the weight-moment of said torso, electromagnetic means within one of said legs for holding said torso in the supine position, an electrical circuit including a current source and said electromagnetic means, said electromagnetic holding means comprising an electromagnet mechanically connected to one body portion and a cooperating electromagnetic armature mechanically connected to another body portion, said armature being adapted to move into electrical contact with the pole pieces of said electromagnet when he doll is manually placed in its supine position to thereby close said electrical circuit and actuate said electromagnet, and vibration actuated means for breaking said circuit and de-energizing said electromagnetic means to permit said doll to assume said sitting position under urging of said resilient means, said deenergizing means comprising a switch element connected in series in said electrical circuit with said electromagnetic armature and pole pieces, whereby said electrical circuit is broken by actuation of said vibration actuated means and said circuit is re-established by placing said doll in the supine position to close the circuit through said vibration actuated means and through said magnet armature and pole pieces, said electromagnet being spaced from said pivotally mounting means toward the extremity of said leg thereby comprising at least a portion of said weighting means for said leg, said armature being adjacent said magnet.

2. A toy doll adapted to move from an initial supine position to a sitting position comprising, in combination, a first body portion including a torso, arms and head, a second body portion including legs, means pivotally mounting said legs on the lower part of said torso, means weighting at least one of said legs to provide a weight-moment for said second body portion about said pivotal connection greater than the weight-moment of said first body portion, resilient means urging said first body portion to rotate about said pivotal connection to place said doll in a sitting position, the moment energy of said resilient means about said pivotal connection being greater than the weight-moment of said torso, electromagnetic means within one of said legs for holding said torso in the supine position, an electrical circuit including a current source and said electromagnetic means, said electromangetic holding means comprising an electromagnet mechanically connected to one body portion and a cooperating electromagnetic armature mechanically connected to another body portion, and vibration actuated means for breaking said circuit and deenergizing said electromagnetic means to permit said doll to assume said sitting position under urging of said resilient means, said electromagnet being located in one of said legs spaced from said pivotally mounting means toward the extremity of said leg thereby comprising at least a portion of said weighting means for said leg, said armature being likewise located in one leg adjacent said magnet, and said armature being connected to said torso.

3. A toy doll adapted to move from an initial supine position to a sitting position comprising, in combination, a first body portion including a torso, arms and head, a second body portion including legs, means pivotally mounting said legs on the lower part of said torso, means weighting at least one of said legs to provide a weight-moment for said second body portion about said pivotal connection greater than the weight-moment of said first body portion, resilient means urging said first body portion to rotate about said pivotal connection to place said doll in a sitting position, the moment energy of said resilient means about said pivotal connectoin being greater than the weight-moment of said torso, the difference between the turning effort of said resilient means and the weight-moment of said torso being greater at the supine position than at the sitting position, whereby said doll is moved to said sitting position with a gradually decreasing acceleration, electromagnetic means within one of said legs for holding said torso in the supine position, an electrical circuit including said electromagnetic means and a battery affixed in one of said legs near the extremity thereof, said electromagnetic holding means comprising an electromagnet affixed in the other of said legs near the extremity thereof, said electromagnet and said battery thereby comprising at least a part of said weighting means providing a weight-moment for said second body portion greater than the weight-moment of said first body portion, and a cooperating electromagnetic armature connected to said first body portion, said armature being adapted to move into contact with the pole pieces of said electromagnet when the doll is manually placed in its supine position to thereby close said electrical circuit and actuate said electromagnet, and vibration actuated means for breaking said circuit and de-energizing said electromagnetic means to permit said doll to assume said sitting position under urging of said resilient means, said de-energizing means comprising a switch element connected in series in said electrical circuit, whereby said electrical circuit is broken by actuation of said vibration actuated means and said circuit is re-established by placing said doll in the supine position to close the circuit through said vibration actuated means and through said electromagnet.

4. A toy doll adapted to move from an initial supine position to a sitting position comprising, in combination, a first body portion including a torso, arms and head, a second body portion including legs, means pivotally mounting said legs on the lower portion of said torso, means weighting at least one of said legs to provide a

weight-moment for said second body portion about said pivotal connection greater than the weight-moment of said first body portion, resilient means urging said first body portion to rotate about said pivotal connection to place said doll in a sitting position, the moment energy of said resilient means about said pivotal connection being greater than the weight-moment of said torso, the difference between the turning effort of said resilient means and the weight-moment of said torso being greater at the supine position than at the sitting position, whereby said doll is moved to said sitting position with a gradually decreasing acceleration, electromagnetic means within one of said legs for holding said torso in the supine position, an electrical circuit including a current source and said electromagnetic means, said electromagnetic holding means comprising an electromagnet affixed in one of said legs and spaced toward the end of said leg from said pivotally mounting means, said electromagnet thereby comprising a part of said weighting means of one of said legs, and a cooperating electromagnet armature connected to said first body portion, said armature being adapted to move into contact with the pole pieces of said electromagnet when the doll is manually placed in its supine position, means for closing said electrical circuit to actuate said electromagnet, in response to placement of said doll in supine position, and vibration actuated means for breaking said circuit and deenergizing said electromagnetic means to permit said doll to assume said sitting position under urging of said resilient means, said de-energizing means comprising a switch element connected in series in said electrical circuit, whereby said electrical circuit is broken by actuation of said vibration actuated means and said circuit is reestablished by placing said doll in the supine position to close the circuit through said vibration actuated means and through said electromagnet.

5. A toy doll adapted to move from an initial supine position to a sitting position comprising, in combination,

a first body portion including a torso, arms and head, a second body portion including legs, means pivotally mounting said legs on the lower part of said torso, means weighting at least one of said legs to provide a weight-moment for said second body portion about said pivotal connection greater than the weight-moment of said first body portion, resilient means urging said first body portion to rotate about said pivotal connection to place said doll in a sitting position, the moment energy of said resilient means about said pivotal connection being greater than the weight-moment of said torso, electromagnetic means within one of said legs for holding said torso in the supine position, an electrical circuit including a current source and said electromagnetic means, said electromagnetic holding means comprising an electromagnet mounted in one of said legs and spaced toward the end of said leg from said pivotally mounting means, said electromagnet thereby comprising a part of said weighting means for one of said legs, said electromagnet being connected to one body portion, a piece of magnetic material connected to another body portion, said magnetic material being placed to be in contact with the pole pieces of said electromagnet when the doll is manually placed in its supine position, means for closing said electrical circuit to actuate said electromagnet in response to placement of said doll in supine position, and vibration actuated means for breaking said circuit and de-energizng said electromagnetic means to permit said doll to assume said sitting position under urging of said resilient means, said de-energizing means comprising a switch element connected in series in said electrical circuit, whereby said electrical circuit is broken by actuation of said vibration actuated means and said circuit is re-established by placing said doll in the supine position to close the circuit through said vibration actuated means and through said electromagnet.

No references cited.