US00D864781S

(12) United States Design Patent

Behling et al.

(10) Patent No.: US D864,781 S
(45) Date of Patent: ** Oct. 29, 2019

(54) **WATCH MOVEMENT**

(71) Applicant: **LVMH Swiss Manufactures SA**, La Chaux-de-Fonds (CH)

(72) Inventors: **Christoph Behling**, London (GB); **Gaylord Geneau de Lamarliere**, Le Cerneux-Veusil (CH)

(73) Assignee: **LVMH SWISS MANUFACTURES SA**, La Chaux-de-Fonds (CH)

(**) Term: **15 Years**

(21) Appl. No.: **29/616,786**

(22) Filed: **Sep. 8, 2017**

(30) **Foreign Application Priority Data**

Mar. 17, 2017 (WO) DM/096 227

(51) **LOC (12) Cl.** **10-07**

(52) **U.S. Cl.**
USPC **D10/129**

(58) **Field of Classification Search**
USPC D10/1–3, 6, 14–16, 23, 30–39, 41, 65, D10/70, 122–132; D11/95, 101, 107, D11/109, 110, 224; D14/344
See application file for complete search history.

(56) **References Cited**

U.S. PATENT DOCUMENTS

3,621,647	A *	11/1971	Erard	G04B 5/02	368/148
D336,865	S *	6/1993	Besson	D10/128	
D483,284	S *	12/2003	Chien	D10/129	
D611,866	S *	3/2010	Dias	D10/129	
D627,250	S *	11/2010	Dias	D10/125	
D629,322	S *	12/2010	Behling	D10/124	
7,905,655	B2 *	3/2011	Jolidon	G04B 1/12	368/101
D636,692	S *	4/2011	Pospieszny	D10/129	
D658,516	S *	5/2012	Mille	D10/39	
8,498,180	B2 *	7/2013	Ruchonnet	G04B 19/207	368/140
D708,075	S *	7/2014	Mille	D10/39	
D739,286	S *	9/2015	Fazio	D10/129	
D739,287	S *	9/2015	Fazio	D10/129	
D739,288	S *	9/2015	Fazio	D10/129	
D742,271	S *	11/2015	Boulangeot	D10/129	
D743,814	S *	11/2015	Miodrag	D10/125	
D748,517	S *	2/2016	Fazio	D10/129	
D756,245	S *	5/2016	Mille	D10/126	
9,645,550	B2 *	5/2017	Corthesy	G04B 17/285	
2003/0185105	A1 *	10/2003	Scheufele	G04B 17/285	368/124

(Continued)

Primary Examiner — Karen E Kearney
Assistant Examiner — Katherine Glennon
(74) *Attorney, Agent, or Firm* — Brinks Gilson & Lione; John C. Freeman

(57) **CLAIM**

The ornamental design for a watch movement, as shown and described.

DESCRIPTION

FIG. **1** is a perspective view of a watch movement according to the present invention;
FIG. **2** is a top view;
FIG. **3** is a bottom side view;
FIG. **4** is a front side view;
FIG. **5** is a rear view;
FIG. **6** is a left side view; and,
FIG. **7** is a right side view.
The ornamental design which is claimed is shown in solid lines in the drawings. The broken lines showing of portions of the article form no part of the claimed design.

1 Claim, 7 Drawing Sheets

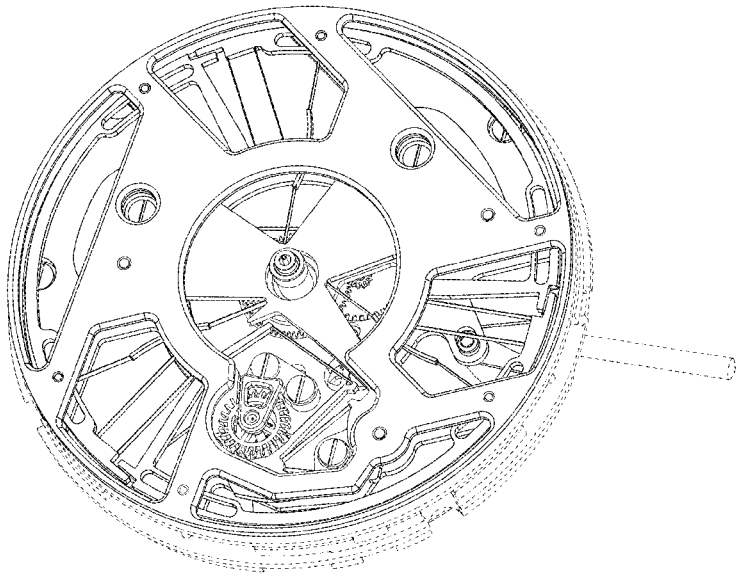

(56) **References Cited**

U.S. PATENT DOCUMENTS

2008/0074952	A1*	3/2008	Racine	G04B 19/247 368/38
2008/0084793	A1*	4/2008	Greubel	G04B 17/285 368/127
2010/0046328	A1*	2/2010	Olsen	G04B 19/04 368/30
2013/0148479	A1*	6/2013	Peters	G04B 13/00 368/127
2015/0220062	A1*	8/2015	Donze	G04B 17/285 368/202
2017/0031321	A1*	2/2017	Buttet	G04B 19/06

* cited by examiner

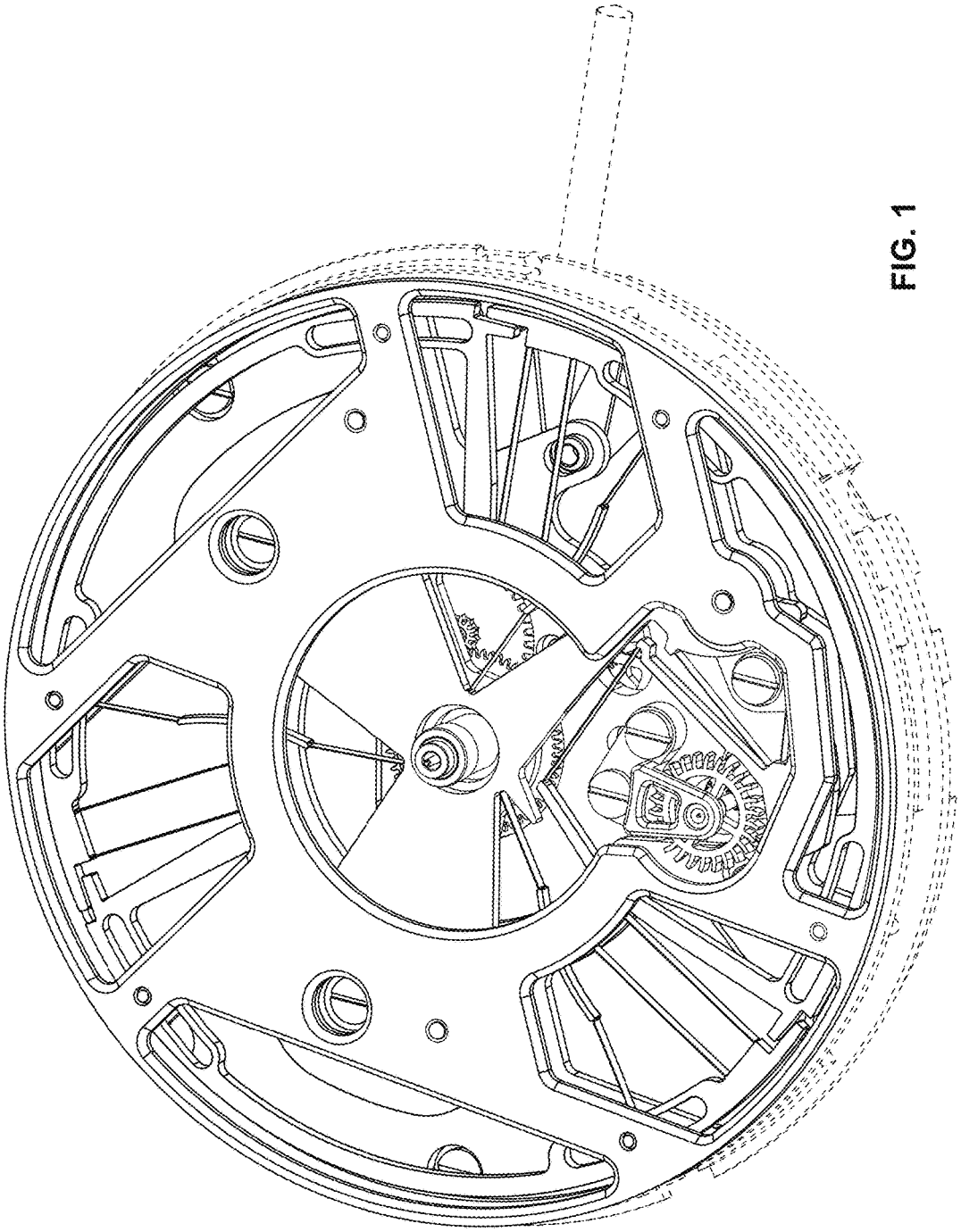

FIG. 1

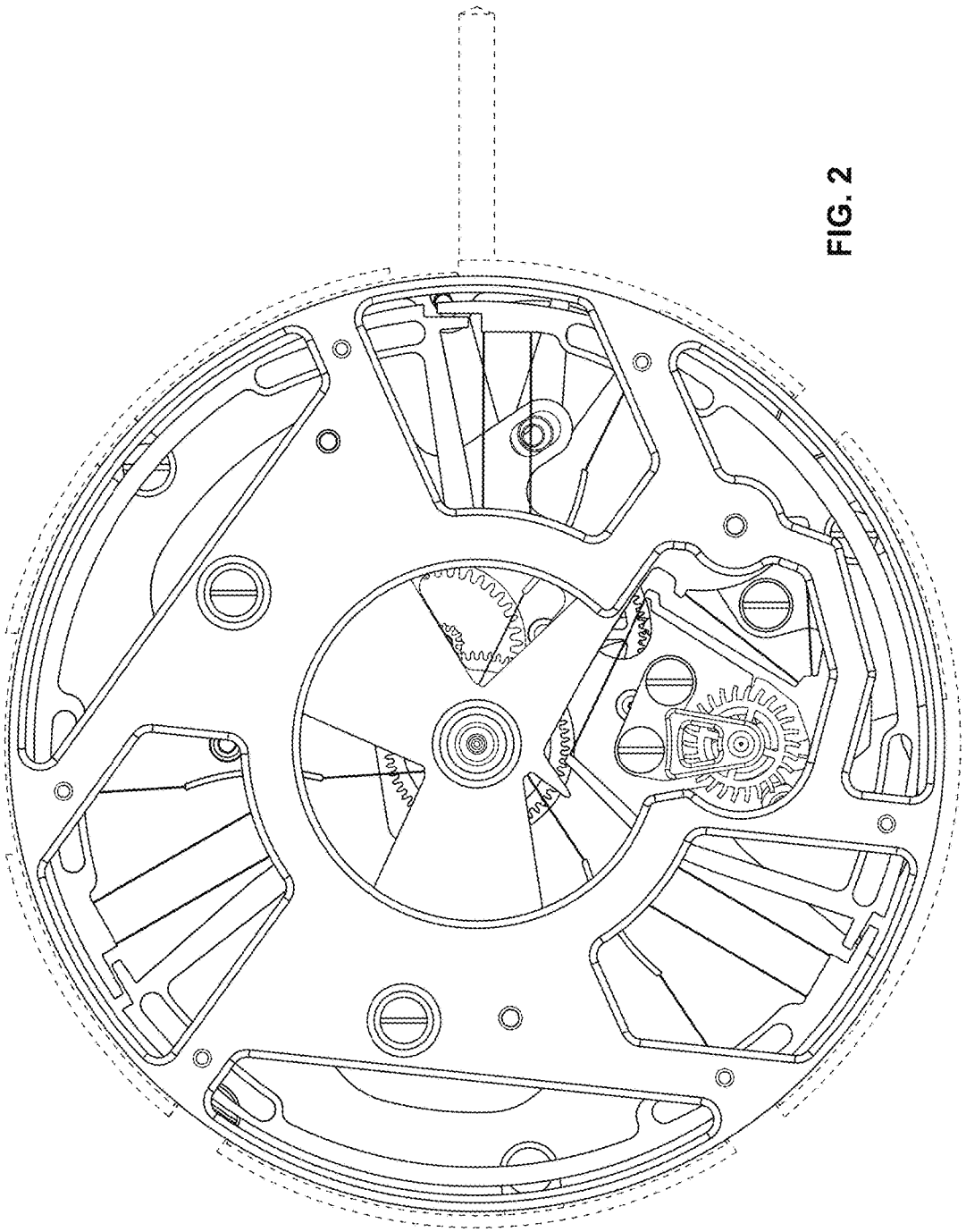

FIG. 2

FIG. 3

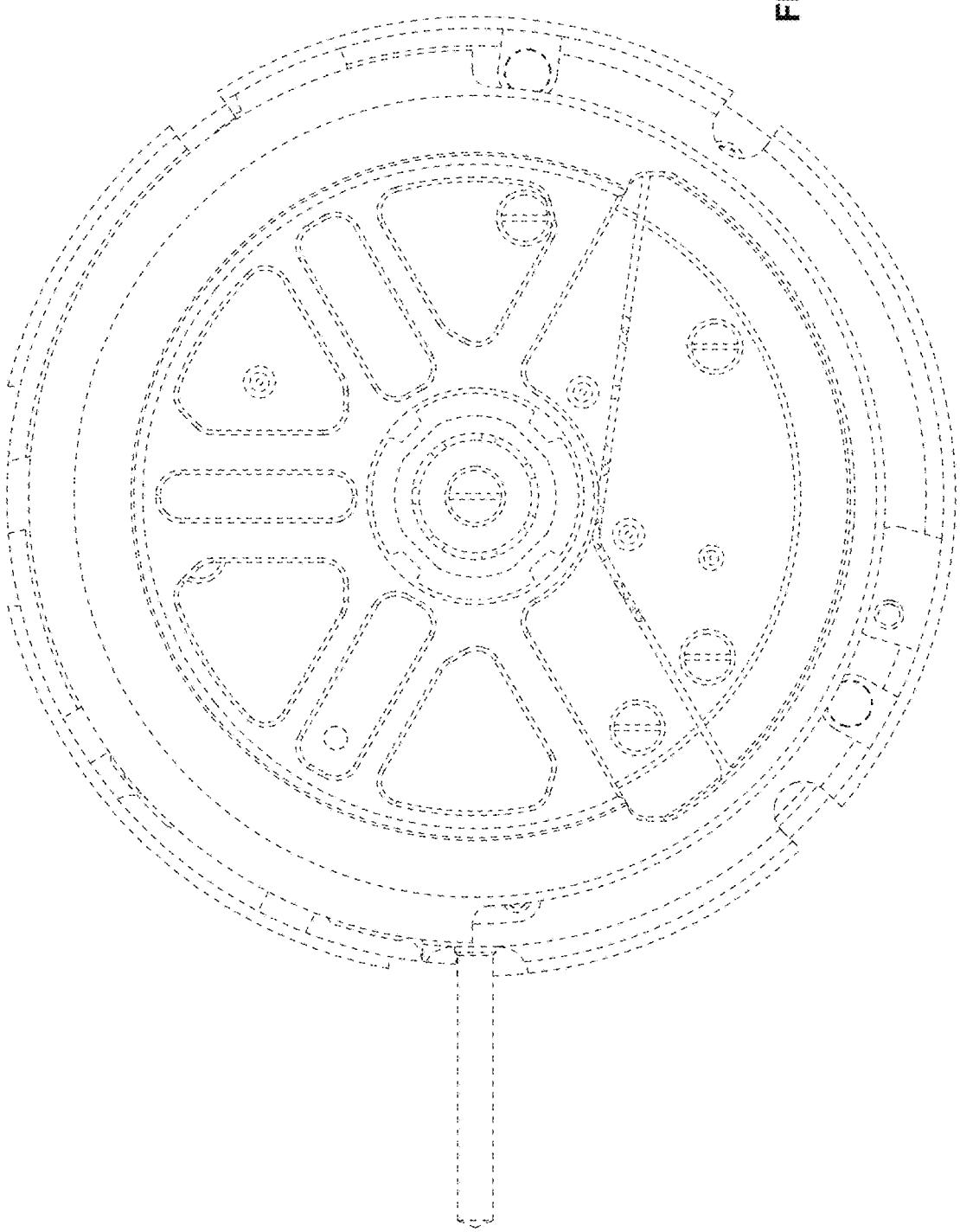

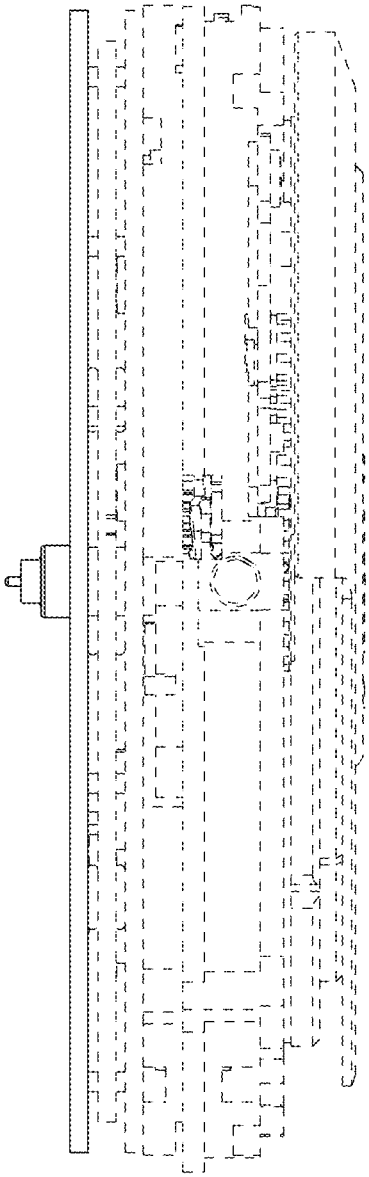

FIG. 4

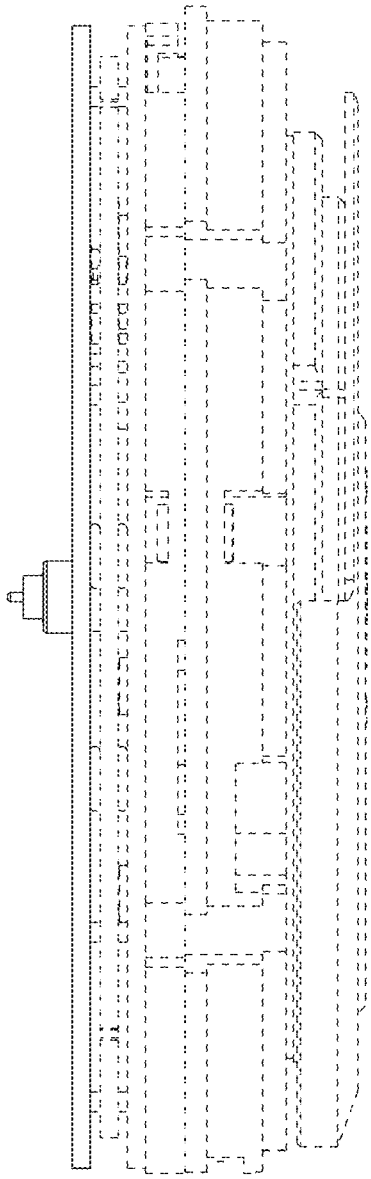

FIG. 5

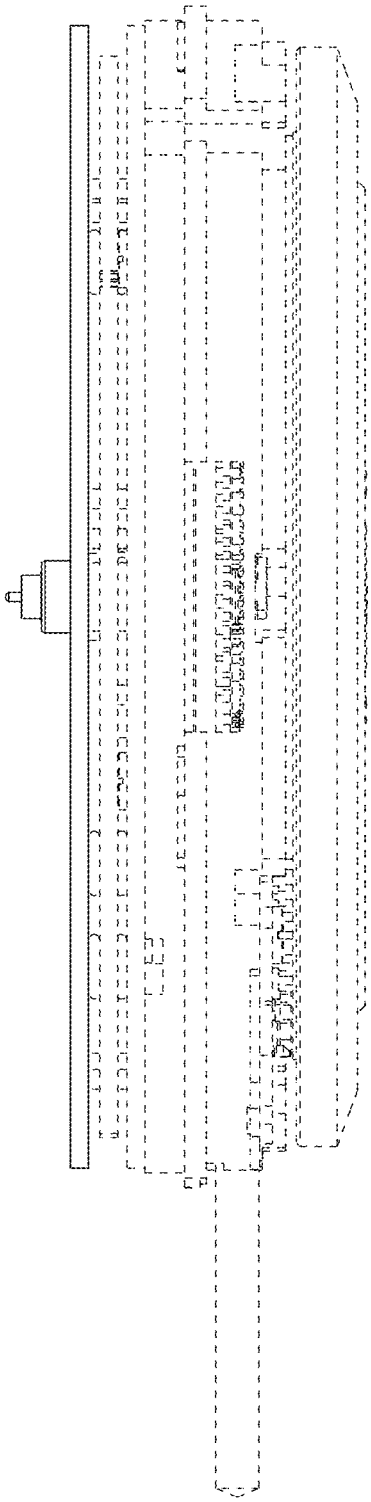

FIG. 6

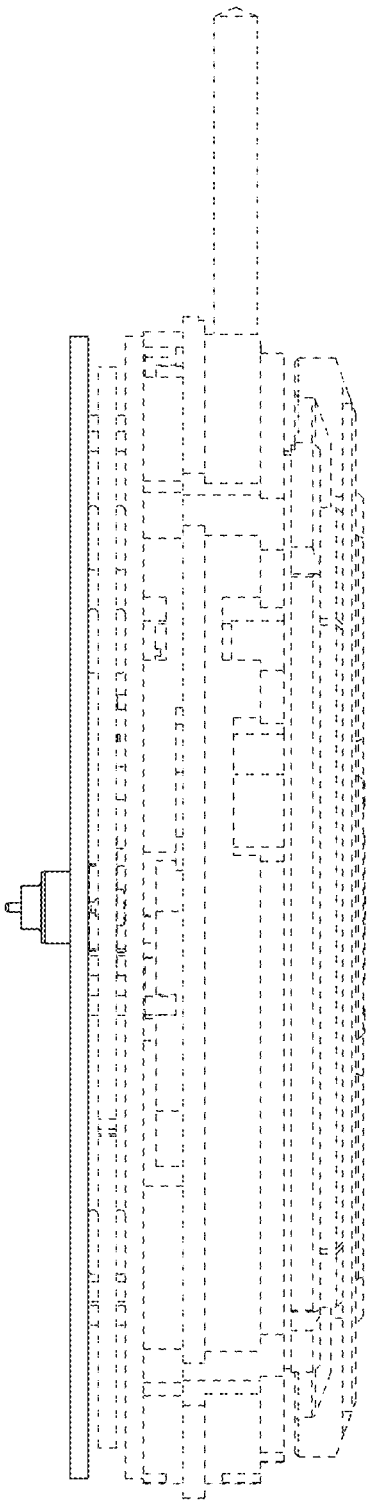

FIG. 7