PCT WORLD INTELLECTUAL PROPERTY ORGANIZATION
International Bureau

INTERNATIONAL APPLICATION PUBLISHED UNDER THE PATENT COOPERATION TREATY (PCT)

(51) International Patent Classification 6 : A61F 13/15 // 13/56 — A1

(11) International Publication Number: **WO 95/13772**

(43) International Publication Date: 26 May 1995 (26.05.95)

(21) International Application Number: PCT/SE94/01066

(22) International Filing Date: 14 November 1994 (14.11.94)

(30) Priority Data:
9303748-9 15 November 1993 (15.11.93) SE

(71) Applicant *(for all designated States except US)*: MÖLNLYCKE AB [SE/SE]; S-405 03 Göteborg (SE).

(72) Inventors; and

(75) Inventors/Applicants *(for US only)*: RÖNNBERG, Peter [SE/SE]; Rävekärrsgatan 265, S-431 33 Mölndal (SE). KLING, Robert [SE/SE]; Vävaregatan 13, S-511 63 Skene (SE).

(74) Agents: GRAUDUMS, Valdis et al.; Albihn West AB, Box 142, S-401 22 Göteborg (SE).

(81) Designated States: AM, AT, AU, BB, BG, BR, BY, CA, CH, CN, CZ, DE, DK, EE, ES, FI, GB, GE, HU, JP, KE, KG, KP, KR, KZ, LK, LR, LT, LU, LV, MD, MG, MN, MW, NL, NO, NZ, PL, PT, RO, RU, SD, SE, SI, SK, TJ, TT, UA, US, UZ, VN, European patent (AT, BE, CH, DE, DK, ES, FR, GB, GR, IE, IT, LU, MC, NL, PT, SE), OAPI patent (BF, BJ, CF, CG, CI, CM, GA, GN, ML, MR, NE, SN, TD, TG), ARIPO patent (KE, MW, SD, SZ).

Published
With international search report.

(54) Title: DISPOSABLE DIAPER HAVING ELASTICIZED LEG CUFFS

(57) Abstract

A disposable diaper (10) is disclosed in which the elastic (24) which provides elasticized leg cuffs extends along substantially the entire length of each of the longitudinal edge portions (25) of the diaper between fastening means (30, 32) on front and rear waist portions (20, 22 resp.) for fastening the diaper around a wearer.

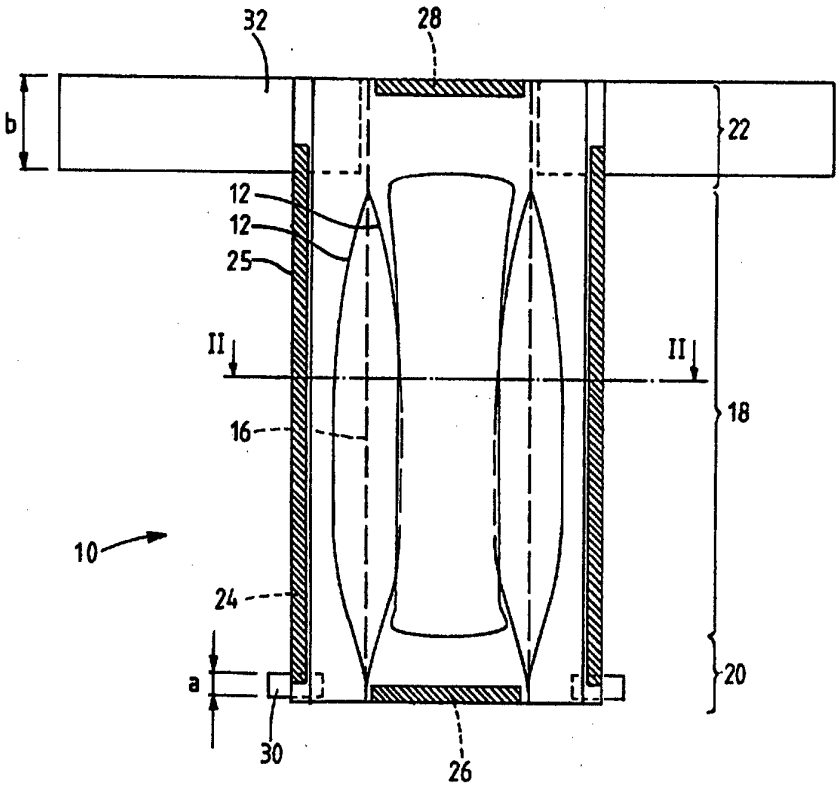

FOR THE PURPOSES OF INFORMATION ONLY

Codes used to identify States party to the PCT on the front pages of pamphlets publishing international applications under the PCT.

AT	Austria	**GB**	United Kingdom	**MR**	Mauritania
AU	Australia	**GE**	Georgia	**MW**	Malawi
BB	Barbados	**GN**	Guinea	**NE**	Niger
BE	Belgium	**GR**	Greece	**NL**	Netherlands
BF	Burkina Faso	**HU**	Hungary	**NO**	Norway
BG	Bulgaria	**IE**	Ireland	**NZ**	New Zealand
BJ	Benin	**IT**	Italy	**PL**	Poland
BR	Brazil	**JP**	Japan	**PT**	Portugal
BY	Belarus	**KE**	Kenya	**RO**	Romania
CA	Canada	**KG**	Kyrgystan	**RU**	Russian Federation
CF	Central African Republic	**KP**	Democratic People's Republic of Korea	**SD**	Sudan
CG	Congo			**SE**	Sweden
CH	Switzerland	**KR**	Republic of Korea	**SI**	Slovenia
CI	Côte d'Ivoire	**KZ**	Kazakhstan	**SK**	Slovakia
CM	Cameroon	**LI**	Liechtenstein	**SN**	Senegal
CN	China	**LK**	Sri Lanka	**TD**	Chad
CS	Czechoslovakia	**LU**	Luxembourg	**TG**	Togo
CZ	Czech Republic	**LV**	Latvia	**TJ**	Tajikistan
DE	Germany	**MC**	Monaco	**TT**	Trinidad and Tobago
DK	Denmark	**MD**	Republic of Moldova	**UA**	Ukraine
ES	Spain	**MG**	Madagascar	**US**	United States of America
FI	Finland	**ML**	Mali	**UZ**	Uzbekistan
FR	France	**MN**	Mongolia	**VN**	Viet Nam
GA	Gabon				

TITLE: Disposable diaper having elasticized leg cuffs

TECHNICAL FIELD:
The present invention relates to a disposable diaper according to the preamble of claim 1.

BACKGROUND OF THE INVENTION:
For reasons of comfort and fit, it is nowadays common to provide diapers in different sizes. For example, infants' diapers are available in a certain range of sizes including newborn, toddler, etc. For adults suffering from incontinence, due to the large disparity in the size of adults as well as the various absorption requirements placed on the diapers, a wide range of different sized diapers is required. In terms of cost-effectiveness, it is optimal to have a single size which conforms to most adults.

In order to reduce the risk of leakage, it is known to provide diapers with elasticized leg cuffs. Typical of such diapers are those disclosed in US-A-4 437 860, US-A-4 486 192 and GB-B-2 143 115. In these known diapers, the elastic ribbon in the elasticized leg cuffs extends along each longitudinal edge portion of the diaper in the vicinity of the crotch portion of the diaper. At either end of the crotch portion, wider waist portions are provided within which the elastic ribbon terminates at a distance from the longitudinal edge portion of the diaper. Fastening means such as hook-and-loop fasteners are provided at the longitudinal edge portions of the waist portions for fastening the diaper around the wearer.

SUMMARY OF THE INVENTION:

It is an object of the present invention to provide a disposable diaper which may be comfortably worn by persons of differing size.

This object is achieved in accordance with the present invention by a disposable diaper according to claim 1.

Preferred embodiments of the present invention are detailed in the dependent claims.

BRIEF DESCRIPTION OF THE DRAWINGS:

The invention will be described in greater detail in the following by way of example only and with reference to the attached drawings, in which:

Fig.1 is a plan view of an absorbent article in accordance with the present invention having elasticized leg cuffs, the article being illustrated during a stage of the manufacturing process, and

Fig. 2 is a partial sectional perspective view taken substantially along the line II-II of Fig. 1, though with the article in a finished condition.

DETAILED DESCRIPTION OF PREFERRED EMBODIMENTS:

In the drawing, an absorbent article in the form of a disposable diaper is generally denoted by reference numeral 10. For reasons of clarity, the diaper 10 is shown in Fig. 1 in a stage occupied by the diaper during its manufacture. Accordingly, reference numeral 12 denotes joining lines, for example glue lines or heat bonding lines, about which the diaper is gathered in a manner known per se to form a pair of inner cuffs 14 (Fig. 2) through which an elastic chord 16 runs. Due to the gathering of the diaper about the

joining lines 12, the diaper adopts a generally hour glass shape with a narrow centrally disposed crotch portion 18 and wider front and rear waist portions 20, 22 respectively at transverse end regions of the crotch portion.

The diaper 10 is provided with prestretched elastic means 24 disposed along longitudinal edge portions 25 of the diaper. Advantageously, the waist portions 20, 22 may be provided with transversely extending elastic means 26, 28 respectively.

To permit the diaper to be fastened around a wearer, fastening means are provided at the waist portions. As illustrated in Fig. 1, the front waist portion 20 which would normally be disposed at the front of the wearer may be provided with a pair of fastening means such as hook members 30, with each hook member 30 extending substantially perpendicularly from the longitudinal edge portion 25 of the diaper. The fastening means may further comprise a belt 32 extending substantially perpendicularly from the rear waist portion 22 which portion, during use, is normally disposed at the back of the wearer. As illustrated in Fig. 1, the belt may be in two halves, with each half extending from the opposed longitudinal edge portions 25 of the diaper. The two belt halves are intended to pass around the waist of the wearer and are fastened together at the front of the wearer by any suitable means such as a hook and loop fastener. Preferably, the belt is made from a nonwoven material which acts as a loop fastener for the hook members 30.

The structure of the diaper of Fig. 1 will be more easily understood from the partial sectional view through the crotch portion 18, as illustrated in Fig. 2. In keeping with the present invention, the diaper 10 has a generally hour glass shape and includes a facing sheet 34, a backing

sheet 36 and an absorbent core 38 sandwiched between the facing and backing sheets 34, 36 respectively. The specific components used to form the illustrated diaper may be any of the types commonly used for such purposes. For example, the facing sheet 34 may be any soft flexible liquid permeable material such as a nonwoven fibrous web having a basis weight of around 20 g/m^2. The backing sheet 36 is made from a liquid impermeable material such as a thin (for example 20μ) plastic film of polyethylene, polypropylene, polyvinylchloride or the like. The absorbent core 38 may comprise wood pulp fibres, air-laid tissue, various superabsorbent materials, etc.

As mentioned above with reference to Fig. 1, prestretched elastic means 24 are disposed along the longitudinal edge portions 25 of the diaper. As clearly shown in Fig. 2, the elastic means 24 may be in the form of an elongate elastic ribbon. The elastic ribbon is preferably relatively wide, for example between 1 and 2 cm, preferably about 1.5 cm, so as to reduce the tendency for the leg cuff to mark the wearer. The elastic ribbon may be incorporated in the diaper in any known manner, though preferably in the manner disclosed in our copending Swedish patent application with the title "Disposable diaper having elasticized leg cuffs".

In accordance with the present invention, the elastic means 24 extend along substantially the entire length of the longitudinal edge portions 25 between the fastening means on the front and rear waist portions 20, 22 respectively. This implies that when the diaper is being fastened to the wearer, a tensioning force exerted during the fastening operation on the fastening means 30 on the front waist portion 20 will directly cause the elastic means 24 to expand, thereby ensuring a tighter fit of the leg cuffs about the wearer.

To further enhance the comfort of the wearer of the diaper, it is advantageous if the fastening means 32 on the rear waist portion 22 present a relatively large engagement surface for receiving the fastening means on the front waist portion 20. Thus, the fastening means 30 on the front waist portion 20 preferably project substantially perpendicularly from the longitudinal edge portions 25 of the diaper, with the fastening means having a predetermined width a. Similarly, the fastening means 32 on the rear waist portion 22 project substantially perpendicularly from the longitudinal edge portions 25 of the diaper, with these fastening means having a predetermined width b. The percentage ratio of the width a of the fastening means 30 on the front waist portion 20 to the width b of the fastening means 32 on the rear waist portion 22 preferably lies between about 10% and about 30%, most preferably about 25%.

When the fastening means 30 on the front waist portion 20 comprise a pair of opposed hook members, their width a may be between about 15 mm and about 45 mm, preferably about 30 mm.

When the fastening means 32 on the rear waist portion 22 are a pair of opposed loop fasteners, the width b may be between about 50 mm and about 150 mm, preferably about 120 mm. Advantageously, the opposed loop fasteners are in the form of a nonwoven belt, though they may comprise regions of hook-engaging material affixed to or incorporated in the rear waist portion 22.

Thus, when the diaper is being fastened around a wearer, tension is applied to the fastening means 30 on the front waist portion 20 until the leg elastic 24 is sufficiently stretched. The fastening means 30 can then be affixed to the fastening means 32 on the rear waist portion. The

tension can be readily adjusted by moving the fastening means 30 over the width of the fastening means 32 on the rear waist portion.

The present invention is not restricted to the embodiments described above and illustrated by way of example in the drawings, but may be varied within the scope of the appended claims. It is to be understood that the term "diaper" is intended to encompass absorbent articles of the type disclosed in the appended claims which are worn by infants and adults alike. The terms "front" waist portion and "rear" waist portion denote the positioning of these portions during normal intended use of the diaper, though it is conceivable that these portions be reversed, e.g. that hook members be provided on the "rear" waist portion and loop fasteners on the "front" waist portion. It will be apparent to the skilled person that suitable fastening means other than hook and loop fasteners, e.g. releasable adhesives, may be employed

CLAIMS:

1. A disposable diaper (10) comprising an absorbent core (38) disposed between a facing sheet (34) and backing sheet (36), said diaper having a generally hour glass shape with a narrow centrally disposed crotch portion (18), a front waist portion (20) at one transverse end region of said crotch portion and a rear waist portion (22) at the other transverse end region of said crotch portion, said waist portions being wider than said crotch portion and said waist portions being provided with fastening means (30; 32) for fastening the diaper around a wearer, said diaper further comprising prestretched elastic means (24) disposed along longitudinal edge portions (25) of said diaper for providing predetermined gathered and substantially non-gathered regions along said edge portions, c h a r a c t e r i z e d i n that said elastic means (24) extend along substantially the entire length of said longitudinal edge portions (25) between said fastening means on said front and rear waist portions (20, 22).

2. The disposable diaper according to claim 1, c h a r a c t e r i z e d i n that said elastic means is an elastic ribbon.

3. The disposable diaper according to claim 1, c h a r a c t e r i z e d i n that said fastening means (30) on said front waist portion (20) project substantially perpendicularly from said longitudinal edge portions (25) of said diaper, said fastening means having a predetermined width (a).

4. The disposable diaper according to claim 1, characterized in that said fastening means (32) on said rear waist portion (22) project substantially perpendicularly from said longitudinal edge portions (25) of said diaper, said fastening means having a predetermined width (b).

5. The disposable diaper according to claim 3 and 4, characterized in that the percentage ratio of the width (a) of the fastening means (30) on said front waist portion (20) to the width (b) of the fastening means (32) on said rear waist portion (22) lies between about 10% and about 30%, preferably about 25%.

6. The disposable diaper according to claim 5, characterized in that said fastening means (30) on said front waist portion (20) are a pair of opposed hook members, the width (a) of which lies between about 15 mm and about 45 mm, preferably about 30 mm.

7. The disposable diaper according to claim 5, characterized in that said fastening means (32) on said rear waist portion (22) are a pair of opposed loop fasteners, the width (b) of which lies between about 50 mm and about 150 mm, preferably about 120 mm.

8. The disposable diaper according to claim 7, characterized in that said opposed loop fasteners are in the form of a nonwoven belt.

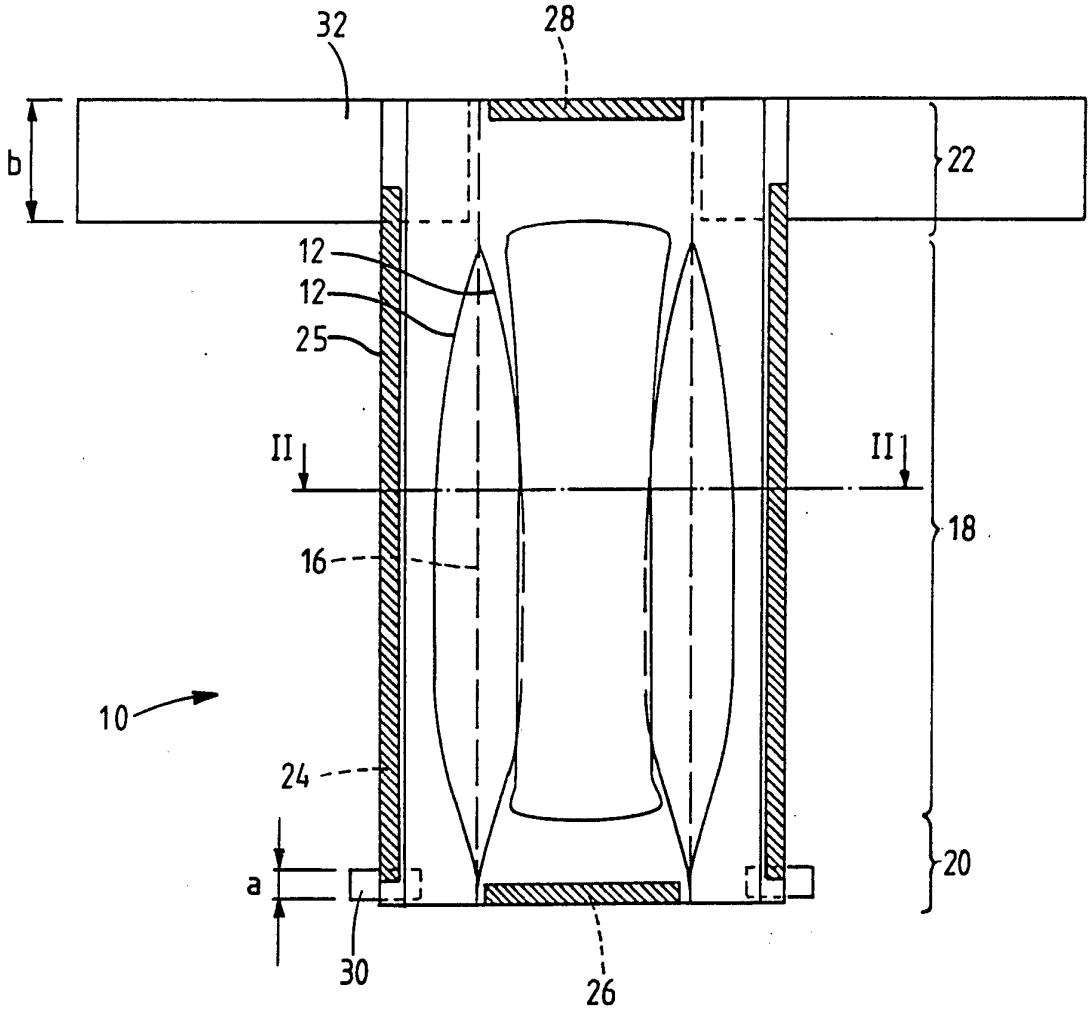

Fig.1

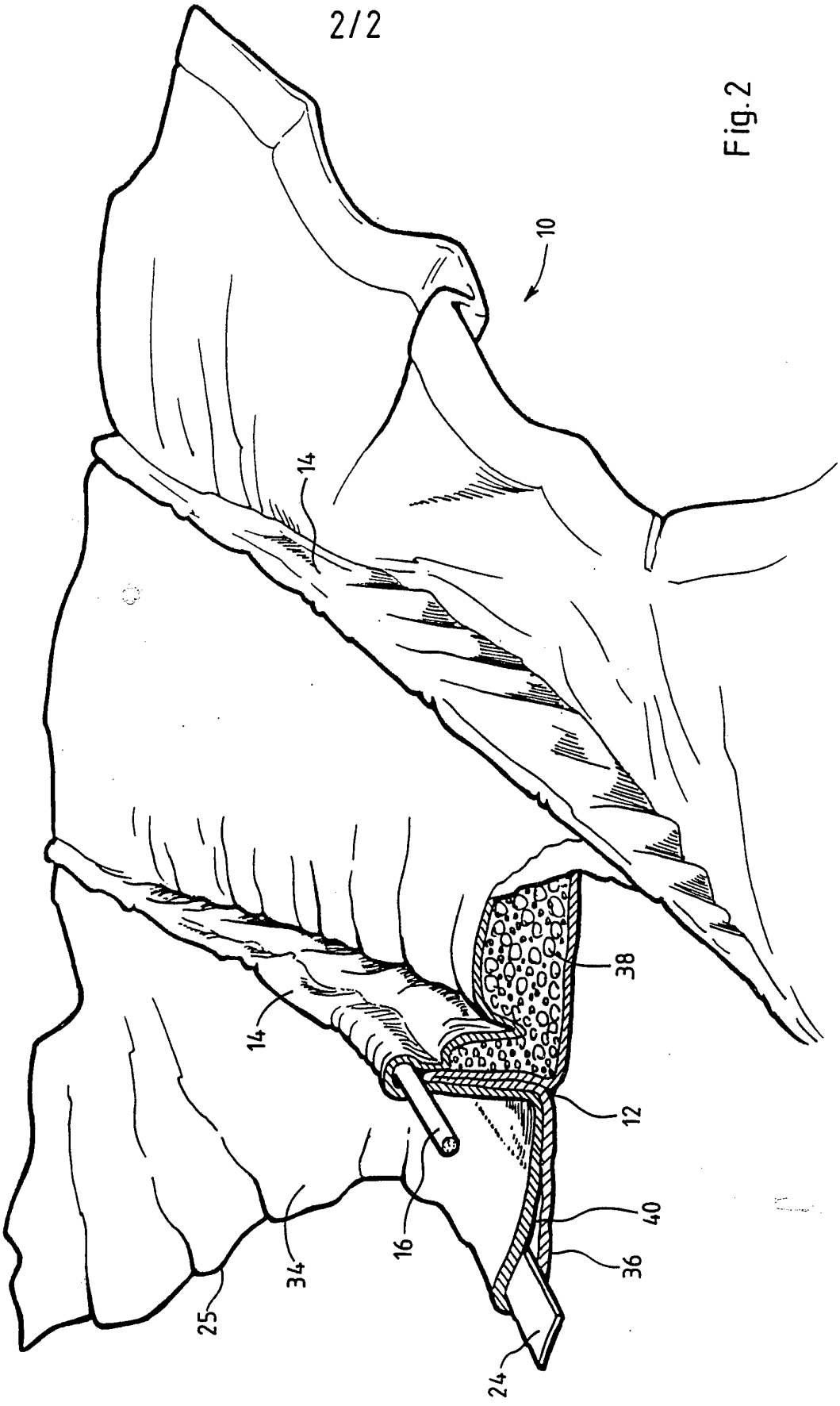

Fig.2

INTERNATIONAL SEARCH REPORT

International application No.
PCT/SE 94/01066

A. CLASSIFICATION OF SUBJECT MATTER

IPC6: A61F 13/15 // A61F 13/56
According to International Patent Classification (IPC) or to both national classification and IPC

B. FIELDS SEARCHED

Minimum documentation searched (classification system followed by classification symbols)

IPC6: A61F

Documentation searched other than minimum documentation to the extent that such documents are included in the fields searched

SE,DK,FI,NO classes as above

Electronic data base consulted during the international search (name of data base and, where practicable, search terms used)

C. DOCUMENTS CONSIDERED TO BE RELEVANT

Category*	Citation of document, with indication, where appropriate, of the relevant passages	Relevant to claim No.
X	US, A, 4050462 (LIN-SUN WOON ET AL.), 27 Sept 1977 (27.09.77), column 4, line 30 - line 34, figure 1	1-8
Y		1-8
	--	
Y	SE, B, 446939 (DUNI BILÅ AB), 20 October 1986 (20.10.86), figures 1,3	1-8
	--	
Y	GB, A, 2063677 (COLGATE-PALMOLIVE), 10 June 1981 (10.06.81), figures 1,2	1-8
	--	

[X] Further documents are listed in the continuation of Box C. [X] See patent family annex.

* Special categories of cited documents:
"A" document defining the general state of the art which is not considered to be of particular relevance
"E" erlier document but published on or after the international filing date
"L" document which may throw doubts on priority claim(s) or which is cited to establish the publication date of another citation or other special reason (as specified)
"O" document referring to an oral disclosure, use, exhibition or other means
"P" document published prior to the international filing date but later than the priority date claimed
"T" later document published after the international filing date or priority date and not in conflict with the application but cited to understand the principle or theory underlying the invention
"X" document of particular relevance: the claimed invention cannot be considered novel or cannot be considered to involve an inventive step when the document is taken alone
"Y" document of particular relevance: the claimed invention cannot be considered to involve an inventive step when the document is combined with one or more other such documents, such combination being obvious to a person skilled in the art
"&" document member of the same patent family

Date of the actual completion of the international search	Date of mailing of the international search report
20 February 1995	22 -02- 1995
Name and mailing address of the ISA/ Swedish Patent Office Box 5055, S-102 42 STOCKHOLM Facsimile No. +46 8 666 02 86	Authorized officer Ingrid Falk Telephone No. +46 8 782 25 00

INTERNATIONAL SEARCH REPORT

International application No.
PCT/SE 94/01066

C (Continuation). DOCUMENTS CONSIDERED TO BE RELEVANT

Category*	Citation of document, with indication, where appropriate, of the relevant passages	Relevant to claim No.
Y	GB, A, 2112270 (COLGATE-PALMOLIVE COMPANY), 20 July 1983 (20.07.83), figures 1,2 -- --------	1-8

INTERNATIONAL SEARCH REPORT

Information on patent family members

09/02/95

International application No.
PCT/SE 94/01066

Patent document cited in search report	Publication date	Patent family member(s)	Publication date
US-A- 4050462	27/09/77	AU-B- 498267	22/02/79
		AU-A- 2367977	05/10/78
		CA-A- 1095653	17/02/81
		DE-A- 2712069	13/10/77
		FR-A,B- 2345955	28/10/77
		GB-A- 1561021	13/02/80
		JP-C- 1395627	24/08/87
		JP-A- 52120045	08/10/77
		JP-B- 61056321	02/12/86
		NL-A- 7702759	03/10/77
SE-B- 446939	20/10/86	EP-A,B- 0229753	29/07/87
		SE-A- 8302927	25/11/84
		US-A- 4718901	12/01/88
		US-A- 4854989	08/08/89
		WO-A- 8602530	09/05/86
GB-A- 2063677	10/06/81	AU-B- 532029	15/09/83
		AU-A- 6466680	11/06/81
		BE-A- 886447	01/04/81
		CA-A- 1143506	29/03/83
		CH-A,B- 653876	31/01/86
		DE-A- 3039940	04/06/81
		FR-A,B- 2471149	19/06/81
		JP-C- 1762714	28/05/93
		JP-B- 3076941	09/12/91
		JP-A- 56091002	23/07/81
		NL-A- 8005688	01/07/81
GB-A- 2112270	20/07/83	AU-B- 559903	26/03/87
		AU-A- 9117182	16/06/83
		BE-A- 895270	07/06/83
		CA-A- 1183306	05/03/85
		CH-A,B- 658575	28/11/86
		DE-A- 3244235	18/08/83
		FR-A,B- 2517521	10/06/83
		JP-C- 1710881	11/11/92
		JP-B- 3076942	09/12/91
		JP-A- 58149304	05/09/83
		NL-A- 8204738	01/07/83
		US-A- 4643728	17/02/87