G. REMNSNIDER.

STENCIL CUTTING MACHINE.

APPLICATION FILED JULY 12, 1915.

1,164,750.

Patented Dec. 21, 1915.

2 SHEETS—SHEET 1.

Fig. 1.

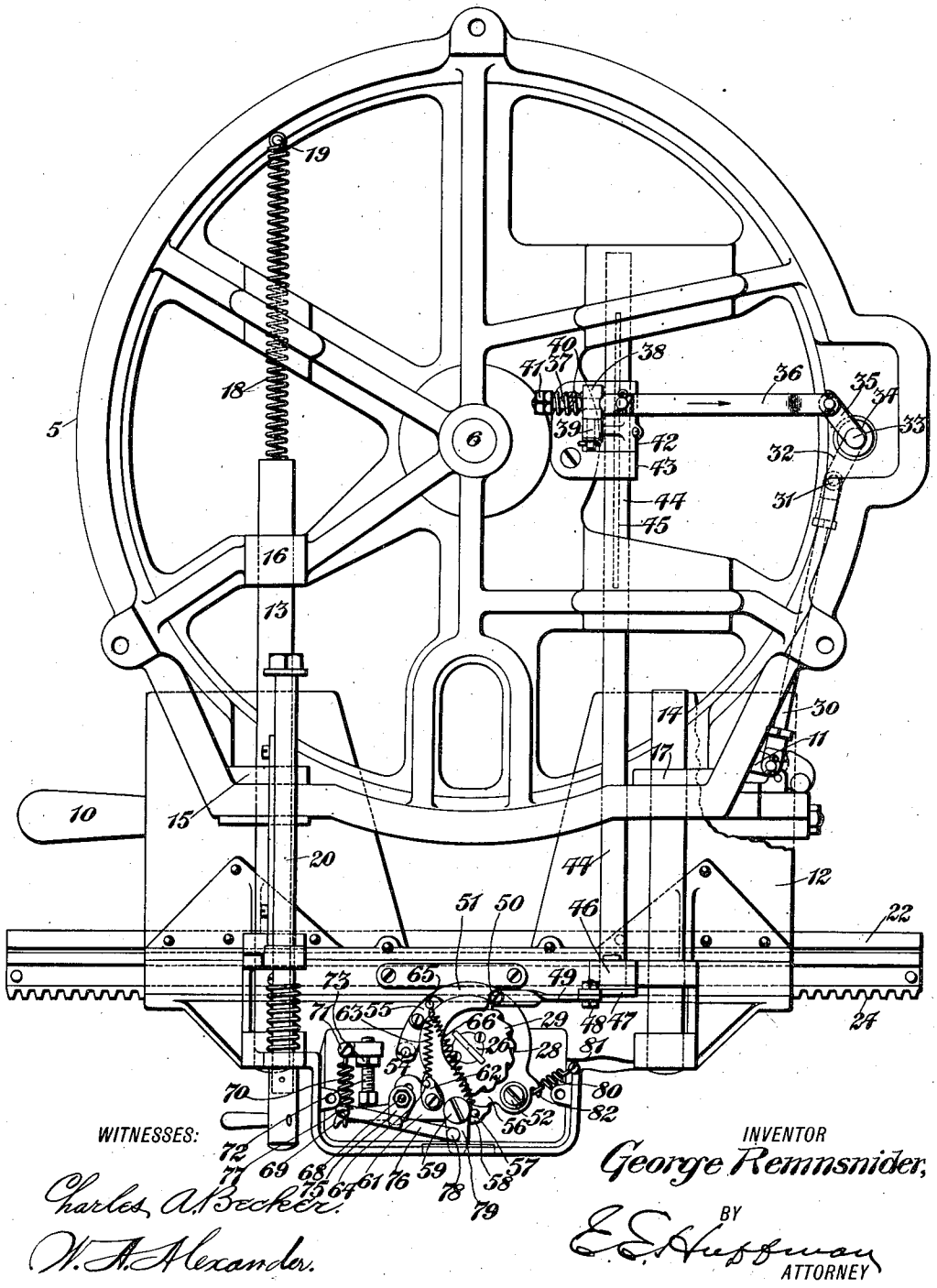

WITNESSES:

Charles A. Becker.

W. A. Alexander.

INVENTOR

George Remnsnider,

BY

E. E. Hoffman

ATTORNEY

G. REMNSNIDER.

STENCIL CUTTING MACHINE.

APPLICATION FILED JULY 12, 1915.

1,164,750.

Patented Dec. 21, 1915.

2 SHEETS—SHEET 2.

Fig. 2

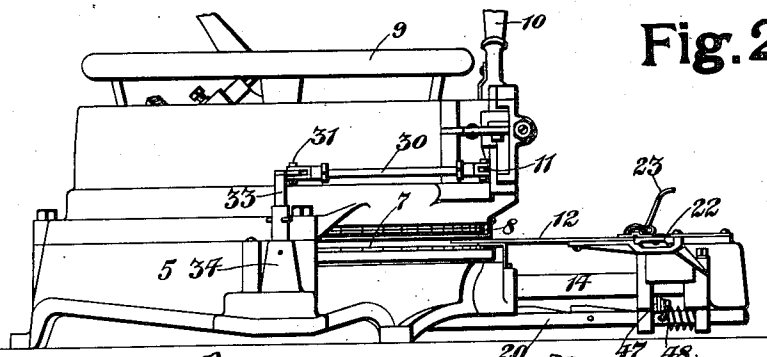

Fig. 3.

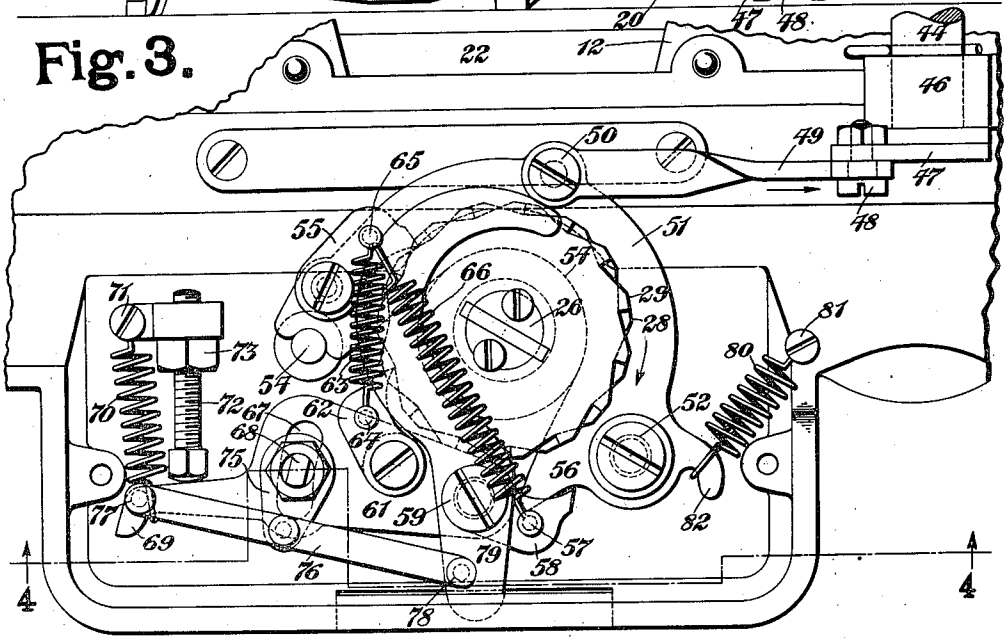

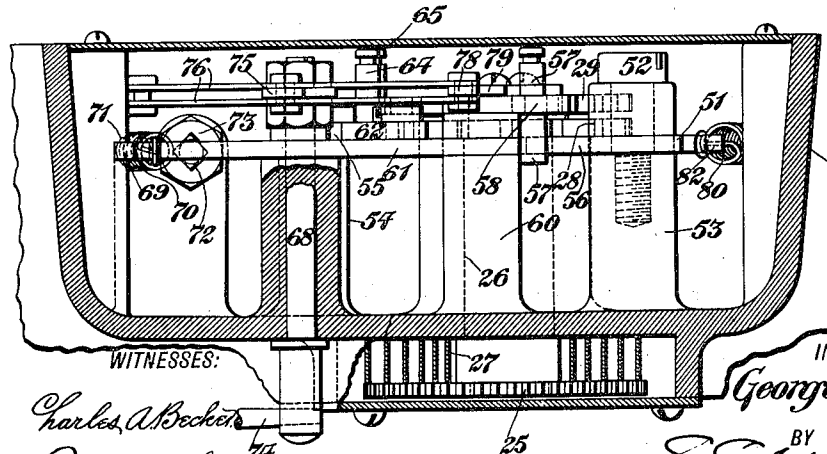

Fig. 4.

WITNESSES:

Charles A. Becker

W. K. Alexander

INVENTOR

George Remnsnider,

BY

E. E. Hufsman

ATTORNEY

UNITED STATES PATENT OFFICE.

GEORGE REMNSNIDER, OF BELLEVILLE, ILLINOIS, ASSIGNOR TO IDEAL STENCIL MACHINE COMPANY, OF BELLEVILLE, ILLINOIS, A CORPORATION OF ILLINOIS.

STENCIL-CUTTING MACHINE.

1,164,750. Specification of Letters Patent. Patented Dec. 21, 1915.

Application filed July 12, 1915. Serial No. 39,304.

To all whom it may concern:

Be it known that I, GEORGE REMNSNIDER, a citizen of the United States of America, residing at Belleville, county of St. Clair, State of Illinois, have invented a certain new and useful Stencil-Cutting Machine, of which the following is such a full, clear, and exact description as will enable any one skilled in the art to which it appertains to make and use the same, reference being had to the accompanying drawings, forming part of this specification.

My invention relates to a stencil cutting machine, but more particularly to improvements upon the stencil sheet feeding mechanism in that form of stencil cutting machine shown and described in my Patent No. 1,131,956, granted to me on March 16th, 1915.

In the accompanying drawings are illustrated one form of stencil cutting machine made in accordance with my invention.

Figure 1 is a bottom plan view, Fig. 2 is a side elevation on a reduced scale, some of the parts being broken away, Fig. 3 is an enlarged detailed view of some of the parts shown on Fig. 1 and Fig. 4 is a section taken on the line 4—4 of Fig. 3.

Like marks of reference refer to similar parts in the several views of the drawings.

5 represents the base of the machine in which is mounted the main vertical stud 6 upon which rotates the dies 7 and punches 8, which are positioned by means of a hand-wheel 9 in a manner similar to that described in my above mentioned patent and which need not, therefore, be described in detail. The punches are operated by a handle 10, which handle also operates a lever 11 from which the stencil sheet feed mechanism is actuated as hereinafter described.

12 is a carrying table, which is slidingly connected to the base 5 by means of tubular members 13 and 14. Tubular member 13 slides in bearings 15 and 16, and the tubular member 14 slides in a bearing 17, all of which bearings are formed in the base 5. A spring 18 is contained within the tubular member 13, and has its end attached to the base 5 at 19. This spring tends to draw the table 12 toward the base 5. Movement of the table 12 is regulated by a rock-shaft 20, similar to that described in my aforementioned patent.

The stencil sheet is secured to a laterally moving member 22 by means of a clamp 23. The laterally moving member 22 is provided with a rack 24, engaging with a gear wheel 25, mounted on a shaft 26, journaled in the table 12. 27 is a coil spring surrounding the upper end of the shaft 26 and adapted to move the wheel 25 in one direction. Rigidly secured to the opposite end of the shaft 26 are a pair of ratchet wheels 28 and 29 respectively.

The end of the lever 11, hereinbefore referred to, is pivoted to one end of a connecting rod 30, the opposite end of which is pivoted at 31 to an arm 32 carried upon a vertical rock-shaft 33. This vertical rock-shaft 33 is mounted in a bearing 34, formed in the base 5, and has rigidly secured to its lower end an arm 35, pivoted to one end of a link 36, the opposite end of which is provided with a pin 37, passing through a block 38, which is pivoted in the end of an arm 39. Surrounding the end of the pin 37 is a coil spring 40, the tension of which is regulated by lock nuts 41 on the end of the pin 37. The arm 39 is carried on a short bearing 42, located between the two arms of a bifurcated member 43. Passing through the bearing 42 and the arms of the bifurcated member 43 is a rock-shaft 44. This rock-shaft 44 is provided with a keyway 45, by means of which it is keyed to bearing 42, so as to be capable of longitudinal movement with respect thereto, but to be incapable of independent rotary movement. The forward end of the rock-shaft 44 is carried in a bearing 46 on the underface of the table 12, so as to move with the said table. Secured to the inner end of the shaft 44 is an arm 47 to which is pivoted at 48 one end of a link 49, the opposite end of which is pivoted at 50 to a semi-circular arm 51, pivotally mounted at 52 on a stud 53. The opposite end of the arm 51 from the stud 53 normally bears against a stop 54, as is best shown in Fig. 3 of the drawings. Pivoted to this end of the arm 51 is a pawl 55, adapted to engage with the teeth of the ratchet wheel 28 in order to move the said wheel in the direction indicated by the arrow in Fig. 3, and thus feed member 22 laterally so as to accomplish the letter spacing of the stencil sheet. The arm 51 is also provided with a tail piece 56, which nor-

mally bears upon a pin 57 in the pawl 58, pivoted by a screw 59 to a stud 60. The tail piece 56 normally holds a pawl 58 out of engagement with the ratchet wheel 29. When, however, the arm 51 is moved to feed the member 22 forward the pawl 58 is allowed to move into engagement with the wheel 29 in order to prevent the over-rotation of the shaft 26 and the consequent feeding of the member 22 to a greater extent than is desired. Pivoted to the stud 60 by means of the screw 59 is a plate 61 carrying a pawl 62 adapted to engage with the teeth of the wheel 28. This pawl is held in position by means of a spring 63 attached at one end to a pin 64 on said pawl 62, and at the other end to a pin 65 on pawl 55. A second spring 66 is attached at one end to the pin 65, and at the other to the pin 57 on the pawl 58, hereinbefore referred to. The plate 61 is provided with a slot 67, through which passes a rock-shaft 68, forming a guide for the said plate. The end of the plate 61 is provided with a hook 69, engaged with one end of the coil spring 70, the opposite end of which is secured at 71. This coil spring 70 normally holds the plate against a screw 72, forming an adjustable stop. The screw 72 is locked in position by means of a lock nut 73. The rock-shaft 68, hereinbefore referred to, is provided on its upper end with a handle 74 and on its lower end with an arm 75, pivoted to a double link 76. One end of this link is extended at 77 to form a stop, and the other end is pivoted at 78 to a curved arm 79. This curved arm is pivoted on the stud 60 by means of the screw 59, hereinbefore referred to. The curved arm is so shaped that when it is actuated by the handle 74 it will come in contact with the pin 65 so as to move the pawl 55 at the engagement with the wheel 28, and after this is accomplished come into contact with the pin 64 and move the pawl 62 out of engagement with the said wheel.

80 is a spring, attached at one end by a screw 81 to the table 12, and at the other engages with a hook 82 on the curved arm 51, so as to normally hold this arm in position, shown in Fig. 3 of the drawings.

The operation of my machine is as follows: When the handle 10 is operated to cause the punches 8 to cooperate with the dies 7, the arm 11 will be moved rearwardly, so as to impart motion through the connecting rod 30 and the arm 32 to the vertical rock-shaft 33. The movement of this rock-shaft 33 is communicated through the arm 35 to the link 36, so as to move said link in the direction indicated by the arrow in Fig. 1 on the drawings. This movement is communicated through the coil spring 40 and the arm 39, so as to rock the said arm and consequently the shaft 44. After the shaft 44 has reached the limit of its movement, the coil spring 40 will be compressed a greater or less distance, depending upon the adjustment of the lock nut 41. This additional movement of the link 36 after the shaft 44 has reached the limit of its movement insures the complete operation of the feeding device even after considerable wear has taken place. The adjustment of the tension of the spring 40 can be set so as to insure complete operation of the feeding mechanism under all conditions. The movement of the rock-shaft 44 is communicated through the arm 47 and the link 49 to the curved arm 51. This movement of the curved arm 51 causes the pawl 55 to feed the wheel 28 in the direction of the arrow in Fig. 3 thus accomplishing the letter spacing of the stencil sheet. As the wheel 28 is moved forward the pawl 58 is allowed to move into engagement with the wheel 29, so as to prevent the over-rotation of the parts. When it is desired to return the member 22 to normal position the handle 74 is operated to rock the shaft 68. The movement of the shaft 68 is communicated through the arm 75 and the link 76 to the plate 79. The movement of this plate 79 first withdraws pawl 55 from engagement with wheel 28, and afterward moves pawl 62 out of engagement with the said wheel. As soon as pawl 62 is moved out of engagement with the wheel 28 the shaft 26 is free to rotate under the tension of the coil spring 27 and return the member 22 to the position to begin a new line. If, however, the handle 74 is released before the member 22 has reached its normal position the pawls 62 and 55 will be allowed to fall back into engagement with the wheel 28, thus stopping the movement of the member 22. Inasmuch as the pawl 62 is moved out of engagement with the wheel 28 after the pawl 55 is moved out of engagement with the said wheel, it will move into engagement with said wheel before the pawl 55 and will consequently receive the shock of stopping the moving parts. It is for this reason that pawl 62 is mounted upon the plate 61, which is held in position by the spring 70. In consequence of this construction the shock received by pawl 62 is communicated to the spring 70, and is thus cushioned so as to prevent injury to the parts.

Having fully described my invention, what I claim as new and desire to secure by Letters-Patent of the United States is:

1. In a stencil cutting machine, the combination with a rotary punch and die carrying member, of a feed mechanism, a pivoted yielding plate, and a stop pawl for said feed mechanism carried by said plate.

2. In a stencil cutting machine, the combination with a rotary punch and die carrying member, of a feed mechanism therefor,

a lever pivoted at one end, a spring normally holding the other end of said lever in position, and a stop pawl for said feed mechanism pivoted to said lever at a point intermediate of its end.

3. In a stencil cutting machine, the combination with a rotary punch and die carrying member, of an operating handle therefor, of a vertical rock-shaft, operative connections between said handle and rock-shaft, a horizontal rock-shaft, connections between said shafts and feeding mechanism actuated from said second shaft.

4. In a stencil cutting machine, the combination with a rotary punch and die carrying member, of an operating handle therefor, of a vertical rock-shaft, operative connections between said handle and rock-shaft, of a horizontal rock-shaft, and yielding connections between said shafts and feeding mechanism actuated from said second shaft.

5. In a stencil cutting machine, the combination with a rotary punch and die carrying member, of an operating handle therefor, of a vertical rock-shaft, operative connections between said handle and rock-shaft, a horizontal rock-shaft, and yielding connections between said rock-shaft, said connections including an adjustable stop, and a feeding mechanism actuated from said second shaft.

6. In a stencil cutting machine, the combination with a rotary punch die carrying member, of a feed mechanism therefor provided with a ratchet wheel, a lever pivoted at one end and provided on its other with a dog engaging with said ratchet wheel, and means for actuating said lever to operate the feeding mechanism.

7. In a stencil cutting machine, the combination with a rotary punch and die carrying member, of a feed mechanism therefor provided with a ratchet wheel, a lever pivoted at one end and provided with a dog engaging with said ratchet wheel, a second ratchet wheel, and a pawl adapted to engage with the said second ratchet wheel to prevent over-rotation, said lever being provided with a tail piece controlling said pawl.

In testimony whereof, I have hereunto set my hand and affixed my seal in the presence of the two subscribing witnesses.

GEORGE REMNSNIDER. [L. S.]

Witnesses:
W. A. ALEXANDER,
M. C. HUGHES.