United States Patent [19]

Bruhn

[11] **Patent Number: Des. 284,582**

[45] **Date of Patent: ** Jul. 8, 1986**

[54] **FOUNTAIN PEN FOR ARTISTS AND CALLIGRAPHERS OR THE LIKE**

[75] Inventor: **Bernhard Bruhn**, Halstenbek, Fed. Rep. of Germany

[73] Assignee: **Koh-I-Noor Rapidograph, Inc.**, Bloomsbury, N.J.

[**] Term: **14 Years**

[21] Appl. No.: **559,283**

[22] Filed: **Dec. 8, 1983**

[30] **Foreign Application Priority Data**

Sep. 6, 1983 [DE] Fed. Rep. of Germany.... 66MR11628

[52] **U.S. Cl.** **D19/48**; D19/45

[58] **Field of Search** D19/35, 36, 41–51, D19/54–57; 401/247

[56] **References Cited**

U.S. PATENT DOCUMENTS

D. 47,473	6/1915	Reitler	D19/42
D. 48,227	11/1915	Kulow	D19/42
D. 144,474	4/1946	Winslow	D19/50
D. 162,805	4/1951	Ferber	D19/48
D. 175,864	10/1955	Steinberg	D19/48
D. 253,060	10/1979	Itoh	D19/48
D. 256,136	7/1980	Muller	D19/48
2,392,942	1/1946	Ormsby .	
2,509,234	5/1950	Kahn .	
3,666,373	5/1972	Reed	401/247

Primary Examiner—George P. Word

Attorney, Agent, or Firm—David H. Semmes; Warren E. Olsen

[57] **CLAIM**

The ornamental design for a fountain pen for artists and calligraphers or the like, as shown and described.

DESCRIPTION

FIG. **1** is a right front perspective view of a fountain pen for artists and calligraphers or the like showing my new design;

FIG. **2** is a right side elevational view, the left side being a mirror image thereof;

FIG. **3** is a front elevational view thereof;

FIG. **4** is a rear elevational view thereof; and

FIG. **5** is an exploded perspective view with the cap removed to expose the conventional nib assembly.

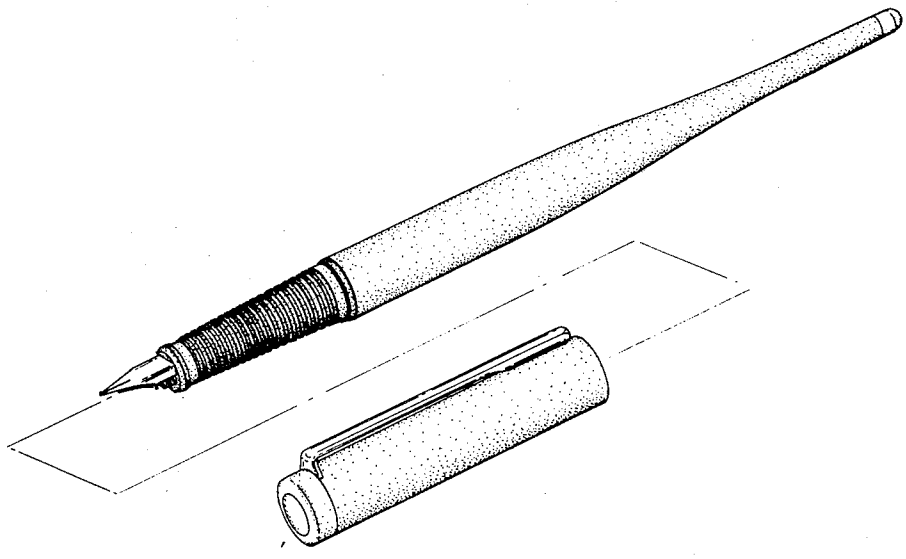

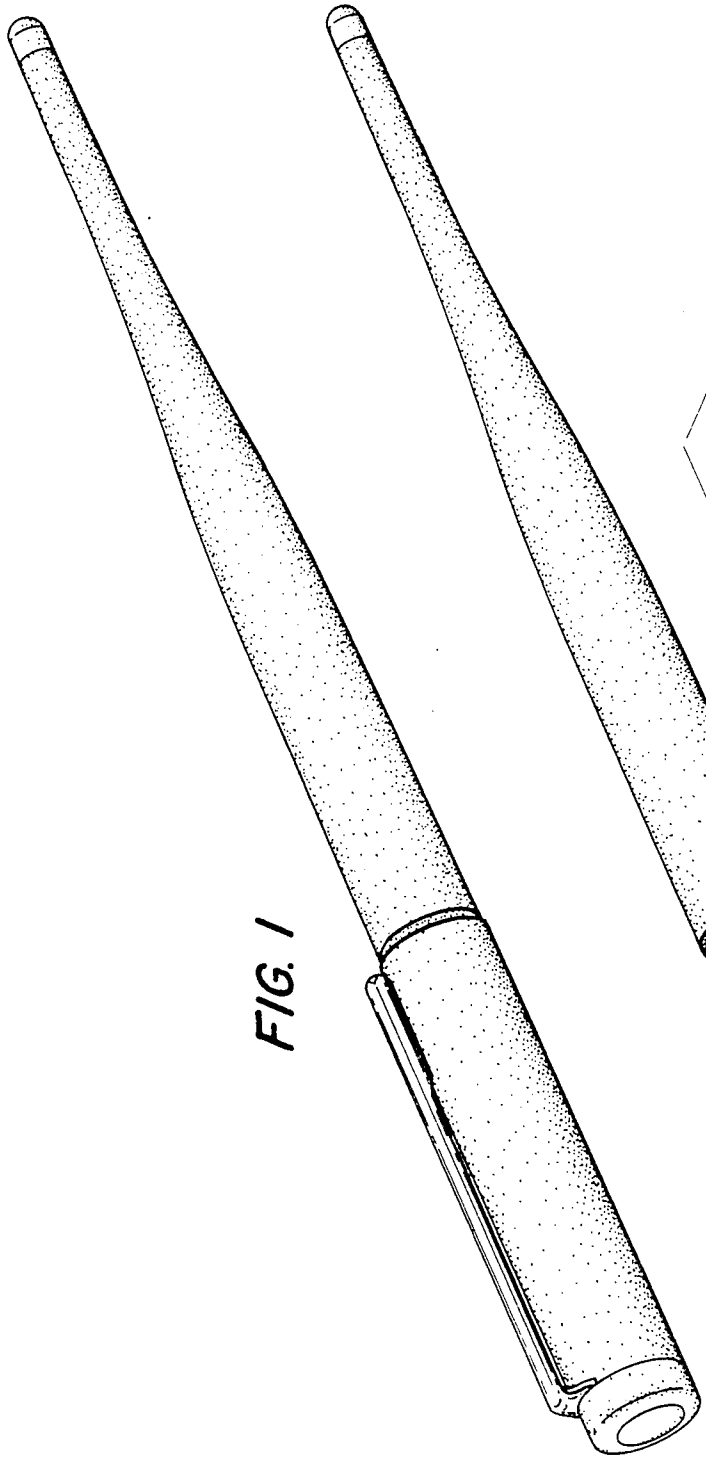

FIG. 1

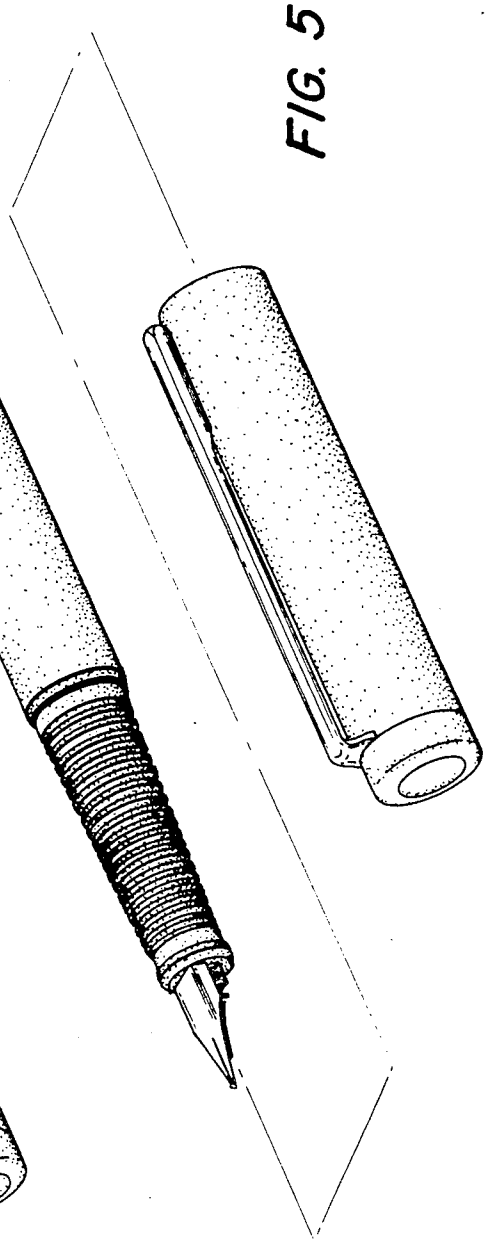

FIG. 5



FIG. 2

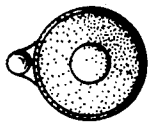

FIG. 4

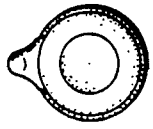

FIG. 3