J. P. SEXTON.

PROCESS OF MAKING LATH OR THE LIKE.

APPLICATION FILED MAY 12, 1919.

1,344,826. **Patented June 29, 1920.**

2 SHEETS—SHEET 1.

Fig. 1.

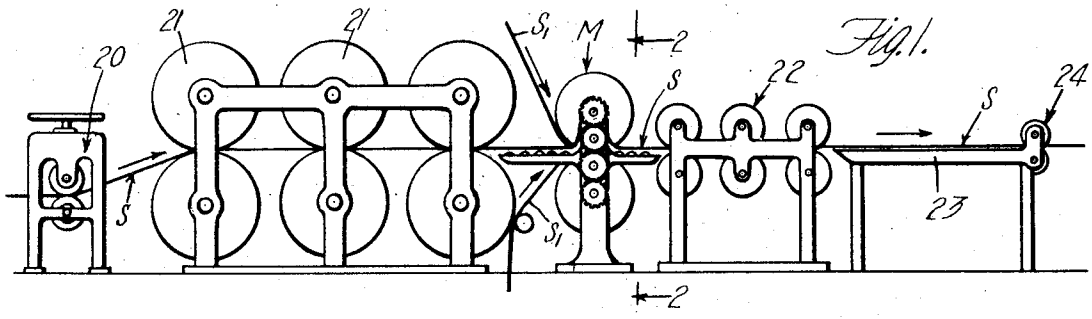

Fig. 2.

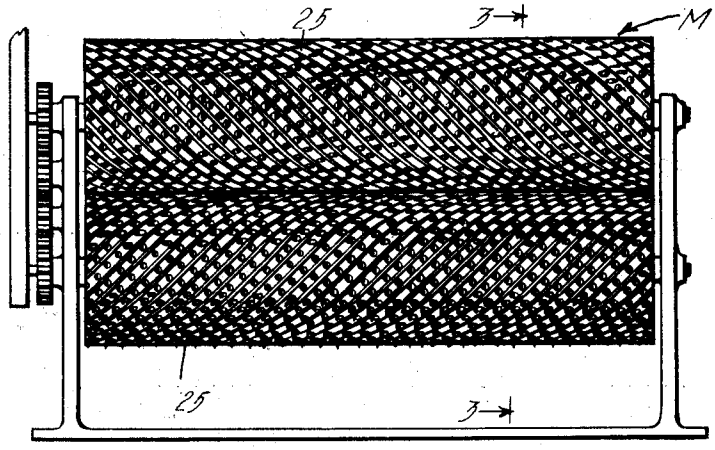

Fig. 3.

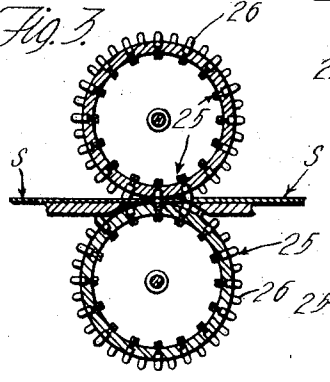

Fig. 8.

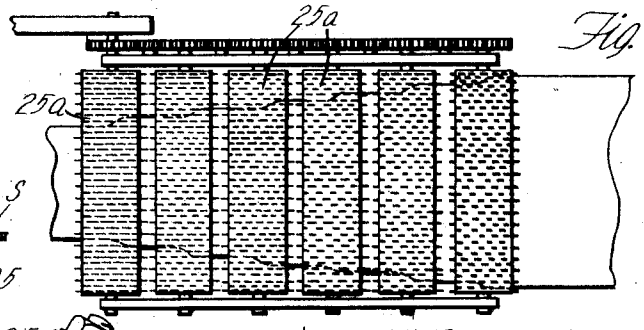

Fig. 4.

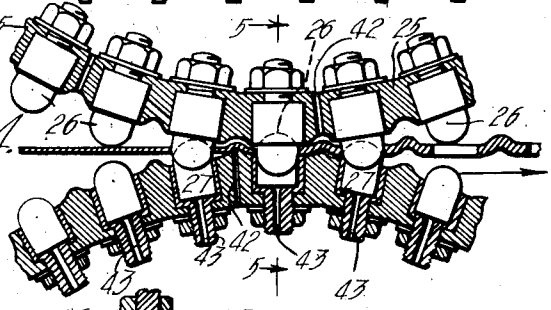

Fig. 6.

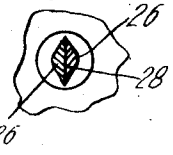

Fig. 7.

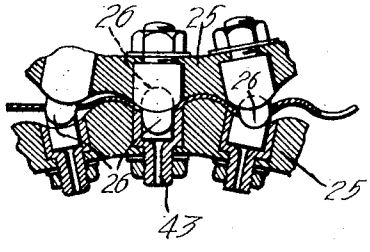

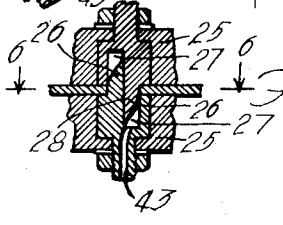

Fig. 5.

Inventor
James P. Sexton

By James T. Barkelew
his Attorney.

J. P. SEXTON.

PROCESS OF MAKING LATH OR THE LIKE.

APPLICATION FILED MAY 12, 1919.

1,344,826.

Patented June 29, 1920.

2 SHEETS—SHEET 2.

Fig. 9.

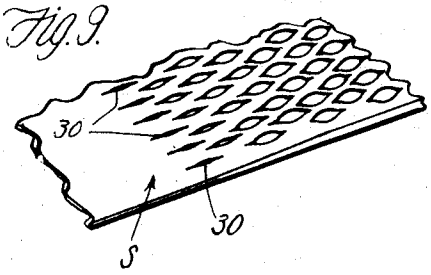

Fig. 10.

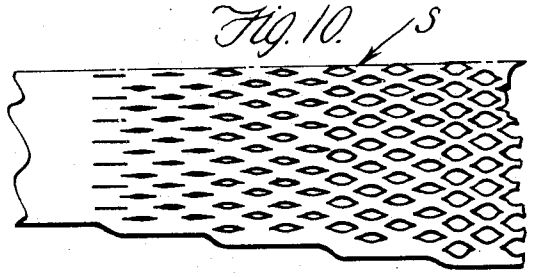

Fig. 11.



Fig. 12.



Fig. 13.

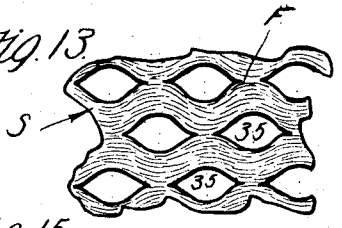

Fig. 14.

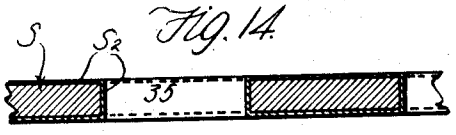

Fig. 15.

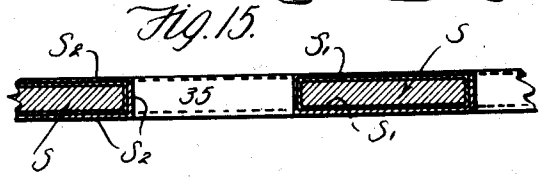

Fig. 16.

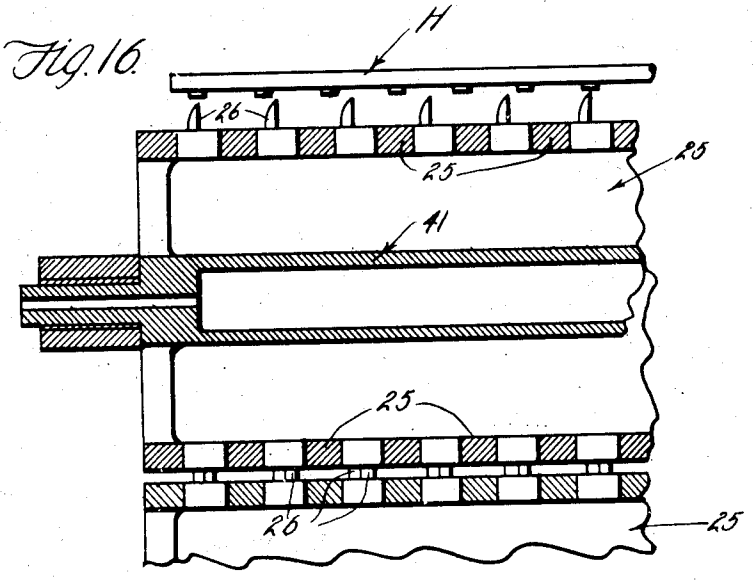

Fig. 17.

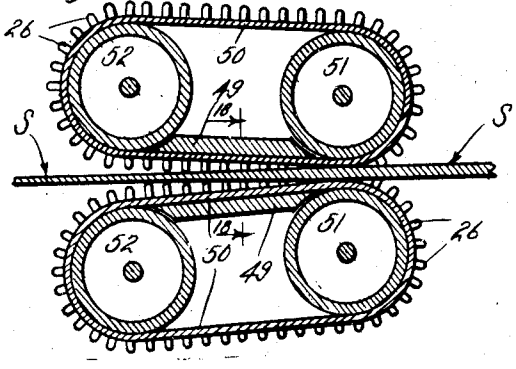

Fig. 18

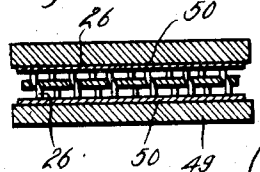

Inventor
James P. Sexton
by
his Attorney

UNITED STATES PATENT OFFICE.

JAMES P. SEXTON, OF LOS ANGELES, CALIFORNIA.

PROCESS OF MAKING LATH OR THE LIKE.

1,344,826. Specification of Letters Patent. Patented June 29, 1920.

Application filed May 12, 1919. Serial No. 296,435.

To all whom it may concern:

Be it known that I, JAMES P. SEXTON, a citizen of the United States, residing at Los Angeles, in the county of Los Angeles, State of California, have invented new and useful Improvements in Processes of Making Lath or the Like, of which the following is a specification.

This invention relates to processes and methods for the formation of lathing or other materials; and a general object of the invention is the provision of an effective, simple and economical process for the formation of a lath, or other article of the character herein described, from any plastic, ductile or workable material or from any plastic composition, such for instance as a fibrous plastic composition, such as paper stock. Although I hereinafter mention certain typical specific materials which may be effectively used in my process I do not thereby intend to limit my process to such specific materials; and although I here illustrate and describe a particular form of composition sheet or board, particularly useful as a lath (and which is the particular subject matter of the description and claims in a copending application, Serial No. 296,434, filed on even date herewith and termed composition lath) I do not thereby intend to limit this process to the particular and specific form of the article set forth. My references to particular and specific materials and to particular and specific forms and the like are merely illustrative of the invention, and such references are made for the purpose of making my invention most clearly intelligible and for the purpose of specifying my now preferred procedures.

With these general statements in view, I shall proceed immediately to a specific and detailed description of a preferred form of process, indicating simply and diagrammatically suitable and simple forms of machinery which may be used for carrying on the process. In forming a lath from composition material such as fibrous paper stock of any kind, I form a lath while the paper stock is unstable and plastic. This I do by suitable machinery arranged in conjunction and combination with any usual machinery of a paper mill, preferring to give my particular formations to the plastic sheet as a part of the process of formation of that sheet where the plastic sheet has come from the drying rolls and is still plastic or semi-plastic and before it passes to the finishing or calendering rolls. In other words, in providing machinery for my process, I may contemplate the interposition of formation mechanism between the drying rolls and the finishing rolls of any ordinary paper mill. My preferred form of composition lath embodies a sheet of such composition as I herein indicate with openings in the sheet, said openings preferably taking the form of perforations which extend clear through the sheet. I form these openings or perforations while the sheet is plastic, and by such formation I expand the plastic sheet. I may either expand the plastic sheet in width or in thickness; but I prefer to expand it in thickness as will be hereinafter specifically described; although expansion in both width and thickness may take place, as I also hereinafter specifically describe. However, I prefer to expand the sheet in thickness because by such expansion the plastic material is moved through a shorter distance than by expansion of the plastic sheet in width, and less mechanism is required for the desired compression of the sheet.

It will be seen that my process contemplates action upon a material in a plastic or workable state. Generally speaking, any material may be used which is or may be rendered plastic, ductile or workable; and in the following I shall use the word "plastic" in its broader descriptive capacity to apply to all materials which may be formed or worked in the manner that plastic compositions or ductile metals, etc., may be worked. (I hereinafter describe specifically the application of my process to workable metals.)

Furthermore, the desired plasticity or workability of the materials may be attained in different manners, and does not necessarily depend upon the material being moist. For instance, that desired condition may be made use of where it occurs in the manufacture or formation of the sheet in its ordinary or any other process of making. I have given such an instance as applied to composition sheets; and, similarly, other materials may be processed according to my invention at similar stages of their manufacture. Sheet metal may be so proc-

essed while it is heated and plastic in its formation by rolling. But the desired plasticity may be especially given a sheet of material after its complete formation. A composition sheet may be treated with suitable liquid or liquids carrying binders or other suitable solids; a metal sheet may be heated. Such procedures as these are explained more fully hereinafter; and they will typify and suggest to skilled persons other procedures which may be effectively used. However, I shall most specifically proceed with a description of the process as applied to composition material—such as a fibrous plastic material of the general class known commercially as paper stock—and without limiting my process to such material, explain particularly its excellencies in such connection.

By my process, as applied to composition, I form a composition lath which is relatively thin and light and yet has the requisite thickness and strength to give the finished wall (the lath with its applied plaster) the desired stiffness and strength. The hardness, density, imperviousness, etc., of the finished lath, either considering the whole body of the plastic composition sheet, or considering its surface only as independent of the interior parts of the body of the sheet, may be varied to suit any circumstances or any desires; but the general result is a sheet which is comparatively dense, stiff and impervious and hard, having a comparatively hard surface if desired (or, if desired having a relatively soft or furry surface, depending somewhat upon the materials used and the particulars of the finishing steps of the process). The finished sheet may then be coated with a suitable coating compound which makes the sheet perfectly waterproof and makes it practically entirely fireproof, although the sheet itself may be so processed that, without any finishing surface coating it may be a very good fire retardant and practically entirely waterproof. In fine, the result of my process may be such a composition lath as is set forth in my said co-pending application; and the lath itself will need no further particular description here except as is necessary to clearly set forth the process of formation. This process of formation will be most readily understood upon a functional description of a simple typical form of machinery which may be used for carrying on the process.

However, as I have hereinbefore indicated, the process is not at all limited to such machinery, and, as a matter of fact, the process may be even carried out by hand, or by hand with the aid of very simple tools and appliances.

For the purpose of thus describing my process I now refer to the accompanying drawings wherein I have shown, more or less diagrammatically, a simple arrangement of machinery, and in which drawings—

Figure 1 is a side elevation showing the typical combination of machinery for carrying on my process; Fig. 2 is an elevation showing the lath forming rolls, said Fig. 2 being enlarged and taken as indicated by line 2—2 on Fig. 1; Fig. 3 is a cross section taken as indicated by line 3—3 on Fig. 2; Fig. 4 is an enlargement of portions of the section shown in Fig. 3, indicating the interacting peripheral portion of the forming rolls and indicating the plastic sheet as it passes through the rolls; Fig. 5 is a detail section taken as indicated by line 5—5, on Fig. 4; Fig. 6 is a detail section taken as indicated by lines 6—6 on Fig. 5; Fig. 7 is a section similar to Fig. 4 showing a modified form of roll for position of a corrugated sheet rather than a ribbed sheet; Fig. 8 is a plan showing the arrangement of several successive rolls where the formation of a lath by lateral expansion than by expansion and thickness; Fig. 9 is a fragmentary perspective showing a portion of the plastic sheet as it appears in process of formation according to the procedure of expansion and thickness; Fig. 10 is a fragmentary plan showing a portion of the plastic sheet as it appears in process of formation, according to the procedure of expansion in width; Figs. 11 and 12 are sections similar to that of Fig. 6, indicating typical aperture forming teeth on the rolls of Fig. 8; Fig. 13 is a fragmentary plan showing a finished lath and indicating the position of the fibers around the openings therein; Figs. 14 and 15 are enlarged sections showing the finished lath; Fig. 16 is a detail section showing how a forming roll may be heated for working in metal; and Figs. 17 and 18 are illustrations of a modified mechanism for my formation process, Fig. 18 being a detail section taken on line 18—18 of Fig. 17.

In the drawings I illustrate at 20 a set of pressure rolls through which the plastic pulp sheet passes from the preceding process machinery of any ordinary paper mills and from which the pulp sheet then passes to the drying rolls 21. It will be understood that the composition of which my lath is made is run through the beating engine and other ordinary machinery of a paper mill, to pulp the material and to intimately mix it; and then the pulp is handled in the method ordinary to paper manufacture to form a sheet of the plastic pulp, which sheet is passed through the various mechanisms of the ordinary or usual paper mill and then to the drying rolls 21. Now, although I illustrate my own specific mechanism as being in a position to act upon the pulp sheet after it has passed through the drying rolls, it will be readily understood that the proc-

ess is not limited to this particular place or position of my specific mechanism. It is only essential in my process that the action of formation takes places upon the sheet while it is still plastic or semi-plastic. This condition usually obtains after passage through the drying rolls and before passage through the finishing or calendering rolls.

Thus the sheet, indicated at S, passes from the drying rolls to my specific mechanism M, where the last formation is given to the sheet, and then the sheet S may pass to the calendering rolls 22 where the sheet may be finished, either by hot or cold pressing, or both. However, the sheet may be so treated and be of such materials, etc., that it will set and take the required density, etc., by action of the mechanism M, and thus require no calendering or other pressing for its final finishing. The sheet may pass onto any suitable table or conveyer or other supporting means as is indicted at 23, and may be finally cut into suitable length by a cutter indicated at 24.

Any fibrous plastic material, or any plastic material of the general nature herein stated and capable of being subjected to this process, may be used for the formation of this composition lath. However, I prefer the fibrous material of the general character known as paper stock, and generally I may use any such material that will pulp in a beating engine, such as waste paper stock, wood or vegetable fibers; waste cloth or rags or straw or the like. In other words, I may specifically use any paper stock material, using a suitable stock and using suitable methods and procedures, as well known in the paper art, for the production of a final finished sheet of whatever characteristic may be desired.

For instance, by variation of the stock, or by variation of mixtures of ingredients of the stock, and by variation in particular procedures during the formation and finishing of the sheet, I may make my finished composition lath either relatively hard or relatively soft, dense or porous, with a hard finish or with a soft-furry finish, relatively absorbent of water or relatively impervious to water, and of relatively great stiffness and strength, or otherwise. However, for the purposes herein described, I prefer to make the finished sheet relatively hard and dense so that it will have the desired stiffness and strength without, however, being overly brittle and liable to break. I also prefer to give the finished sheet a hard impervious and smooth surface. It will be readily recognized that of course these characteristics may be readily obtained by the use of well known paper stock and by well known procedures common in the paper making art; but I have found certain compositions which lend themselves very readily to the making of my composition lath, to give the finished lath those qualities which I desire. Without limiting my procedure to any such specific compositions or mixture, I shall here describe preferred compositions which I have found very efficient.

For instance, using any of the ordinary fibrous pulp materials, I may mix with that material an insoluble soap compound composed of a drying oil, such as boiled linseed oil, and burnt lime, or whiting, or calcined magnesia, or any of the various mineral materials which will saponify the oil. The oil and lime or other ingredients are brought together in a suitable mixer and are brought to a thin creamy consistency and then poured into the beating engine with the material to be pulped, where it is thoroughly mixed with the pulp while the pulp is beaten. Naphtha, kerosene, or any of the cheap oil adulterants may be used for thinning the oil compound, or soap. I have found in practice that bringing the soap compound to the boiling point before adding it to the pulp causes the finished product to solidify and densify and dry more rapidly. This compound produces a hard, stiff and strong, dense and impervious sheet.

More inexpensive, and at the same time excellent results, may be obtained by beating the fibrous material to a pulp with water in the usual way for paper making, adding burnt lime or cement to the pulp during the beating process, then adding soluble glass of a solution enough that when diluted with the water contained in the pulp it will have a strength of from fifteen per cent. to sixty per cent. or so, according to the strength desired for the finished product. I have also found that a cheap grade of glue to which has been added one-fiftieth part by weight bichromate of potash added to the beaten pulp in proportions according to the strength desired for the finished product gives very good results and produces also a waterproof sheet.

Any of the compositions herein specified produce, when passed through the process herein described, a dense, hard and impervious sheet having very great stiffness and strength, even in a thin sheet. Final calendering or pressing is not necessary to produce these results; with a proper composition the pressure of formation is sufficient to densify the material and form a smooth hard surface, and the sheets need only then be dried.

The plastic or semi-plastic sheet S comes to my forming mechanism M in such a state that openings or perforations may be formed in or through it by a process of spreading apart the fibers of the sheet rather than by punching out or removing portions. There may be two opposing rolls 25 each equipped with teeth 26 arranged in such a

way that a tooth on one roll is adapted to roll into sidewise registering relation with a tooth on the other roll, each tooth entering a recess 27 alongside the other tooth. The recesses may have discharge openings 43 to discharge material which might otherwise clog them. The teeth have flat opposing surfaces at 28 where they come together; and the recesses 27 are located immediately adjacent the teeth on the side of their flat surfaces. This is all illustrated in Figs. 4, 5 and 6. The section of the teeth at their bases is such as is illustrated in Fig. 6; but the outer edges of the teeth, which are rounded as is shown in Fig. 4, are thin and practically knife edges. These knife edges come together, as will be well understood from inspection of Figs. 4, 5 and 6, in shearing relation, and they first form a mere longitudinal slit in the paper. The two teeth at the left in Fig. 4 are shown just coming into the slitting relation and just about ready to form a slit through the paper. This slit, shown at 30 in Fig. 9, is longitudinal of the sheet S and of course longitudinal of the general line of the fibers in the sheet. The fibers generally extend longitudinally of the sheet, the process of sheet formation through which they have been previously put, causing them to lie generally in this direction. Consequently, the formation of the slit at 30 does not cut the fibers but separates them. It will be readily understood, without further detailed description, how the teeth 26, as they come on around to the position shown in the center of Fig. 4, gradually expand the initial slit until the opening through the sheet is of the same shape as the combined cross sections of the two teeth 26, as is shown in Fig. 6, the shape of the opening of the finished sheet being shown in Fig. 13. I wish particularly to emphasize the fact that the initial slitting and the opening of the slits is all one single continuous operation, a slit being opened and then immediately gradually widened out. This action is accomplished by the gradual bringing together of the opposing teeth, and it will be apparent that this action can be accomplished by machinery other than rolling cylinders. Any such machinery not only gradually brings the teeth together and gradually expands the slits, but also puts pressure on the sheet.

Now the amount of spreading due to the opening of the perforations through the sheet, is, in the average case, enough to about double the width of the sheet if the sheet were allowed to expand in width; and this I may allow it to do, as I hereinafter describe. But I prefer to make the sheet expand in thickness. This expansion in thickness will be readily understood as flowing from the opening of the perforations, the rolls 25 being spaced wide enough apart to allow the sheet to expand in thickness, and the peripheries of the rolls then pressing upon the thickened sheet, and giving to the sheet any desired surface configuration, either flat or with corrugations or beads, etc., as is desired.

In Fig. 2 I illustrate an arrangement of rolls with spiral grooves and beads to form spiral hollow beads or ribs on the finished sheet as will well be understood from an inspection of Figs. 2 and 4. The teeth on the rolls are also arranged in spiral line, so that the finished sheet has its perforations arranged in staggered relation, or on crossed diagonal lines, as is indicated in Fig. 13. Fig. 7 indicates a variation in the form of the rolls, to give the sheet a corrugation rather than a mere system of beading or ribbing.

In Figs. 8 and 10 I illustrate how the sheet may be expanded in width rather than in thickness. This may be accomplished in many different manners; but as a typical instance, I illustrate in Fig. 8 perforating mechanism which comprises a series of rolls 25^a, in contact with which the plastic sheet successively passes. The first pair of these rolls may have teeth 26^a which make the initial slit in the paper; the next pair may have teeth which are a little bit bigger and widen out the slit to a certain amount, and so on. The shape of teeth on some succeeding roll is shown at 26^b in Fig. 12. It will be readily understood how the teeth on succeeding pairs of rolls may be wider than on the preceding pair of rolls, so that the slit will be gradually opened out. Now the sets of rolls in Fig. 8 will all be set at the same spacing, being a spacing only wide enough to pass the sheet in its initial thickness. The sheet is thus forced to spread laterally, keeping its initial thickness. For this method of procedure I of course make the sheet originally of the thickness finally desired; whereas in the method which involves expansion and thickness, I originally make the sheet, say, only half the thickness finally desired. These matters are more fully spoken of hereafter.

Whatever method of perforation and expansion may be used, so long as the perforations are spread rather than punched, it will be noted that the fibers are merely spread apart and are not cut. Thus the final sheet has its fibers extending around the apertures 35, as is indicated at F in Fig 13. The fibers do not extend up to an aperture and there stop short, but they extend around the apertures, peripherally, without being cut off. Thus the fibers extend, collectively, continuously through the sheet from end to end, just as they would extend in a plain unperforated sheet of paper, except of course that the fibers here extend sinuously around

the peripheries of the openings. The result of this particular feature of my process is that the sheet is exceptionally strong, not only as to longitudinal tensile strength, but also as to stiffness to resist transverse bending.

After the formation of the sheet is completed in the manners herein generally described, then the sheet may be passed to the finishing or calendering rolls, or the sheet may be finished in any suitable manner, causing the fibrous plastic substance to finally set and dry. It may be cut into suitable lengths either before or after the finishing process; or the finishing process may be one which gives the hard calendered surface to the sheet, or further densifies the sheet as a whole, with or without completely drying it; and the cut sheet may then be dried in any suitable manner. For instance, they may be stacked up in piles for their final curing and drying.

At any time after the sheet has been solidified and either primarily or finally dried, it may be coated, as by dipping, with a suitable liquid which will form an exterior coating or film S^2. Asphalt thinned with naphtha or kerosene, or any suitable oil, with the addition of a small amount of japan to make the liquid set quickly, may be used for this purpose. Such an asphalt film makes the sheet absolutely waterproof. On the other hand, such a liquid cement as a solution of silicate of soda and lime will make a very good coating, forming a dense, hard and smooth surface which is waterproof and adds very greatly to the fire resisting qualities of the sheet.

Any such finishing film or coating may be added to the sheet; and it is a general objective of such a film that it provides a hard smooth surface for the sheet, makes the sheet perfectly waterproof, and adds to its fire-resisting qualities; and at the same time adds to the strength of the sheet because such a film has in itself a certain amount of tensile strength. This is particularly true of such films formed in the specific manner herein described. This coating or film is shown at S^2 in Figs. 14 and 15. It will be seen that it covers the entire superficial surface of the sheet.

Also in Fig. 15 I have shown a lath which, on each side of the body of the sheet S, has a facing sheet S^1. These facing sheets S^1 may be provided, for instance, by feeding the sheets S^1 between the forming rolls, in some such manner as is indicated in Fig. 1, these sheets S^1 then coming into direct contact with the upper and lower faces of plastic sheet S. These sheets S^1 may be thin sheets of previously formed paper of any suitable composition. By coming into contact with the plastic sheet S they themselves become plastic or semi-plastic by reason of the moisture absorbed; and then, by the action of the forming rolls, these sheets are also split and the perforations opened up, and by the pressure action of these rolls and of the finishing or calendering the rolls or the like, these sheets, while in their semi-plastic state, are incorporated with the body of the sheet S; so that, to all intents and purposes, the facing sheet and the body sheet S in fact become one sheet. The use of such a facing sheet on one or both surfaces of the body sheet S may be desirable in some instances; as for instance where it is desired to form the body sheet of a material which would have a tendency to adhere to the rolls, or other material which might be more or less difficult to handle unless it was confined between one or two facing sheets.

I have now described with some detail specific methods of formation as applied to a fibrous or similar plastic material which is processed during its manufacture. Any such material may be put through my process even after the sheet has been initially made and formed. For instance, I may apply my process to "fiber." Sheets of fiber lend themselves very readily to my forming process either in the final stages of their completion and just before drying or after they have become a finished product. In the latter case the finished sheets or parts can be saturated with water until they are softened sufficiently to stand expansion and contraction without fracturing. They then of course can be subjected to my process.

Or I may saturate a previously formed or finished sheet of any suitable material with any of the before mentioned liquid binders, or other ingredients suitable for the purpose; either by immersion or by forcing the binder or liquid, either hot or cold, into the pores of the sheet by means of pressure. I have found in practice that I can satisfactorily impregnate such a sheet as finished chip board or wool felt or any suitable paper sheet by forcing the binders or liquids into the pores of the finished sheet by two specifically different methods. I may force or blow a dry mineral or other binder into the pores and interstices from one or both sides of the sheet by means of compressed air and then I may pass the sheet through a bath containing the liquid portion of the binder which then saturates the mineral or pigment portion of the binder previously forced into the pores and interstices. I thereby change the originally dry and finished sheet into a fibrous plastic or semi-plastic sheet suitable for formation by my process. This particular procedure has the advantage of allowing the use of an extremely rapidly setting or drying binder if so desired; as it will be readily understood that this process of combining the

liquid with the pigment portion of the binder may take place very shortly before or almost on the instant of the sheet's entrance between the forming rolls. Thus a liquid and binder may be used which would only keep the sheet plastic for a very short time—only long enough to allow the forming process to take place.

And this feature of this particular procedure brings out another feature which is more or less common to all of my procedures. That is, generally, in my process, I employ with the fibrous plastic sheet or the like, a liquid or a liquid binder which has the capacity of making the sheet plastic and keeping it plastic during the process of formation and then has the capacity to cause the sheet to set and solidify and become dense. This is true whether or not the sheet is finally calendered or otherwise pressed to densify it and give it a finished surface. The process may, as applied to such sheets, become substantially the making of the material plastic by adding to it or combining with it a certain liquid binder, then forming the material as described, at the same time pressing and solidifying the material during the process of formation, and then merely allowing the formed material to set and harden and dry.

Or (again to take up the specific description of how a previously finished sheet may be again rendered plastic), I may take a sheet of soft chip board or any suitable paper sheet and force the binding element in liquid form, containing both pigment and liquid, into the pores and around the fibers of the sheet by means of compressed air applied in a spraying nozzle. This can be applied to one or both sides of a moving or stationary sheet, thereby causing a thorough saturation or a saturation which will bring the sheet to any desired state of plasticity before entering the forming rolls. Or a thorough saturation may be given and the surplus may be squeezed out by pressing rolls, with or without the aid of drying or calendering rolls, just before entering the forming rolls.

By such specific methods as I herein describe, sheets of fibrous plastic material may be formed and made ready in advance and then used for the making of lath or the like.

I have hereinbefore stated that my process is not necessarily limited to such material as fibrous plastics, but, broadly speaking, may be applied to any material capable of plastic working. For instance, it will be readily understood, without any great detail of explanation, how my process may be applied to heated metal sheets. Such metal sheets may be formed in substantially the same manner as hereinbefore described, such formation taking place either while the metal sheets are heated during their ordinary course of formation by rolling; or finished metal sheets may be subsequently heated specifically for the purpose of my formation process. In my formation process, as applied to metal sheets as well as to sheets of any other plastic nature, it will be seen that the openings or perforations are formed by process of lateral displacement of the metal or other plastic material rather than by the common and well known process of pulling a slitted metal sheet out in width. The common process of expanding metal sheets to form lath embodies an initial slitting of the sheet and a subsequent lateral pulling out of the sheet to expand the slits and to expand the sheet as a whole in width. My process may be readily seen to differ distinctively from this common expanding process in that my process displaces the material from the opening into the webs at each side of the opening, causing these webs, in my preferred form of process, to be built up in thickness as the displacement proceeds. This displacement is gradual and is an immediate continuation of the operation of slitting, and is accomplished by a pressure operation rather than a pulling operation. All distortion, bending, weakening, crystallization, etc., of the metal is obviated. The amount by which the webs are increased in thickness by this lateral displacement of material depends of course upon the amount of material thus displaced into webs and also upon the thickness for which the forming rolls are set. The forming rolls are preferably set close enough together to put a suitable superficial pressure upon the surface of the formed thickened sheet to give the sheet a smooth even surface and bring it to uniform thickness throughout and to compress and densify the sheet. This pressure may be comparatively large and, with the forming rolls set at a given distance apart, is caused by the lateral displacement of the material into the webs. Thus this pressure can be regulated by regulating the thickness of the sheet which is fed into the forming rolls.

In considering expansion of the sheet in thickness, it must be of course borne in mind that the sheet is subjected to compression between the forming rolls. In fact, the formation takes place under pressure—the formation may be described as a "pressure formation" because, at the same time that the material is moved laterally into the webs it is subjected, in the webs, to pressure between the rolls. Now, this pressure may be sufficient to considerably densify the material and therefore to compress the sheet in thickness; and this compression may be sufficient to densify the material to such an extent as to make the formed sheet of the same or substantially the same thickness as the sheet entering the forming rolls. This may

be accomplished to any desired extent by regulating the thickness of the initial sheet and the opening between the forming rolls. An exceptionally dense web may be thus made.

To prevent the plastic material from adhering to the roll their surfaces may be provided with a film of oil or other fluid in any suitable manner. This may be done by oil flowing through holes 42 in the peripheries of the rolls, the rolls being hollow and oil being fed into them. The rolls may also be heated if desired, in any suitable manner, and, for the application of the process to metal, they may be heated to a relatively high temperature, so as to prevent cooling of the metal by contact with the rolls. Fig. 16 shows a roll and heating means at H to heat its periphery. The shaft or inner part of the drum 41 may be hollow for circulation of cooling water.

I have described specifically an expansion in thickness and an expansion in width. It will be apparent that these expansions may be combined. For instance, the rolls shown in Fig. 4 may be set somewhat closer together so that the material will be forced to expand somewhat in width, as well as expand in thickness; or, in the form shown in Fig. 8, the successive pairs of rolls may be set a little wider and wider apart, so as to allow some expansion in thickness while the expansion in width is going on.

In the various forms of devices herein described it will be noted that the plastic or workable material is held or impounded against any movement which might cause its distortion. At all times while the forming process is going on the material is held between the rolls and in engagement with the forming teeth, which prevent any distortion of the sheet where already formed by reason of displacement of material from the parts under pressure and being formed, and also prevent creeping of the material rearward to following parts of the sheet. This feature is particularly well illustrated in the machine shown in Fig. 17, where a large number of teeth are in simultaneous engagement with the sheet and where the pressure is applied gradually and for a long period. In this form of device belts 50 backed by guides 49 may be used of any suitable kind, the teeth 26 being mounted thereon and the belts running over rolls 51 and 52, so placed that the belts gradually converge. This gradual convergence of the belts and the gradual intermeshing of the teeth and their penetration of the sheet, and the gradual application of the pressure to the opposite sides of the sheet accomplish the results hereinbefore spoken of and accomplish the "pressure formation" I have hereinbefore described.

Having described a preferred form of my invention, I claim:

1. The process of forming plastic lath or the like, comprising forming a sheet of a plastic substance, and forming perforations through the sheet while plastic by pressing apart the plastic substance.

2. The process of forming plastic lath or the like, comprising forming a sheet of fibrous plastic substance, and forming perforations through the sheet while plastic by pressing apart the fibers of the plastic substance.

3. The process of forming plastic lath or the like, comprising forming a sheet of fibrous plastic substance with the fibers laid generally longitudinally of the sheet, and forming perforations through the sheet while plastic by pressing the fibers apart transversely.

4. The process of forming plastic lath or the like, comprising forming a sheet of fibrous plastic substance with the fibers laid generally longitudinally of the sheet, and forming perforations through the sheet while plastic by pressing the fibers apart transversely, thereby expanding the plastic sheet, and then setting and finishing the sheet.

5. The process of forming plastic lath or the like, comprising forming a sheet of fibrous plastic substance with the fibers laid generally longitudinally of the sheet, and forming perforations through the sheet while plastic by pressing the fibers apart transversely, thereby expanding the plastic sheet in thickness, and then setting and finishing the sheet.

6. The process of forming plastic lath or the like, comprising forming a sheet of plastic substance, and forming openings in the sheet while plastic by pressing apart the plastic substance.

7. The process of forming plastic lath or the like, comprising forming a sheet of a plastic substance, and forming openings in the sheet while plastic by laterally displacing the substance, while holding the substance of the sheet under pressure.

8. The process of forming plastic lath or the like, comprising forming a sheet of a plastic substance, and forming openings in the sheet while plastic by laterally displacing the substance, at the same time holding the sheet under pressure, so as to compress the substance into the webs formed between the openings.

9. The process of forming plastic lath or the like, comprising forming a sheet of plastic substance, and forming openings in the sheet while plastic by pressing apart the plastic substance, thereby expanding the plastic sheet.

10. The process of forming plastic lath or

the like, comprising forming a sheet of plastic substance, and forming openings in the sheet while plastic by pressing apart the plastic substance, thereby expanding the plastic sheet in thickness.

11. The process of forming plastic lath or the like, comprising forming a sheet of fibrous plastic substance with the fibers running generally lengthwise of the sheet, and forming openings in the sheet while plastic by spreading the fibers apart transversely, and thus expanding the sheet.

12. The process of forming plastic lath or the like, comprising forming a sheet of fibrous plastic substance with the fibers running generally lengthwise of the sheet, and forming openings in the sheet while plastic by spreading the fibers apart transversely, and thus expanding the sheet in thickness.

13. The process of forming plastic lath or the like, comprising forming a sheet of plastic substance and, while the sheet is plastic, spreading adjacent parts apart and thus expanding the sheet in thickness.

In witness that I claim the foregoing I have hereunto subscribed my name this 3d day of May, 1919.

JAMES P. SEXTON.

Witnesses:
V. BERINGER,
VERA JONS.