United States Patent [19]

Olmsted

[11] 3,902,319

[45] Sept. 2, 1975

[54] METHOD AND APPARATUS FOR INSTANTANEOUSLY ISOLATING A FLUID OPERATED LOAD APPLYING CYLINDER FROM ITS SOURCE

[75] Inventor: Peter B. Olmsted, Traverse City, Mich.

[73] Assignee: Olmsted Products Company, Traverse City, Mich.

[22] Filed: Sept. 6, 1973

[21] Appl. No.: 394,720

[52] U.S. Cl. 60/413; 60/327; 60/469; 91/390; 175/27

[51] Int. Cl. F15b 1/02; F15b 20/00

[58] Field of Search 60/325, 327, 371, 372, 60/398, 403, 413, 418, 416, 469, 464; 91/390; 175/5, 7, 24, 25, 27

[56] References Cited

UNITED STATES PATENTS

2,865,401	12/1958	Masneri	60/403 X
3,108,759	10/1963	McConegly	242/79
3,163,005	12/1964	Reed	60/469 X
3,687,205	8/1972	Mori	175/27
3,721,293	3/1973	Ahlstone et al.	175/27

Primary Examiner—Edgar W. Geoghegan

Attorney, Agent, or Firm—Carothers and Carothers

[57] ABSTRACT

The continuous comparison of a retained fluid pressure memory sensed or monitored from a pulsating flow of fluid under pressure to and from a load supporting hydraulic pressure compensating working cylinder through an isolating valve, with said pulsating fluid under pressure to irrevocably close the isolating valve and thereby isolate the working cylinder upon a calculated threshold loss of load or of fluid pressure to immediately render the pressure differences harmless.

22 Claims, 7 Drawing Figures

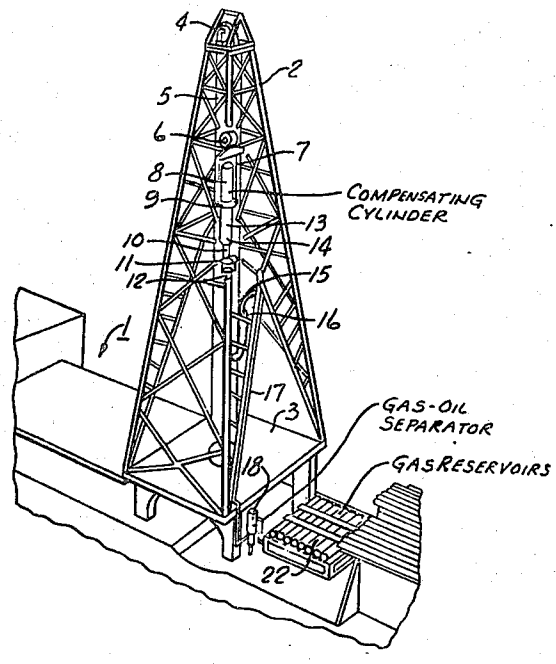

Fig. 1

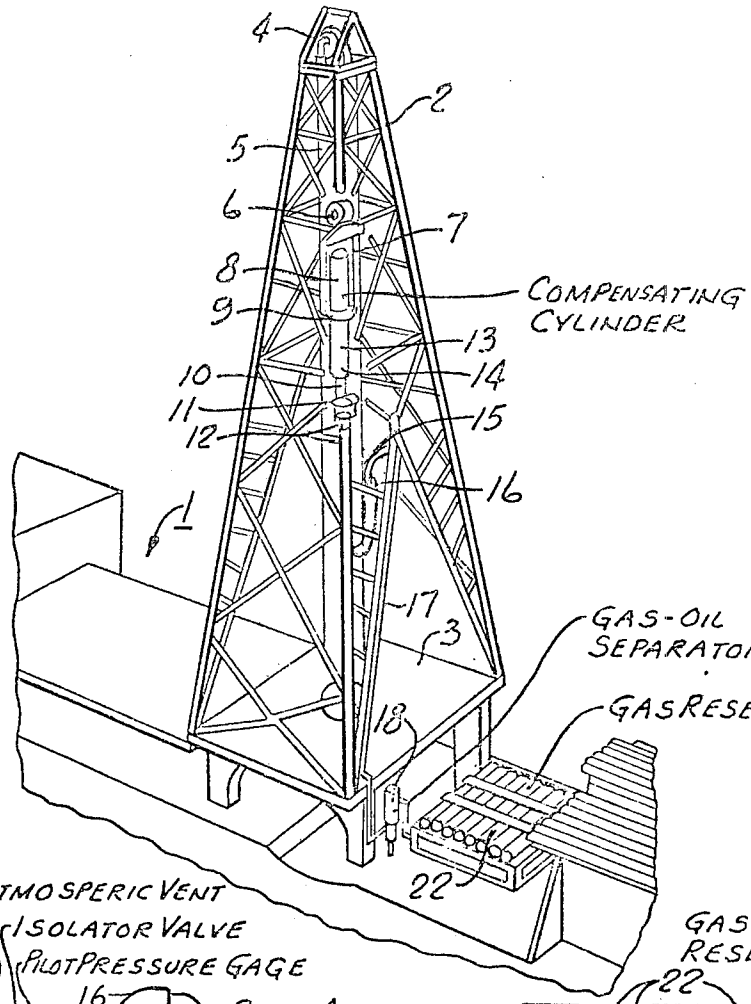
4
2
5
6
7
8
9
10
11
12
13
14
15
16
1
17
3
18
22
COMPENSATING CYLINDER
GAS-OIL SEPARATOR
GAS RESERVOIRS

Fig. 2

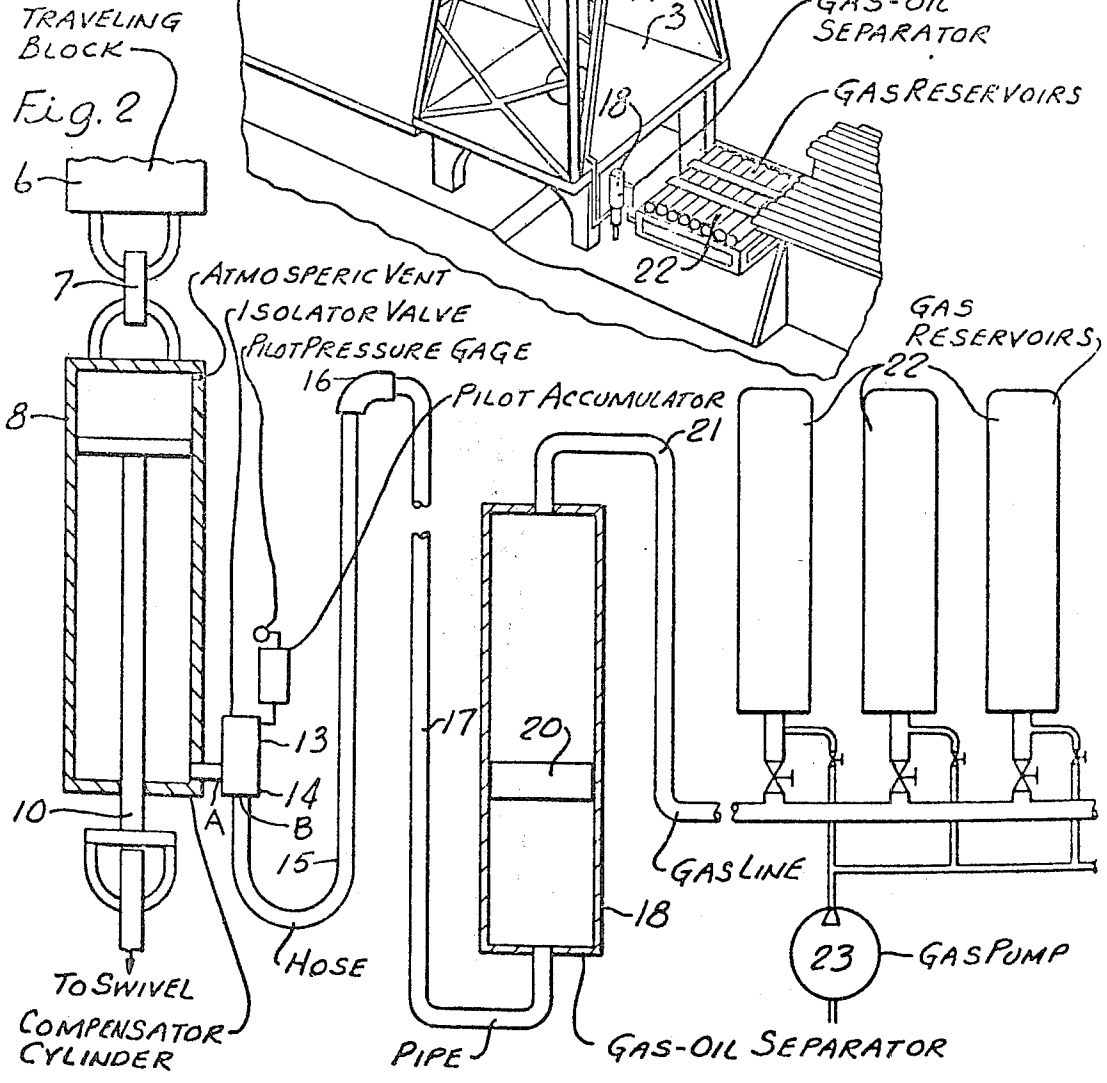
TRAVELING BLOCK
6
7
8
10
ATMOSPERIC VENT
ISOLATOR VALVE
PILOT PRESSURE GAGE
16
PILOT ACCUMULATOR
21
13
14
A
B
15
HOSE
TO SWIVEL
COMPENSATOR CYLINDER
17
20
18
PIPE
GAS-OIL SEPARATOR
GAS RESERVOIRS
22
GAS LINE
23
GAS PUMP

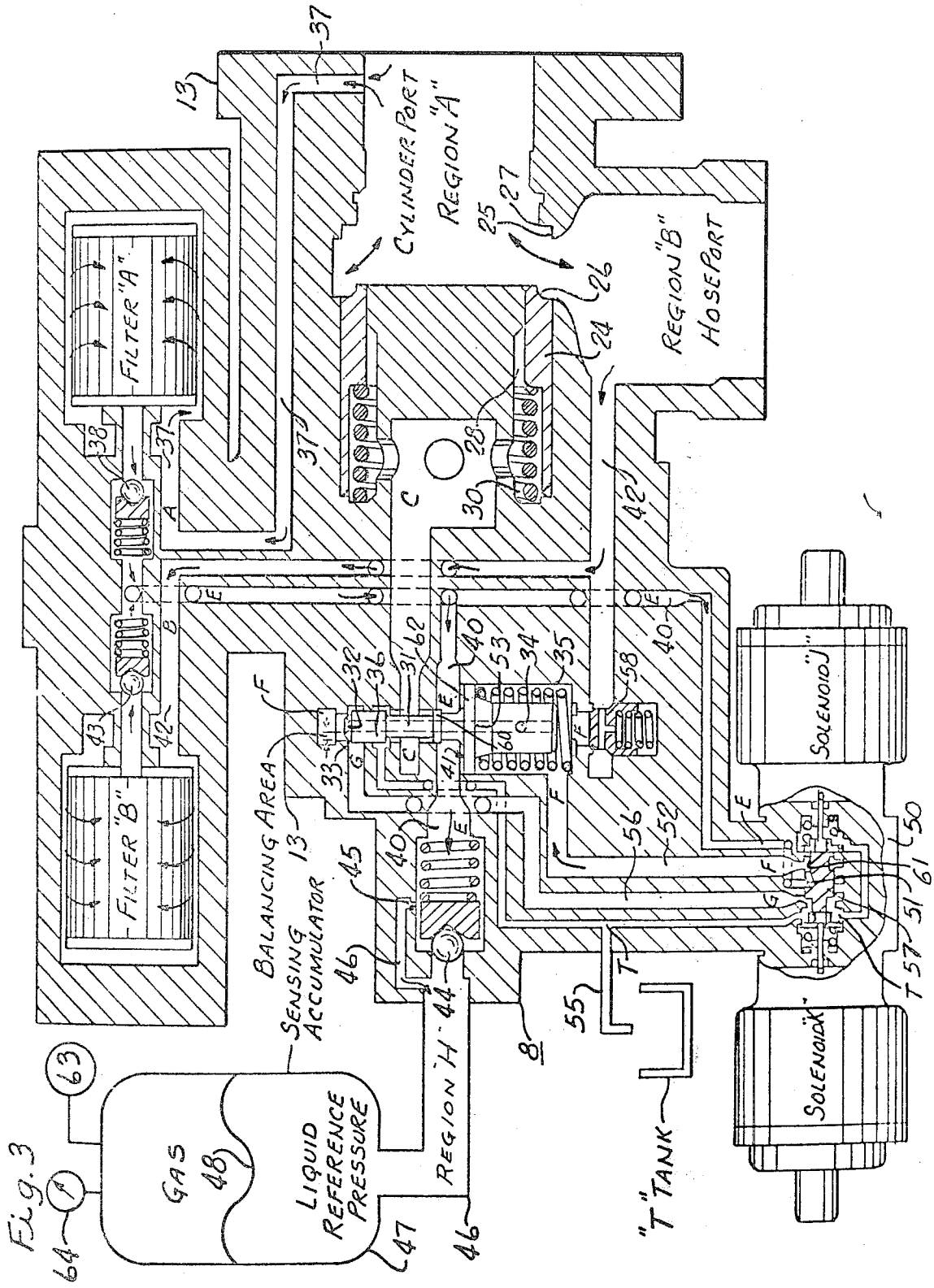
FILTER "A"
FILTER "B"
CYLINDER PORT REGION "A"
REGION "B" HOSE PORT
BALANCING AREA
SENSING ACCUMULATOR
GAS 48
LIQUID REFERENCE PRESSURE
REGION "H"
"T" TANK
SOLENOID "J"
SOLENOID "K"

Fig. 3

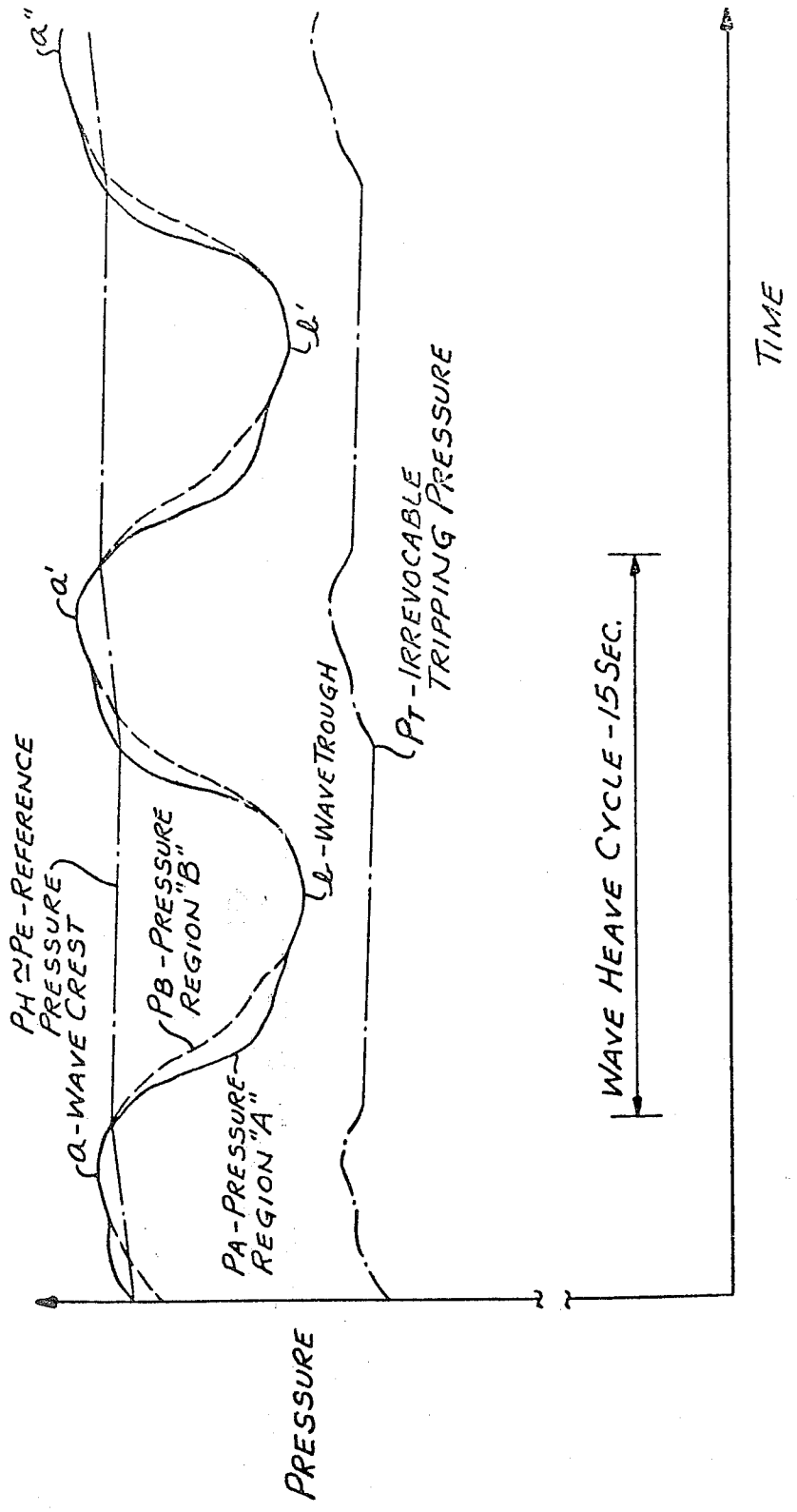
a"
a'
b'
PH ≅ PE - REFERENCE PRESSURE
a - WAVE CREST
PB - PRESSURE REGION "B"
b - WAVE TROUGH
PT - IRREVOCABLE TRIPPING PRESSURE
PA - PRESSURE REGION "A"
WAVE HEAVE CYCLE - 15 SEC.
TIME
PRESSURE

Fig. 4

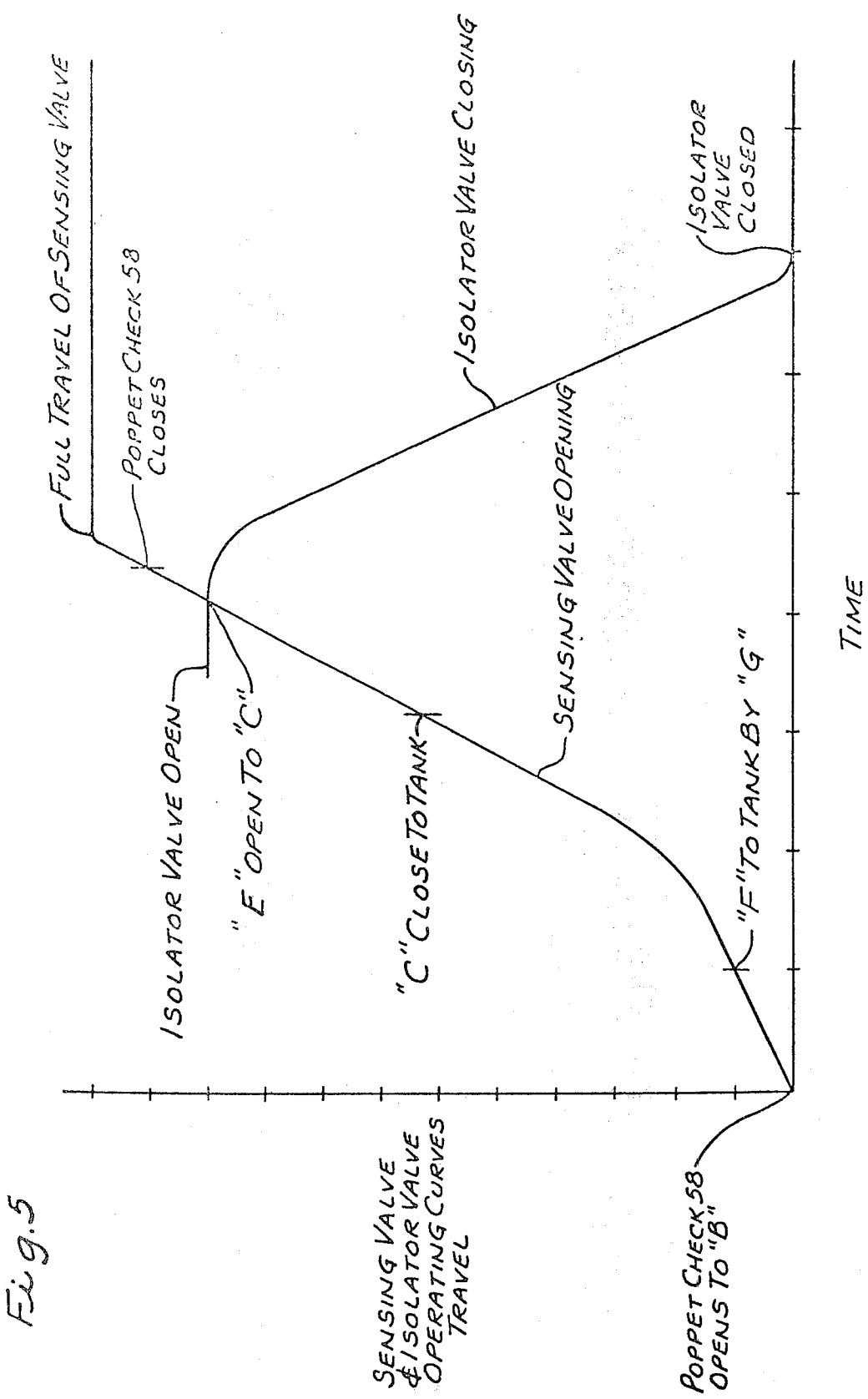
FULL TRAVEL OF SENSING VALVE
POPPET CHECK 58 CLOSES
ISOLATOR VALVE CLOSING
ISOLATOR VALVE CLOSED
ISOLATOR VALVE OPEN
"E" OPEN TO "C"
"C" CLOSE TO TANK
SENSING VALVE OPENING
"F" TO TANK BY "G"
SENSING VALVE & ISOLATOR VALVE OPERATING CURVES TRAVEL
POPPET CHECK 58 OPENS TO "B"
TIME

Fig. 5

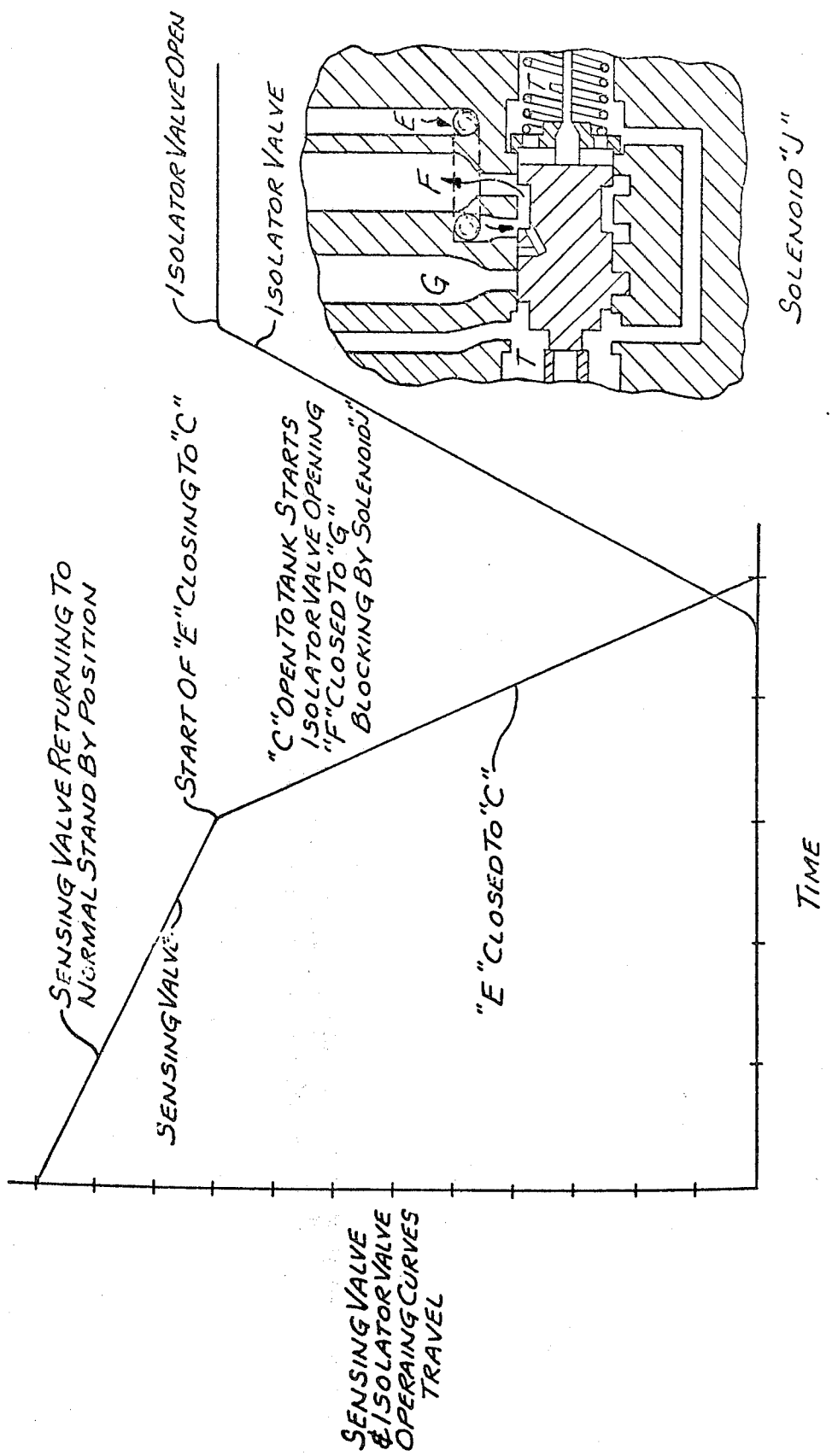
ISOLATOR VALVE OPEN
ISOLATOR VALVE
SOLENOID "J"
E
F
G
T
SENSING VALVE RETURNING TO NORMAL STAND BY POSITION
START OF "E" CLOSING TO "C"
"C" OPEN TO TANK STARTS ISOLATOR VALVE OPENING "F" CLOSED TO "G" BLOCKING BY SOLENOID "J"
SENSING VALVE
"E" CLOSED TO "C"
TIME
SENSING VALVE & ISOLATOR VALVE OPERAING CURVES TRAVEL

Fig. 6

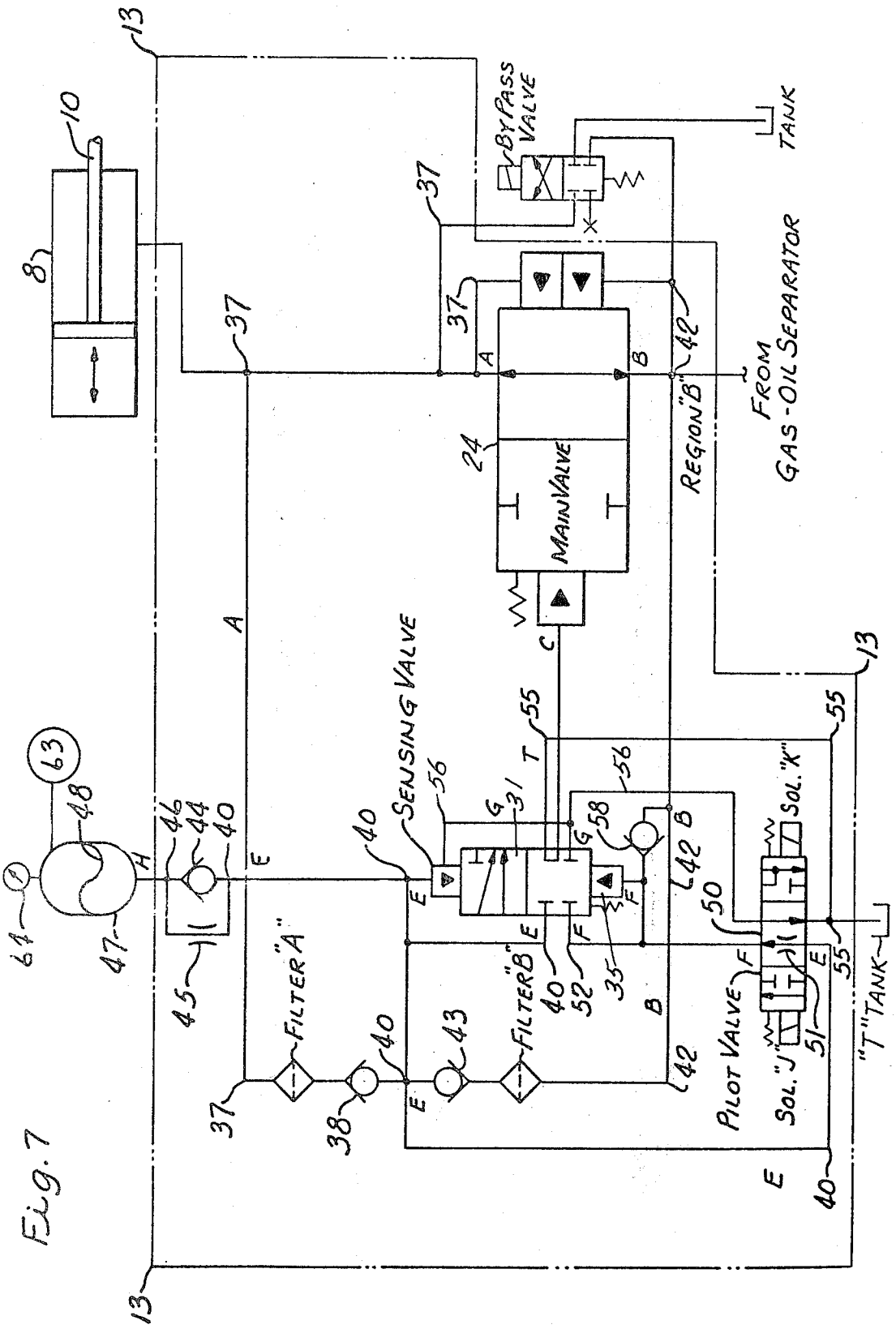
BY PASS VALVE
TANK
FROM GAS-OIL SEPARATOR
REGION "B"
MAIN VALVE
SENSING VALVE
FILTER "A"
FILTER "B"
PILOT VALVE
SOL. "J"
SOL. "K"
"T" TANK

Fig. 7

METHOD AND APPARATUS FOR INSTANTANEOUSLY ISOLATING A FLUID OPERATED LOAD APPLYING CYLINDER FROM ITS SOURCE

BACKGROUND OF THE INVENTION

In the art of earth boring several miles in the ocean floor, it is only practical to place the rigging on the deck of an anchored ship which is subjected to ordinary swells and waves as well as to winds, storms, hurricanes, tidal waves, and earth disturbances or the like. A fluid operated motion compensating cylinder is interposed in the drill string suspension to compensate for the movement between the ship or floating platform and the drill string. The traveling block as well as the top of the rig is endangered if the pressure supply hose breaks or several miles of drill string is suddenly lost leaving a potential explosive charge of pressure against the load supporting piston of the motion compensating cylinder, which would cause it to fire upwardly through the traveling block and out of the top of the rig. This causes considerable damage not only to the structure but to the lives of the men involved in the drilling of the holes at the bottom of the sea.

This invention deals in the art of closing an isolating valve to instantaneously trap the fluid in a load supporting hydraulic pressure compensating working cylinder rendering the same harmless. In order to perform this feat, it is necessary to employ a hydraulic fluid pressure memory device. A hydraulic fluid pressure memory control is not new in hydraulic controls as such, as evidenced in the U.S. Pat. No. 3,108,759 issued Oct. 29, 1963. The problems solved in the prior art by the use of memory systems of fluid under pressure do not teach the system, method and structure of the present invention, nor do they have any suggestion as to how such an invention could or should be made.

When drilling at the bottom of the sea where the water may be anywhere from three to five miles deep, the drill string becomes very heavy and must be supported on an anchored ship that is subjected to constant wave movement as well as to storms of all magnitude and directions which tend to increase the threshold of pressures of operation in the isolator valve and produces a very heavy load on the hydraulic motion compensating cylinder. It is, of course, desirable to produce a hull on the ship that will decrease the wave action as much as possible and also hold the ship regardless of the direction of the waves and wind. These facts are taken in conjunction with the manner in which the rig is supported on the hull of the ship to reduce the pendulum action of the drill string.

The pressures involved may possibly convert the compensator load piston into a missile head which, if not retained upon the breakage of a long drill string, will, if allowed to escape, tear out the traveling and crown blocks as well as the top of the rigs. Such accidents not only delay the operation, but are expensive and the loss of time for shutdown for repairs is, of course, added to the cost of the project.

It is the purpose of this invention to prevent, if not entirely avoid such calamities.

SUMMARY OF THE INVENTION

The present invention provides a very fast isolator to confine high working hydraulic pressures to compensate for quick load release or pressure loss and prevent

damage to the equipment where heavy loads are supported under constant or changing load levels due to changing in load movement or in hydraulic pressures within predetermined limits of the threshold pressure involved. This problem arises in many hydraulic applications, but the most colorful and challenging is that of drilling many miles in the floor of the seas or oceans, which is being performed at such depths that is impossible to have caissons as where employed in the prior art.

The principal object of this invention is the provision of an improved method and structure together with a novel system to isolate a hydraulic load compensating device that provides hydraulic intelligence to confine the fluid under pressure in such a compensating cylinder within a few milliseconds, thereby avoiding disaster.

The load applying hydraulic compensator of the present invention comprises a supported liquid operated compensating cylinder with a piston having an extending stem to which a load is applied. An isolater valve is operable in a chamber connected between the load applying end of the compensating cylinder and one end of an interface liquid-gas separator cylinder or interface bottle which transfers pressure between the liquid and gas, and the other end of the liquid-gas separator cylinder is connected to a supply of gas under pressure. A pressure memory means is provided to control the closing of the isolator valve.

A correlation of the pressure of the fluid supplied to the operating cylinder is continuously monitored and retained as a reference. The pressure of the fluid in the operating cylinder is continuously compared with the monitored reference pressure, and the isolator valve is irrevocably closed when the pressure in the operating cylinder falls below a predetermined threshold relative to the monitored reference pressure which gradually varies with the operating cylinder pressure when the latter gradually changes during periods of time. Thus, the monitoring of the fluid supplied to the operating cylinder to retain a reference which is a correlation of that pressure provides the basis of a pressure memory means to control the closing of the isolator valves should the fluid supplied under pressure to the cylinder retain a predetermined threshold minimum.

The reference pressure itself may be utilized as the prime moving force for actually actuating or closing the isolator valve.

BRIEF DESCRIPTION OF THE DRAWINGS

Other objects and advantages appear in the following description and claims.

The accompanying drawings show, for the purpose of exemplification without limiting the invention or the claims thereto, certain practical embodiments illustrating the principles of this invention wherein:

FIG. 1 is a perspective view of a derrick rig mounted aboard ship.

FIG. 2 is a schematic view of the hydraulic system illustrated in FIG. 1.

FIG. 3 is a monoplanic layout view of the physical valve structure showing the isolator valve, the sensing valve and its accumulator with the pilot valve and its filter system.

FIG. 4 is a time graph of the changes in pressure due to the sea waves in the hydraulic system of the isolator valve.

FIG. 5 is a time graph of the movement of the sensing valve spool and the main isolator spool upon closing the former.

FIG. 6 is a time graph of the movement of the sensing valve spool and the main isolator spool when the sensing valve is actuated by exterior means such as a solenoid pilot valve to open the isolator valve.

FIG. 7 is a hydraulic circuit diagram of the isolator valve hydraulic system.

DETAILED DESCRIPTION

Referring to FIG. 1 of the drawings, the ship 1 supports the derrick rig 2 from the platform 3 and is provided with the usual crown block 4 woven by the hoisting cable 5 to the traveling block 6. Hanger means 7 suspend the compensating cylinder 8 by usual clamping collar indicated at 9. The cylinder has a stem 10 extending from the bottom thereof which, in turn, is connected to the yoke 11 having a swivel hanger upon which is suspended the kelly bar 12. If the device is not drilling, of course, it may suspend the drill string itself from the usual hangers suspended in a similar manner; or when adding or removing lengths of drill pipe to the string, the same may be held by wedge slip blocks supported in the drill table itself which is ordinarily placed below the platform 3 and is provided with the proper rotary mechanism. A section or so of the drill string may be supported within the rig ready for use, however, it has to be anchored against movement owing to the wave action, otherwise they are locked in racks on the deck of the ship from which they are withdrawn for use. The isolator valve 13 has its large opening indicated as region A in FIG. 3 connected to the side of the compensating cylinder 8 adjacent the end from which the piston stem 10 extends. The lower side of the isolator valve housing 14 contains region B or the connection for the hose 15 (FIGS. 1 and 2) which is sufficiently long to allow for at least 20 to 30 foot heave in the ship as well as for the length of drill pipe or casing that is added to the string for the purpose of drilling or for the purpose of extracting oil from the well, or other products sought.

The other end of the hose 15 is supported from the hydraulic pipe coupling 16 which is connected through a section of the pipe 17 to the gas-oil separator cylinder 18 which may be provided with a rigid piston or diaphragm member that separates the gas from the oil such as indicated at 20. As illustrated in FIG. 2, the bottom of the gas-oil separator 18 is connected to the end of the pipe 17 and the upper end of this separator is connected by the pipe 21 which is provided with a series of valve connections for connecting independent bottles of gas that function as reservoirs, and each of the reservoirs as indicated at 22 represent a reservoir bank which may be independently or individually connected into the compressor or gas pump 23, each having their separate control valve for this purpose which may or may not be automatic for switchboard operation.

Referring now to FIG. 3, which is a monoplanic layout view of the physical valve structure showing the isolator valve in its open position; it is in its normal position for allowing the hydraulic fluid to surge in and out of the compensating chamber to maintain a substantial uniform elevation of the drill string or drill pipe, the reproducing lines, or whatever may be suspended from the traveling block. The piston in the compensating cylinder is allowed to have a 20 or more foot stroke if such is the average movement created by the ordinary sea expected. The hose connection must be sufficiently long to reach the upper and lower extremities of the movement of the traveling block.

The isolator valve body 13 is provided with a substantially horizontal cylinder port that connects to the lower end of the compensator cylinder as illustrated in FIG. 2, and this port is designated as region A; the hose port, which is designated as region B is the same size. The isolator valve 24 is a sleeve type valve having two seating surfaces, one a cylindrical surface, the perimeter of the valve being seatable on the seat 25. The other seat is on the end of the isolator valve, and it is represented by the poppet seating surface 26 which seats against the poppet seat 27, which in this instance is illustrated as part of the valve body, but of course, it is a separate seating member which is of prepared steel capable of functioning to produce the results expected of this valve.

The sleeve valve is mounted on a guide plug which seals and snugly fits the inner bore of the valve. The recess 28 is sufficiently large to receive the spring 30 which preloads the isolator valve to close. The recess 28 is connected by radial ports to the region C which is termed the closing region, and accepts the fluid under pressure and passes it to the back or rear loaded base of the valve 24 to force it forward to its seating position. Thus, region C merely connects to a circular port about a sensing spool 31 which has the same designated letter C.

The sensing spool 31 also has two types of valve faces or seats one of which is such as the poppet face 32 at the upper end, which face is divided by the seat 33 of the poppet sensing spool body housing thereby dividing the diagonal face 32 between the areas marked G and F, the latter of which is the regional areas at opposite ends of the sensing spool indicated by the letters F and which are connected by a port passing axially through the center of the spool and indicated at 34. Thus, the poppet face at the upper end of the sensing spool is divided by the seat 33 which is subjected to the pressure in the chambers F. The other or remaining portion of this poppet surface 32 is subjected to the pressures within the latching passage indicated by the letter G.

The sensing spool is ordinarily seated against the upper poppet surface 32 closing the valve at this point, and this spool is biased to close by the spring 35 which is effective against an area that is substantially larger than that of the opposite side, which opposing side is smaller and is exposed to the pressures within the region E. As noted in FIG. 3, the region C which is the closing region for the isolator valve is connected by the cylindrical valve surface 36 to the region T which in this instance is represented by a passageway directly leading to tank. Thus, the pressure within the cylinder port or within the compensator cylinder 8 is sufficient when subjected to the valve face as shown in FIG. 3 to collapse the spring 30 even though it is capable of providing considerable force, such as 550 lbs. Different valves for different conditions may be provided and this type of spring constant is readily varied to conditions for which the isolator valve is calculated to control.

As shown, the cylinder port has a passageway 37 which leads to filter A representing the region A or pressure chamber of the compensator cylinder. Port 37 passes through the filter A and thence flows past the

check valve 38 which is spring loaded and thence to passage 40, which is the E passage or region E wherein fluid pressure therein is applied to the aforesaid opposite side of the valve spool 31, representing a smaller total area in the operating section of the sensing spool as indicated at 41 then the total area opposing it.

In like manner, the hose port region B is connected by the passageway 42 to filter B and upon passing through this filter flows back through the check valve 43 through the same passage E which is represented by 40. Thus, the passageways 37 and 42 supply their representative fluids under pressure which are constantly changing to their respective filters and thence back to the common or central regional area E. From the sensing valve region E, the fluid is permitted to flow into the chamber of the check valve 44 but being unable to pass this check valve it is forced to travel through the limited orifice 45 and thence to the passageway 46 that passes to the sensing accumulator 47 which accumulator is provided with a diaphragm 48 to separate the gas from the liquid. Check valve 44 is also spring loaded, and the pressure within the accumulator 47 which, by the way is represented as region H, will flow outwardly directly to and past the check valve, if the pressure is sufficient to overcome the spring load plus the pressure in region E, from the sensing accumulator to the area or region E.

The pilot valve 50 is attached to and forms a part of the valve body 13 and as shown is provided with a connection to the tank as indicated by the letter T which not only collects from both ends of the pilot valve, but also connects to the latching passage G from the sensing valve poppet face 32. In the position of that shown in FIG. 3, the latching passage is directly open to the tank through the pilot valve 50. As shown, this pilot valve has three positions; one indicated as the central position shown in the view of FIG. 3 wherein the spool is in the central position and F is connected to E through a restriction such as the restriction illustrated within the pilot valve spool at 51. Thus, so far two restrictive orifices to which fluid must flow have been shown. As with the valve operational areas, such orifices may be advantageously changed for selecting operative values of different characteristics for different purposes, as such factors are in fact constant, depending upon their selection. As shown in this view, the restriction 51 permits the passage of fluid from the pressure area E to the pressure area F, passage 52 of which is connected to the spring loaded area 53 of sensing spool 31 which is opposed to the opposite side or region E of the valve spool as indicated at 41. These areas together with the split area of the face 32 represent additional constants which may be changed to suit the purposes desired for calculating the operation of the sensing valve in controlling the closure of the isolator valve 24. Thus, the sizes of the opposing faces of the sensing valve may be chosen so that the area of the operating face 44 in region E is selected in a manner to determine the threshold pressure on the area of the preloaded face 53, which latter face will initiate the motion of the sensing spool expressed by the following equation:

$$P_T < K_1 (P_E) - K_2 - K_3 (F_f).$$

P_T represents the threshold pressure against the preloaded face area at the time the sensing valve begins to move.

P_E is the pressure on the operating face E or 41.

F_f is the friction or stiction force which inevitably accompanies a valve member not continuously actuated and which has been stationary for a period of time which normally increases with that period of time.

K_1 may represent the ratio of the closing and opening areas represented in regions E and F or against the faces 41 and 53.

K_2 is the proportion between one of the pressure operating areas and the spring pressure exerted by the spring 35.

K_3 is an inverted proportion of one of the operating areas of the sensing spool.

Thus by properly selecting the areas and proportioning them with respect to each other, one is enabled to arrive at a pressure calculation of the threshold pressure that will function under certain conditions. Variance of any of these factors, will, of course, change the conditions; then it is necessary to reconsider such proportions in accordance with the equation. Frequently this becomes a cut and try proposition. It may not only become necessary to change the relative proportions of the different areas of the sensing valve but also the timing in which these areas and valve connections function relative to each other. Thus, there is considerable latitude in which to work to provide the proper sensing valve for performing a specific job under specific pressure conditions under countless variations in the factors involved that must be protected such as the wave conditions, the depth of drilling through the open sea, the character of the bottom of the sea through which the drill string enters the mantle of the earth and other physical conditions that arise from the specific problems involved.

Again referring to FIG. 3, it will be noted that the sensing valve spool 31 is provided with a spool type area that connects the tank passage 55 to the region C that is connected directly to the chamber within the guide plug for the isolator valve 24 and is provided with radial ports to connect the region C directly to the annular recess 28 which exposes the whole rear of the face of isolator closure valve 24 to the pressure therein. As shown in FIG. 3, this chamber is now connected to tank by the cylindrical valve surface 36 and the pressure within the cylinder port, which is required to be greater than a pressure such as 64 p.s.i. to even open the isolator closure valve 24, and, in fact, the pressure within the cylinder port (Region A) as well as the hose port (Region B), is sufficient to force the isolator valve 24 so as to collapse the spring member 30 to the position and condition as shown in FIG. 3 owing to the fact that the chamber C is connected to tank.

Referring to FIG. 4 which illustrates the heave cycle of the typical variation wherein the reference pressure P_H is indicated by a substantially horizontal line and for all practical purposes is equal to that of the pressure P_E as indicated. This is the reference pressure which must at all times be materially higher than the troughs of the wave cycles which are represented by the changing pressures in the regions of the cylinder port "A" as represented by P_A and of the hose port "B" represented by P_B. In view of the fact that the piston within the compensating cylinder 8 actually supports the load, the volume of the hydraulic fluid within the cylinder, which constantly changes owing to the waves that produce heave cycles, is immediately reflected in the curve P_A. The pressures in the chamber P_B, of course, lag slightly as demonstrated by the dashed curve P_B.

The tripping pressure which causes sensing valve spool 31 to function for the purpose of closing the isolator valve 24 is demonstrated by a pressure curve which is substantially similar in shape to the pressure curve P_H, but appears materially below the troughs of the wave cycle indicated at b and b', etc. The wave crests are indicated by a, a', a'', etc. Thus, any loss of load in any position along the wave cycle as shown in FIG. 4 which would cause both of the pressures of P_A or P_B to fall below the heave cycles to a value equivalent that of the tripping pressure P_T, represents the threshold pressure. Since valve 58 allows free flow from region F to region B, the pressure in region F will follow the pressure in region B when the latter falls. When the pressure P_B falls below P_T, the valve 58 opens, starting movement of the sensing spool. This would shift the sensing valve spool 31 from the position shown in FIG. 3 downward first allowing the poppet face 32 at the top of the spool to open from the poppet seat 33 for the purpose of connecting the passageway 34 axially through the spool from the lower region F in FIG. 3 to the region F at the top of the spool and thence flow past the poppet seat 33 to latching passage G having reference numeral 56. Since the spool 57 of the pilot valve 50 is in a centered position which indicates that neither the solenoids J or K are energized, and as illustrated in FIG. 7, fluid pressure from section F is bled off through the latching passage G to tank liquid flowing from region F past valve 58.

This movement of the spool and the sensing valve is shown in FIG. 5 by means of a curve along which is indicated what happens when the poppet valve surface 32 opens from its seat 33, the first function being the bleeding off of the region F through the center of the sensing valve spool and the latching passage G to tank.

The next function in the downward movement of the sensing spool is the closing by the spool area 36 of the closing region C of the isolator valve 24 from the tank connection 55.

The next function of the movement of the sensing spool downwardly would be to crack the spool section 60 of the sensing valve spool 31 to open the region E in the passageway 40 to region C thus allowing the reference pressure P_H to flow from the pilot accumulator 47 past the check valve 44 to the passage 40 or the region E and thus flow directly to closing region C for the purpose of closing the isolator valve 24. As the hydraulic fluid enters the region C, the isolator valve immediately begins to move to its closing position from that shown in FIG. 3 and as thus demonstrated in the second curve shown in FIG. 5 follows the path of movement indicated for the isolator valve closing.

The closing of the isolator valve is performed in a relatively short period of time, and due to the cylindrical valve seat 25 and the poppet valve seat 27, a small hydraulic cushion is formed just before the valve finishes its seating process.

The isolator valve could be a spool or solid poppet valve, which is an important object of this invention.

Owing to the fact that the pilot valve has not been moved and is still in the center position as indicated in FIG. 3, the latching passage G continues to deplete fluid from the region F of the sensing valve flowing past the poppet seat 33 to this latching passage 56 and provides a lack of pressure in the region F. However, at the time that the spool section 60 of the sensing spool 31 cracks the opening from the passage E to the closing region C, the poppet valve 58 reseats itself because of the continued drainage of fluid pressure from the region F. Thus, the poppet valve 58 is closed before the isolator valve starts to move, or at best slightly after the isolator valve begins to move.

Thus, it will be noted that the latching passage G not only provides for the irrevocable operation of the isolator valve, it also prevents resetting of the sensing valve spool owing to the fact that it continually retains the opening from the section F to tank and will stay that way ad infinitum unless the pilot spool is shifted.

In order to reset the isolator valve, one energizes the solenoid J of the pilot valve 50 which moves it to the position as indicated in FIG. 6 which shows a second graph of two curves illustrating the return of the sensing valve to the position shown in FIG. 3 by momentarily energizing solenoid J to open the isolator valve, which shifts the pilot valve to that position where pressure P_E from the region E is directed through an open passage 61 in the pilot valve thus connecting region E for passage 40 directly to region F; and what is more important, blocking off the passage 56 which is the latching passage G so that at the time the spool is being forced upwardly in FIG. 3, there can be no leakage of the fluid past the poppet surface 32 and the seat 33 to the latching passage G. In this condition, the pressure on opposite sides of the spool section 62 places the same pressure in region F against the larger area 53 which with the aid of the spring 35 moves to close the spool 31 to its seating position as shown in FIG. 3 against the pressure E, which acts against the smaller area 41 of the same spool section 62. Thus, with the differential in area together with the loading of the spring 35, the sensing spool seats in a rather short time (milliseconds) as indicated by the curve in FIG. 6.

As the spool 31 section 60 of the sensing spool moves, it first closes the region E to C. The next action is opening the region C to tank through tank passage 55. When the spool is finally seated with the face 32 against the seat 33, the pressure within the cylinder port A and the hose port B is sufficient to drive the isolator valve 24 into the position as shown in FIG. 3 which is represented by the second curve in FIG. 6 showing movement of the isolator valve upon opening the same.

Thus, it is understood that a mere voluntary energization of the solenoid J will create this function because in this position, the isolator passage G has been blocked off, which is always required to start the action of the pressures on the sensing spool to close the same. Once closed to the position as shown in FIG. 3, the isolator spool will immediately open as indicated by the curve, provided there are the proper pressure differentials in region A and region B as illustrated in FIG. 4.

FIG. 7 is a hydraulic circuit diagram of the structure illustrated in FIG. 3. The same reference numerals are applied to the same lines and indicated symbol structure as that shown in FIG. 3. It will be noted that the valve housing body 13 encompasses the pilot valve, the hose port region B having the passage 42 connected thereto, and the cylindrical port region A which is directly attached to the bottom of the compensating cylinder below the travel of the compensating piston that supports the load suspended from the stem 10.

As previously described in conjunction with FIG. 3, when the pressure in chambers A or B of the main valve or isolator closure valve 24 falls below the predeter-

mined tripping or threshold pressure of sensing valve **31** as determined by the sizes of the opposing faces in the sensing valve which are operated upon by the fluid pressures in regions E and F, poppet valve **58** opens starting movement of the sensing spool **31** in the downward direction thereby connecting region F to reegion G so that fluid pressure from region F is bled out through region G to tank through pilot valve **50.** Region E is also connected to region C of isolator valve **24** which was formerly connected to tank thus allowing the reference pressure from accumulator **47** to pass through check valve **44** to passage **40** through region E directly to closing region C for the purpose of closing isolator valve **24.**

In order to reset the isolator valve, solenoid J of the pilot valve **50** is energized thereby shifting it to the right in FIG. **7** to connect region E directly to region F without the former restriction orifice **51** and also blocking off passage **56** to tank to thereby permit spring **35** to move to its original seating position as shown in FIG. **7.**

Also illustrated in FIG. **7** is the bypass valve which circumvents the entire isolator valve **24** in order to permit one to manually bypass the same if desired.

The isolator valve comprising this invention controls the flow of hydraulic fluid to and from compensating working cylinder **8** which heaves up and down with the ship but allows the working piston therein to travel as much as **20** feet in the cylinder under controlled pressure conditions of flow of the hydraulic fluid so as to compensate for the heave of the waves in lifting and lowering the motion of the ship from the crest to the trough thereof as illustrated in FIG. **4.**

The task of this isolator valve is for the purpose of preventing any relative motion of the drill string relative to the ship when drill string sections are added or taken from the drill string or for the purpose of adding sections of drill pipe or casing pipe as the case may be when connecting the pipe to the drill string or for the production of oil from the drilled well, which may lie several miles below the surface of the sea where it penetrates the mantle of the earth for the production of gas, oil or other substances to be obtained from the bowels of the earth.

The isolator valve therefore must be actuated to close upon the addition of any section of drill string for further penetrating the drilling operation.

Another function of this isolator valve is the production of a check operation of the isolator valve itself and the equipment in conjunction therewith which function merely proves to the operator that the equipment is always in readiness to perform its proper function when a drill string breaks or the pressure supplied from the hose is lost. This or any other type of failure may be employed to actuate the isolator valve for the purpose of saving the equipment from reduction of very high pressure that would charge the compensating cylinder and convert the piston carrying the load to function as a missile.

The environment of the valve renders it difficult to operate, which is the reason it is necessary to apply filters in the carefully closed and guarded hydraulic system of this hydraulic control. This is substantially refiltering filtered hydraulic operating fluid to insure the important performance of the task of this isolator valve.

The heave cycle of the movement of the water is seasonal, and allowances for variations of these seasonal conditions are necessary to the continued operation of the system. Such variations require not only a change of the number of gallons per minute in the compensating cylinder but also the stroke of the piston in the compensating cylinder. However, in regard to the load variation, the load carried by the piston within the cylinder varies considerably but in all cases it supports the majority of the weight of the drill string. The piston of compensator cylinder strokes in and out, and the total volume for gas varies in the compensators. This, in turn, causes a variation in the gas pressure that reflects back to the cylinder causing the load variations. Even though the load variation is undesirable, there is usually enough gas volume in the bank to keep the pressure from varying more than 10% percent per heave cycle.

As illustrated, the heave cycle period is approximately 15 seconds, during which time the piston of the compensator cylinder may stroke as much as 20 feet in each direction.

In addition to the variation in pressure due to compression of the gas, there is also a second pressure variation due to the frictional losses in the lines and through the valve structures that also cause variation in the load carried by the cylinder. At highest heave velocities, these losses may be considerable. This means that a load variation due to fluid friction may be less than three (3) percent when the load is large, but as much as thirty (30) percent when the load is small or low.

The pressure due to compression and friction are not additive, since the maximum variation of cylinder pressure due to fluid friction occurs at midstroke when the velocity is maximum. But the pressure variation due to compression of gases occurs at the extreme ends of the stroke of the piston of the compensating cylinder.

One of the principal advantages of this invention lies in the structure of the isolator spool valve per se. It is provided in the form of the cylindrical spool operating between the plug and a recess with small operating areas relative to its length and preloaded by a spring force in its closed position which requires a predetermined pressure in the cylinder for opening the valve.

The sensing spool is provided with opposed areas calculated to operate under certain pressure conditions for shifting the same to supply operating pressure conditions that control the operation of the isolator spool.

The sensing spool, like the isolator spool, is preloaded to keep the same closed in a normal operating position that permits the operating pressure within the cylinder port to hold the isolator valve in its open position against its preloaded spring pressure. One of the important features of this invention is the provision of the latching passage such as described in the specification as G passage **56.** This passage has the unique function of controlling the operation of the sensing spool, which when actuated under predetermined pressure conditions operates to produce an irreversible closing operation of the isolator valve. It is impossible to stop or otherwise interfere with the operation of closing of the isolator spool to seal the fluid within the compensating cylinder once the sensing spool has been started in its performance to actually close the isolator valve.

The sensing spool itself provides particular advantages comprising the basics of this invention. As shown in FIG. **3,** the sensing spool is held by the pressure in

region E in the standby position even though opposed by the compressed load of the spring **35**. The area of region E as indicated at **41** is obviously smaller than the area **53** of the spool section **62** subjected to pressure in region F and indicated at **53**. Thus, the pressure in region E must be considerably greater to overcome the load of the spring **35** together with the pressure in region F. These areas where chosen to provide maximum reliability, and the diameter was chosen also to increase the reliability of the sensing spool, because while larger diameters would increase the differential force due to a given pressure differential, further increase in the diameter would tend to increase the deflections within the bore and the spool, which would require the use of closer tolerances that would necessitate closer fits increasing the friction as well as the possibility of stiction or the sticking at low pressure when deflections are not present which would reduce reliability of the sensing spool.

During long holding cycles of valves of this character, silting occurs which will unbalance the forces a considerable amount or perhaps at least (8) percent, which with these areas and pressure could not be tolerated. As previously stated, this is brought out by the equation

$$P_T = K_1 (P_E) - K_2 - K_3 (F_f)$$

where P_T is the pressure in the region F at which tripping occurs, P_E is the pressure in the region E, and F_f is the friction or stiction representing the sticking force which may be as large as 20 lbs. or more, but on the other hand may be zero if the valve is frequently used.

It is for this reason that filters are employed to supply the pilot accumulator and for the sensing valve so that the fluid under pressure taken from the cylinder port A or the hose region B is filtered. All hydraulic systems that employ filters of this character must be periodically changed because this type of filter merely breaks when it gets loaded with silt.

As indicated in FIG. **3**, pressures are interconnected in region E through passage **40** and the restriction **51** in the pilot valve **50**, and passage **52** to region F. However fluid so supplied is continuously bled off past the check valve **58** to region B causing the pressure in region F to follow any variations occurring in region B.

As indicated in FIG. **4**, if the pressure in the hose region B as indicated by the dashed curve P_B momentarily falls below the tripping curve P_T due to a break in the hose, the sensing spool **31** will begin to move as previously described and will cause flow from the accumulator to open the valve **44** to bring in the memory pressure for the purpose of operating the isolator spool **24** because the pressure did go below that thereshold where the system will function to irrevocably shift the sensing spool because the threshold pressure signifies a catastrophy has occurred. When the sensing spool is activated in the manner as illustrated by the curve in FIG. **5**, the memory pressure from the pilot accumulator opens region E to region C after the latter has been closed to tank. The isolator valve **24** quickly and irrevocably is closed as indicated in FIG. **5**.

The same action would happen if the drill string were to break relieving the load from the piston within the compensating cylinder, because even though the cylinder is still connected to a source of high fluid pressure through the hose and interface bottle, that pressure will not have time to reach the sensing valve before the movement losses of the pressure has had time to actuate the sensing valve. However, the sudden loss of pressure may be substantially reflected as a shock wave in region B, but would not interfere with the closing of the isolator valve.

The only way this valve can be reopened would be by energizing the solenoid J as shown in FIG. **6** to block the latching passage G indicated at **56** and permit the pressure from the accumulator or any restored pressure within the cylinder and hose regions A and B to enter region F and restore the position of the sensing valve to its standby as shown in FIG. **3**.

It is also significant to point out that this invention contemplates the closing of the poppet valve **58** to shut off flow from region B, the hose port, to region F upon the opening of region E to C when closing the isolator valve.

In order for any pressure change to be measured, there must be some reference pressure or memory pressure as obtained by the pilot or sensing accumulator as the relative pressure. The pressure in this pilot accumulator must be added to and controlled by the small orifice through which the hydraulic fluid must flow for the purpose of adding pressure thereto. However, when used, the large check valve quickly places the pressure in region E of the sensing valve so that it will perform the function of the differential pressures. Thus, a direct connection between region H and region E is not permissible for these reasons.

Region F under standby conditions as shown in FIG. **3** will follow closely the pressures of the region B representing the hose connection to the compensator cylinder **8** and at the same time there is a steady flow of oil from region E to region F through the orifice in the spool of the pilot valve tending to keep region F pressure high. However, as shown in FIG. **5**, that pressure is quickly drained off upon the opening of the poppet valve **58** draining the region F to B.

When the isolating valve is closed due to the breakage of the drill string, the pressure in region B returns to its original value and surges to a higher value just before the isolator valve is fully closed. This means that the pressure in region B, which is replenished through the hose from the interface bottle, can become greater than the pressure in region H, and would become substantially greater than the pressure in regions E and C, which is forcing the isolator valve to its closed position. This cannot take place because of the check valve **44**, which would prevent the flow of the surge of pressure from region B to the accumulator region H. Thus, the check valve **44** insures that the shut off valve will keep closing under the action of its main spring, even though a momentary surge of pressure in region B tends to slow it down.

One of the important factors of this invention is the use of the pilot valve **50** in combination with the sensing valve to unbalance the sensing spool **31** in the same manner as the unbalance which would occur if there is a loss of pressure in region B. This results in a sequence of events that take place which is identical to that which take place when a catastrophy occurs, which is an important object of this invention because the isolating valve must be closed frequently or operated purposely in making the conditions identical to an emergency closing and thus provides an indication that the valve is functional.

With the sensing valve spool seated at the bottom of the stroke and the isolator valve **24** being closed upon its two seats **25** and **27**, the region E is fully open to the

region C for maintaining the isolator valve **24** in its closed position and further since the pilot valve is in its center position as originally shown in FIG. **3**, F continues to drain through passageway **34** of the sensing valve to and past the poppet face **33** to the latching passage G, **56**, thence through the poppet valve to tank. Thus, the latching passage really functions not only to latch the isolator valve in its closed position but also to latch the sensing valve in its operated position to maintain the isolator valve in its closed position regardless of the surge pressure received from the region B.

In order to reopen the isolator valve **24**, the solenoid valve of the pilot valve must be momentarily energized as shown in FIG. **6** to block the latching passage G, **56**, and prevent the drainage of region F of pressure to tank. The sequence of operation is illustrated by the curves of FIG. **6** as previously stated from the shifting of the sensing valve to the opening of the isolator valve **24**.

This places the sensing valve as well as the isolator valve in the same position as that illustrated in FIG. **3**.

Under very low pressure conditions, the fluid pressure will be unable to open the isolator valve **24** because at least a considerable pressure must exist in regions A and B to overcome the 550 lbs. force of the loading spring **30**.

Again, it is necessary to have sufficient pressure to operate and offset the force of the sensing valve loading spring **35**. Thus, there is a pressure cylinder load below which the particular sensing spool valve cannot function. The pilot valve or sensing valve accumulator representing region H must be provided with a gas pressure less than the lowest pressure in region B.

The precharged pressure is that pressure showing on the gauge **64** of FIGS. **2** and **3** which should be that pressure shown on the pilot gauge after the oil pressure in the system has been drained off and the gas temperature has had a chance to stabilize at ambient temperatures.

I claim:

1. A load applying hydraulic compensator comprising a supported liquid operated compensating cylinder with a piston having an extending stem to which a load is applied, an isolator valve operable in a chamber connected between the load applying end of said compensating cylinder and one end of an interface liquid gas separator cylinder transferring pressure, the other end of which is connected to a supply of gas under pressure, and pressure memory means to store and directly apply a memory pressure sensed from said isolator valve chamber to control the closing of said isolator valve.

2. The structure of claim **1** characterized by an operating area on one end of said isolator valve and a loading means directly applied to said operating area of said isolator valve by said pressure memory means to close the same.

3. The structure of claim **2** characterized by a spring means applied directly to said operating area on said one end of said isolator valve as a preloading means urging said valve to close.

4. The structure of claim **2** characterized in that said operating area on said one end of said isolator valve is directly connected to a liquid supply under pressure as means to directly close said isolator valve.

5. The structure of claim **4** characterized by said operating area on said one end of said isolator valve for directly receiving said liquid under pressure to close said valve also including a preloading spring means urging said valve to close.

6. The structure of claim **4** characterized by a fluid pressure controlled preloaded sensing valve displaceable to control the flow of liquid under pressure to said operating area of said isolator valve, a sensing accumulator to retain a pressure memory within predetermined limits to move said sensing valve for admitting liquid under pressure from said sensing accumulator to operate said isolator valve to its closed position upon a predetermined reduction of pressure in said compensating cylinder.

7. The structure of claim **6** which also includes a latching passage which is normally directly connected to tank when said isolator valve is open, initial movement of said sensing valve connecting said isolator valve preloaded face to tank through said latching passage upon a predetermined threshold reduction of pressure in said compensating cylinder to induce an irrevocable closing of said isolator valve.

8. The structure of claim **6** which also includes a preloaded face on said sensing valve which is greater in area than an opposing face on said sensing valve supplied with fluid pressure from said sensing accumulator which overcomes the pressure against said preloaded face upon the loss of pressure on either side of said isolator valve chamber, and a balancing area on opposite ends of said sensing valve equal to the difference between the area of said sensing valve preloaded face and the area of its said opposing face.

9. The structure of claim **8** which also includes a check valve connected directly from the preloaded face of said sensing valve to its accumulator and thence to said operating area of said isolator valve upon operation of said sensing valve to produce pressure on said isolating valve operating area upon the failure of pressure in said isolator valve chamber.

10. The structure of claim **8** which also includes a check valve connected from the preloaded face of said sensing valve to the liquid gas separator cylinder side of said isolator valve to reduce the pressure on the former upon the failure of pressure in the chamber of said isolator valve.

11. The structure of claim **8** which also includes a passage from each side of said isolator valve connected directly through its own check valve and which then combines to one line directly connected to said sensing accumulator.

12. The structure of claim **11** which also includes a filter in the inlet side of said passageways adjacent the isolator valve side of its respective check valve.

13. The structure of claim **7** which also includes a three-state externally controlled pilot valve means connected when operated to one state to connect said preloaded area of said sensing valve to a tank and cause said isolator valve to close, and when operated to its second state to cause said isolator valve to open by applying fluid pressure from said sensing accumulator to said preloaded area of said sensing valve and block said latching passage to keep from bleeding off said fluid pressure and open said isolator valve and connected in its third state to open said latching passage to tank and to supply fluid pressure to said preloaded area of said sensing valve from said sensing accumulator through a restriction orifice, said sensing valve blocking said isolator valve latching passage.

14. The structure of claim 8 which also includes the selection of the sizes of said opposing faces in said sensing valve in that the area of said operating face is selected in a manner to determine the threshold pressure on the area of said preloaded face which will initiate motion of the sensing spool where said pressure is given by the equation

$$P_T = K_1 (P_E) - K_2 - K_3 (F_f)$$

wherein P_T represents the threshold pressure against said preloaded face area, P_E is the pressure on said operating face, and F_f is the friction or stiction force which inevitably accompanies a valve member not continuously actuated and which has been stationary for a period of time and which normally increases with time.

15. The method of closing a fluid isolator valve substantially instantaneously to isolate a load applying fluid operating cylinder from a source of operating fluid under pressure,

comprising the steps of,

continuously monitoring and retaining as a reference a correlation of the pressures of the fluid supplied to the operating cylinder,

continuously comparing the pressure of the fluid in the operating cylinder with the monitored reference pressure,

and irrevocably closing the isolator valve by utilizing the monitored reference pressure when the pressure in the operating cylinder falls below a predetermined threshold relative to the monitored reference pressure which gradually varies with the operating cylinder pressures when the latter gradually changes during periods of time.

16. The method of claim 15 which also includes the step of providing an independent source of fluid under pressure as a basic reference pressure, limiting the rate of flow of the monitored reference pressure to the basic reference pressure.

17. The method of claim 16 which also includes the step of providing an unrestricted flow of the basic reference pressure directly to the isolator valve when the predetermined threshold pressure is reached to close the isolator valve.

18. The method of claim 17 which also includes the step of replenishing the correlated pressure from the fluid in the operating cylinder or from the fluid supplied to the operating cylinder from both sides of the isolator valve with an independent source of fluid under pressure as a basic reference pressure to control the monitored correlation of reference pressures.

19. The method of claim 18 which also includes the step of separately filtering each of said monitored fluid pressures before combining the same.

20. The method of claim 15 which also includes the step of providing a pressure sensing valve with predetermined opposed pressure areas one to maintain the sensing valve closed and another to open the sensing valve upon a predetermined pressure thresold that causes the irrevocable closing of the isolator valve.

21. The method of claim 20 which also includes the step of externally actuating a pilot valve system to produce the same operable procedure as created when the operation of the isolator valve is automatic upon the creation of a predetermined threshold pressure to irrevocably close the isolator valve.

22. The method of claim 20 which also includes the step of providing a fast pressure unloading flow from the sensing valve preloading face to provide instant closing of the isolator valve upon sudden loss of pressure from the fluid supplied to the operating cylinder.

* * * * *