J. H. BARTLETT, JR.

TRUNK.

APPLICATION FILED AUG. 5, 1914.

1,203,169.

Patented Oct. 31, 1916.

3 SHEETS—SHEET 1.

Fig. 1.

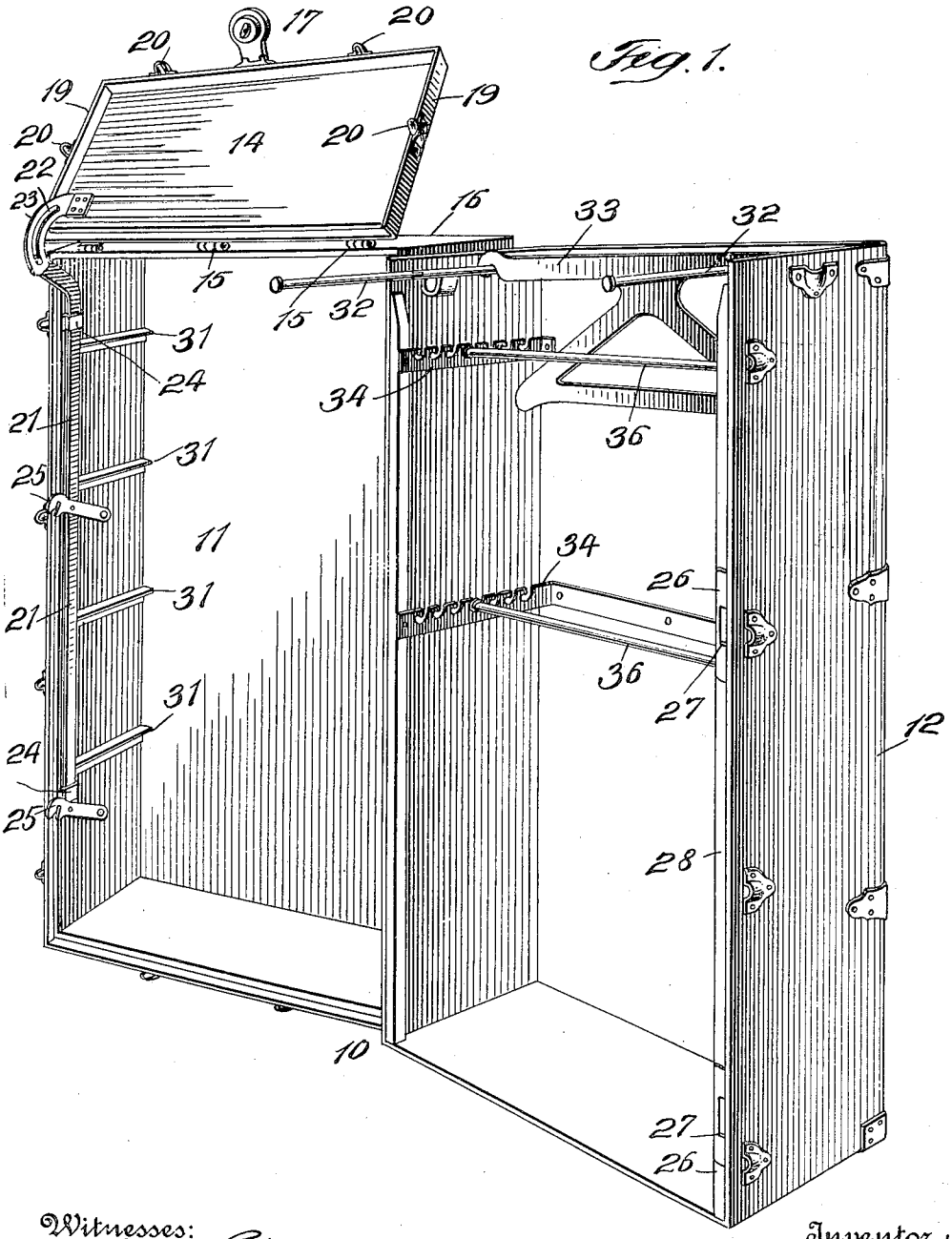

Witnesses:
Julius H. Smith.
Arthur Marion.

Inventor:
John H. Bartlett, junior,
By his Attorney,
Charles C. Gill.

J. H. BARTLETT, JR.

TRUNK.

APPLICATION FILED AUG. 5, 1914.

1,203,169.

Patented Oct. 31, 1916.

3 SHEETS—SHEET 2.

Fig. 2.

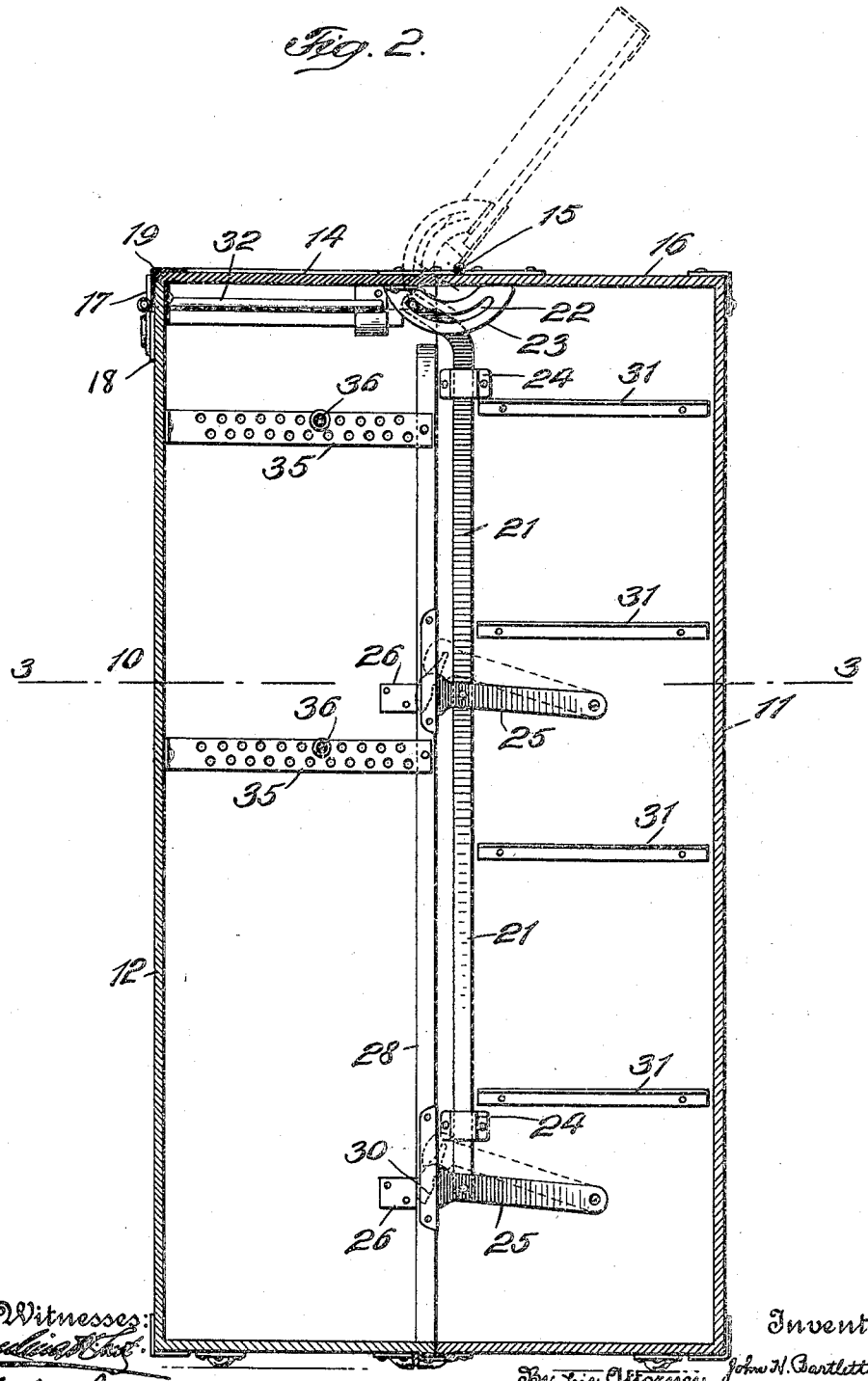

Witnesses:

Arthur Marion.

Inventor:

By his Attorneys, John H. Bartlett, junior,

Charles C. Gill

J. H. BARTLETT, JR.

TRUNK.

APPLICATION FILED AUG. 5, 1914.

1,203,169.

Patented Oct. 31, 1916.

3 SHEETS—SHEET 3.

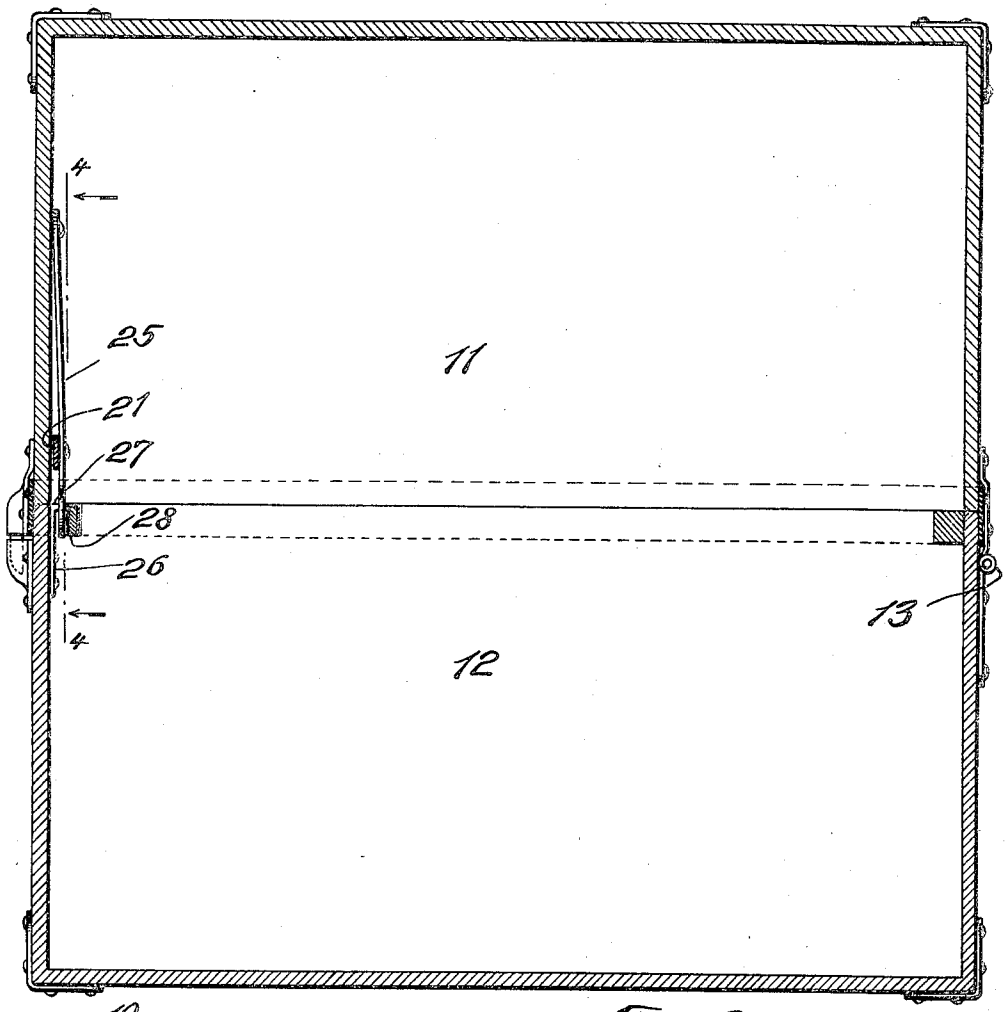

Fig. 3.

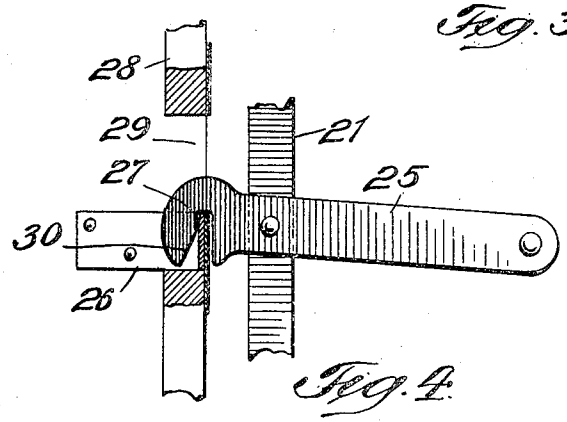

Fig. 4.

Witnesses:
Julius N. Goetz.
Arthur Marion.

Inventor:
John H. Bartlett, junior,
By his Attorney,
Charles C. Gill.

UNITED STATES PATENT OFFICE.

JOHN H. BARTLETT, JR., OF ORANGE, NEW JERSEY, ASSIGNOR TO THE OSHKOSH TRUNK COMPANY, OF OSHKOSH, WISCONSIN, A CORPORATION OF WISCONSIN.

TRUNK.

1,203,169. Specification of Letters Patent. Patented Oct. 31, 1916.

Application filed August 5, 1914. Serial No. 855,083.

To all whom it may concern:

Be it known that I, JOHN H. BARTLETT, Jr., a citizen of the United States, and a resident of Orange, in the county of Essex and State of New Jersey, have invented certain new and useful Improvements in Trunks, of which the following is a specification.

The invention pertains more particularly to what are classed as wardrobe trunks, these trunks comprising two hinged together parts of preferably about equal capacity, one part or section being adapted for wardrobe purposes and the other part or section usually containing drawers, the trunk when in use being stood on end in an open condition and serving as a wardrobe and bureau. For convenience I may term the section of the trunk to contain the drawers as the body of the trunk or bottom section when the trunk is turned over into a horizontal position and the section containing the wardrobe as a cover or upper section.

In accordance with my invention the upper end of the wardrobe section of the trunk, considering the trunk as standing on end and in an open position, is open; and the upper end of the drawer section of the trunk, still considering the trunk standing in an open position, is permanently closed by a rigid end piece, and to the edge of this end piece is hinged a cover adapted when the two sections of the trunk are closed together to fold down upon and close the upper end of the wardrobe section. This cover is provided with a lock and proper dowels so that when closed down on the wardrobe section it may be locked in closed position, the only external lock on the trunk being the lock on this cover.

The cover referred to is utilized in connection with novel locking means for locking the drawer and wardrobe sections together at several points along the height of the trunk, these edge locking means passing into operative position automatically with the closing of the aforesaid cover and becoming unlocked or moved to their inoperative position upon the opening of the said cover. The drawers or receptacles in the drawer section of the trunk will be of any suitable form and construction and adapted to slide inwardly and outwardly in a familiar way, and in the wardrobe section of the trunk I provide hangers, rods for supporting the same, and special means for efficiently holding the hanging portions of the garments compactly within said section.

The invention will be fully understood from the detailed description hereinafter presented, reference being had to the accompanying drawings, in which:

Figure 1 is a perspective view of a wardrobe trunk embodying my invention, the trunk being shown as standing on end in its natural position when in use, with the two sections of the trunk opened outwardly from each other and the hinged cover connected with the drawer section turned upwardly; Fig. 2 is a central vertical transverse section through the trunk shown in its closed position, the hinged cover connected with the drawer section of the trunk being shown by dotted lines in its open position, and the two positions of the locking means for the adjoining edges of the trunk sections being shown by full lines and dotted lines respectively: Fig. 3 is an enlarged horizontal section through the trunk, with the sections thereof in their closed position, taken about on the dotted line 3—3 of Fig. 2, and Fig. 4 is a vertical section through a portion of the same taken on the dotted line 4—4 of Fig. 3.

In the drawings 10 designates the trunk as a whole, 11 the drawer section thereof, 12 the wardrobe section secured by hinges 13 along one edge to the adjacent edge of the drawer section, and 14 a cover hinged, as at 15, to the free edge of the permanent end 16 for the drawer section 11.

The trunk sections 11, 12 are of practically the same dimensions, and the cover 14 when said sections are closed together, as in Fig. 2, may be folded down upon and caused to close the open upper end of the wardrobe section 12. The cover 14 is provided with a lock 17 and the upper front side of the wardrobe section 12 is provided with a keeper 18 to receive the bolt of the lock 17. The cover 14 is also provided with a rim 19 which passes downwardly upon the upper edges of the wardrobe section 12, and hence when the trunk sections are closed together and the cover 14 is turned downwardly upon the wardrobe section 12, the rim 19 encompasses the upper edge portions of said section 12 and then when the lock 17 is secured, the upper end of the trunk becomes entirely closed and bound together. The lock 17 is

the only exposed lock on the trunk, and it may always be manipulated while the trunk is standing on end and while the owner of the trunk is standing substantially upright. The cover 14 is also provided with dowels 20 of customary character to enter sockets on the wardrobe section 12 and thereby aid in creating a durable construction at the upper end of the trunk.

The trunk having a wardrobe section 12 open at the top and a section 11 closed at the top and having a hinged cover 14 secured to the free edge of the rigid upper end of the section 11, to close over upon and be locked to the wardrobe section 12, constitutes what I regard as an important feature of my invention.

Within the outer edge of the drawer section 11 I provide a vertical bar 21 having an outwardly deflected upper end carrying a pin within an arc slot 22 formed in a curved arm 23, which is rigidly fastened to the inner surface of the cover 14. The bar 21 is adapted to slide vertically and is retained in staple guides 24 fastened to the side of the section 11, and said bar 21 is drawn upwardly by the cover 14 when said cover is opened upwardly or turned to the position shown in Fig. 1, and said bar is depressed or pushed downwardly by the cover 14 when said cover is closed upon the wardrobe section 12 or turned downwardly to the position shown by solid lines in Fig. 2. The bar 21 is a locking bar and it has secured to it a plurality of locking-hooks 25, these hooks being preferably pivotally secured to the bar and also to the adjacent side of the drawer section of the trunk. When the cover 14 is opened upwardly the hooks 25 are turned upwardly from their coöperating locking means, hereinafter mentioned, and when the bar 21 is moved downwardly, said hooks are moved to operative position to lock the two sections of the trunk together. Within the outer edge portion of the wardrobe section 12 are secured a series of angle plates 26 having a portion 27 in position to be engaged by the outer ends of the hooks 25, as shown in Fig. 3, the customary slat 28 along the outer edge of the wardrobe section being recessed, as at 29, to admit the outer ends of the hooks 25 to the vertical laterally extending portions 27 of the plates 26. When the two sections 11, 12 of the trunk are closed together or to the position shown in Fig. 2, the closing downwardly of the cover 14 serves to depress the bar 21 and effects the closing downwardly of the outer ends of the locking-hooks 25 upon the members 27 of the plates 26, and so long as the cover 14 remains in its closed position, wherein it will be locked, the series of hooks 25 maintain their locking relation to the plates 26 and secure the trunk along the adjacent edges of the wardrobe and drawer sections. When the trunk is in fully closed condition the outer ends of the hooks 25 secured to the drawer-section are within the recesses 29 and in locking engagement with the plates 26 of the wardrobe-section and at the same time the cover 14 is locked in closed position. When it is desired to open the trunk the cover 14 is unlocked and turned upwardly and the sections 11, 12 are turned outwardly from each other or to the position shown in Fig. 1, the opening of the cover 14 serving to free all of the locking hooks 25 or, in other words, to release the locking means carried by one section from the coöperating locking means carried by the other section. While the trunk in its closed condition is secured by the lock 17, it is also secured by the plurality of locking hooks or the like 25, but only one key, to-wit, that required for the lock 17, is required for the entire trunk, since the other locking means are within the interior of the trunk and operated by the opening and closing of the cover 14. The outer ends of the hooks 25 are of special form in that said ends are not only recessed vertically, but each is formed with an inclined edge 30 (Fig. 4), which edges in case the trunk should contain a considerable quantity of clothing so as not to readily close, will engage the edges of the members 27 of the plates 26 and, upon the turning downwardly of the cover 14, operate to draw the free edges of the trunk sections toward each other, this making it very convenient to close the trunk even though the latter should contain a considerable quantity of garments. I prefer to pivot the locking-hooks 25 both to the bar 21 and to the side of the trunk, but I do not limit my invention to that feature of the construction, since the hooks may be rigidly secured upon said bar and not connected with the side of the trunk. The essential part of my invention in respect to the locking of the trunk sections together resides in the provision of locking means for the cover 14 and interior locking means for the free edges of the trunk sections 11, 12 operable from and by the opening and closing of the cover 14.

Upon the sides of the drawer section 11 will be provided a series of drawer-slides or cleats 31 of any suitable character adapted to receive drawers or like receptacles customarily employed in one section of wardrobe trunks.

The wardrobe section 12 is provided with sectional rods 32 to receive and support suitable hangers 33 for clothing, the rods 32 and hangers 33 being of customary or of any suitable character. Upon the sides of the wardrobe section 12 I secure suitable metal bars 34, 35, said bars being opposite to each other and the bars 34 being formed with undercut recesses, as shown in Fig. 1, and

the bars 35 with holes, as shown in Fig. 2, two series of the holes in staggered order preferably being employed. The bars 34, 35 are used in connection with transverse rods 36 which are employed to compress the hanging garments within the wardrobe section against the solid inner surface of said section. I regard the undercut recesses in the bars 34 as desirable, whether employed on one or both of the bars 34, bars 35, but I preferably employ bars 35 having holes therein in connection with the bars 34 for receiving the rods 36, since I have found that with the construction just explained and as illustrated in the drawings, the user of a trunk may with great convenience and with the employment of one hand readily apply the rods 36 to correct position to very firmly hold the garments within the wardrobe section. In the employment of the rods 36 the user of the trunk after the garments have all been placed on the hangers will insert one end of a rod 36 into one of the holes of the bar 35 and then after pressing the other end of the rod inwardly as far as possible insert that end of the same into one of the undercut recesses of the bar 34. In applying the end of the rod 36 to the bar 35, said end should be pressed inwardly against the garments and inserted in one of the holes of the bar 35, so that when the other end of the rod 36 is forced inwardly to be placed in engagement with a recess of the bar 34, said rod may very firmly engage the garments and hold the entire body thereof in compact condition within the wardrobe section.

I have constructed my trunks with recessed bars 34 at both sides of the wardrobe section, but have found that with such construction a person is apt to hold one of the rods 36 with both hands and press the rod inwardly within the hanging garments and then attempt to introduce both ends of the rod to the recesses of the bars, and while the result was beneficial to some extent, in that the recesses of the bars were undercut, the garments were not so compactly held as when the trunks were constructed in accordance with the present illustration showing undercut recessed bars 34 to coöperate with apertured bars 35, since in the present construction one end of the rod 36 is pressed inwardly and inserted in one of the holes of the bar 35 and then the other end portion of the bar is forced inwardly as far as may be and introduced in one of the undercut recesses of the bar 34, the whole operation being capable of being accomplished with one hand. I preferably arrange two rows of holes in the bars 35, these holes being disposed in staggered order with respect to each other so as to be able to get a close adjustment of the rods 36 against the garments, it being highly desirable that the garments be held compactly by said rods. There may be as many bars 34, 35 and rods 36 as may be required in accordance with the height of the trunk.

What I claim as my invention and desire to secure by Letters Patent, is:

1. A trunk comprising three connected sections, two of said sections being provided with locking members adapted when engaged to effect the locking of said two sections together, and means connecting the locking member on one of said two sections with the third section, whereby said last named locking member will be moved by said third section into and out of locking engagement with said other locking member during the movement of said third section.

2. A trunk comprising three connected sections, two of said sections being provided with locking members adapted when engaged to effect the locking of said two sections together, and an endwise movable actuating member connecting the locking member on one of said two sections with the third section, whereby said last named locking member will be moved by said third section into and out of locking engagement with said other locking member during the movement of said third section.

3. A wardrobe trunk comprising two vertical hinged together sections, one of said sections having a hinged cover to be closed down upon the other section when the two sections are closed together, interlocking means at the adjacent vertical free edges of said sections, and means operable from said cover for engaging said interlocking means with each other when the cover is closed and disengaging the same when the cover is opened, said interlocking means comprising a vertically slidable bar in one section and connected with said cover, a series of hooks connected with said bar, and a series of plates on the opposing section to be engaged by said hooks.

4. A wardrobe trunk comprising two vertical hinged together sections, one of said sections having a hinged cover to be closed down upon the other section when the two sections are closed together, interlocking means at the adjacent vertical free edges of said sections, and means operable from said cover for engaging said interlocking means with each other when the cover is closed and disengaging the same when the cover is opened, said interlocking means comprising a vertically slidable bar in one section and connected with said cover, a series of hooks connected with said bar, and a series of plates on the opposing section to be engaged by said hooks, said hooks being vertically recessed to engage said plates and having inclined outer surfaces to operate as wedges in drawing the two sections of the trunk together.

5. A wardrobe trunk comprising two ver-

tical hinged together sections, one of said sections having a hinged cover to be closed down upon the other section when the two sections are closed together, interlocking means at the adjacent vertical free edges of said sections, and means operable from said cover for engaging said interlocking means with each other when the cover is closed and disengaging the same when the cover is opened, said interlocking means comprising a vertically slidable bar connected with said cover, a series of hooks pivotally connected with said bar and with the adjacent side of the trunk section, and a series of plates on the opposing section to be engaged by said hooks.

6. A wardrobe trunk comprising two vertical hinged together sections, one of said sections having a hinged cover to be closed down upon the other section when the two sections are closed together, interlocking means at the adjacent vertical free edges of said sections, and means operable from said cover for engaging said interlocking means with each other when the cover is closed and disengaging the same when the cover is opened, said interlocking means comprising a vertically slidable bar in one section having an outwardly deflected upper end provided with a pin, a rigid arm connected with said cover and having an arc slot engaging said pin, a series of hooks connected with said bar, and a series of plates on the opposing section to be engaged by said hooks.

7. A trunk comprising three connected sections, two of said sections being provided with locking members adapted when engaged to effect the locking of said two sections together, said locking members being in position to be engaged one by the other when said two sections are closed together, and means operable by the third section for engaging said locking members with each other when said third section is moved into closed position.

8. A trunk comprising three hinged together sections, two of said sections being provided with locking members adapted when engaged to effect the locking of said two sections together, one of said locking members being provided with an inclined part adapted when moved into locking engagement with said other locking member to act to draw said two sections into close contact with each other, and means connecting the locking member on one of said two sections with said third section, whereby said last named locking member will be moved by said third section into and out of locking engagement with said other locking member during the movement of said third section.

9. A trunk comprising two hinged together sections, a plurality of fixed locking members on one of said sections, an endwise movable bar, a plurality of locking members on said bar, said locking members on said bar being provided with inclined parts acting when moved into engagement with said fixed locking members to draw said sections together, and a member pivotally mounted on one of said sections and connected with said bar and adapted when moved to impart an endwise movement to said bar and cause the locking members on the latter to be moved into and out of locking engagement with said fixed locking members.

10. In a trunk, the combination of a plurality of trunk sections, a rod mounted to slide on one of the sections and provided with hook shaped locking devices adapted to engage another of said sections to lock said sections together, a third section, independent locking means therefor, and lock operating connections adapted to transmit motion of the third section in either direction to said hook shaped locking devices.

Signed at New York city, in the county of New York and State of New York, this 4th day of August, A. D. 1914.

JOHN H. BARTLETT, JUNIOR.

Witnesses:

J. R. FRITH,

CHAS. C. GILL.