US00RE39019E

(19) United States
(12) Reissued Patent
Tully et al.

(10) Patent Number: US RE39,019 E
(45) Date of Reissued Patent: Mar. 21, 2006

(54) **ANGULAR ORIENTATION CONTROL SYSTEM FOR FRICTION WELDING**

(75) Inventors: **Lowell R. Tully**, Elkhart, IN (US); **Stephen A. Johnson**, South Bend, IN (US); **Dave Konieczny**, Union Mills, IN (US); **Stephen R. Estes**, South Bend, IN (US)

(73) Assignee: **S.S.D. Control Technology, Inc.**, South Bend, IN (US)

(21) Appl. No.: **09/759,823**

(22) Filed: **Jan. 12, 2001**

(Under 37 CFR 1.47)

Related U.S. Patent Documents

Reissue of:
(64) Patent No.: **5,858,142**
Issued: **Jan. 12, 1999**
Appl. No.: **08/987,493**
Filed: **Dec. 9, 1997**

(60) Provisional application No. 60/038,332, filed on Feb. 27, 1997.

(51) **Int. Cl.**
B29C 65/06 (2006.01)

(52) **U.S. Cl.** **156/73.5**; 156/64; 156/580; 228/114.5

(58) **Field of Classification Search** 156/64, 156/73.5, 358, 580; 264/68; 228/112.1, 113, 228/114.5, 2.1, 2.3
See application file for complete search history.

(56) **References Cited**

U.S. PATENT DOCUMENTS

4,552,609 A * 11/1985 Larsen 156/358
4,552,612 A * 11/1985 Fortuna et al. 156/494
4,584,037 A * 4/1986 Fortuna et al. 156/69
4,741,788 A * 5/1988 Clark et al. 156/64
4,743,331 A * 5/1988 Nuttall et al. 156/358
5,064,485 A * 11/1991 Smith et al. 156/69
5,108,539 A * 4/1992 Kelley et al. 156/580
5,137,166 A * 8/1992 Unger et al. ..... 156/73.5 X
5,152,855 A * 10/1992 Jansman et al. 156/73.5

* cited by examiner

Primary Examiner—James Sells
(74) *Attorney, Agent, or Firm*—Marshall, Gerstein & Borun LLP

(57) **ABSTRACT**

A method of friction welding first and second parts together at an angular orientation relative to each other includes the steps of mounting the first part in a spindle for axial rotation and the second part in a non-rotatable holder. The spindle is then rotated and the angular orientation of the first part relative to the second part is determined at any specific time. The holder is moved toward the spindle to bring the second part into frictional contact with the first part at a selected one of the specific times that the angular orientation is determined. Accordingly, due to frictional contact, the respective contacting surface of the parts are melted. The speed of the rotation of the spindle is then decreased and the holder is moved toward the spindle to forcibly urge the first and second parts together at the contacting surface. Rotation of the spindle is stopped at a specific determined angular orientation of the first part relative to the second part while continuing to forcibly urge the parts together to allow cooling and fused solidification of the contacting surfaces.

25 Claims, 7 Drawing Sheets

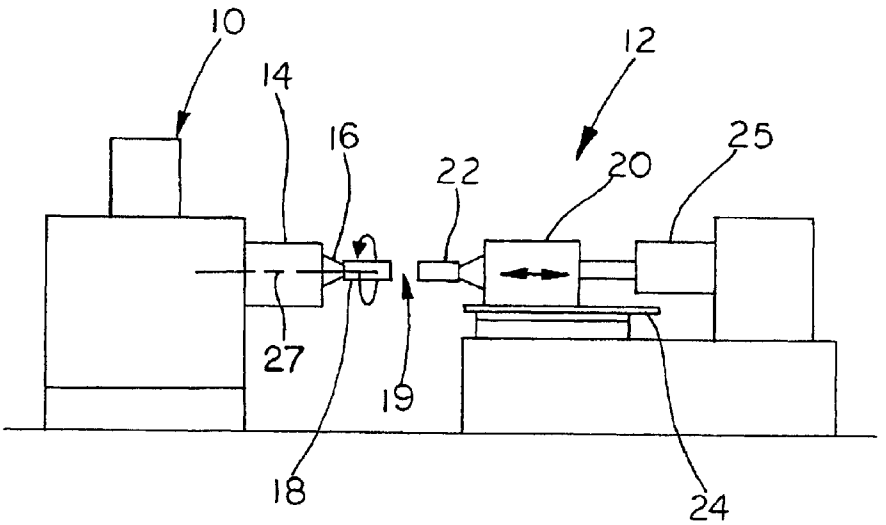

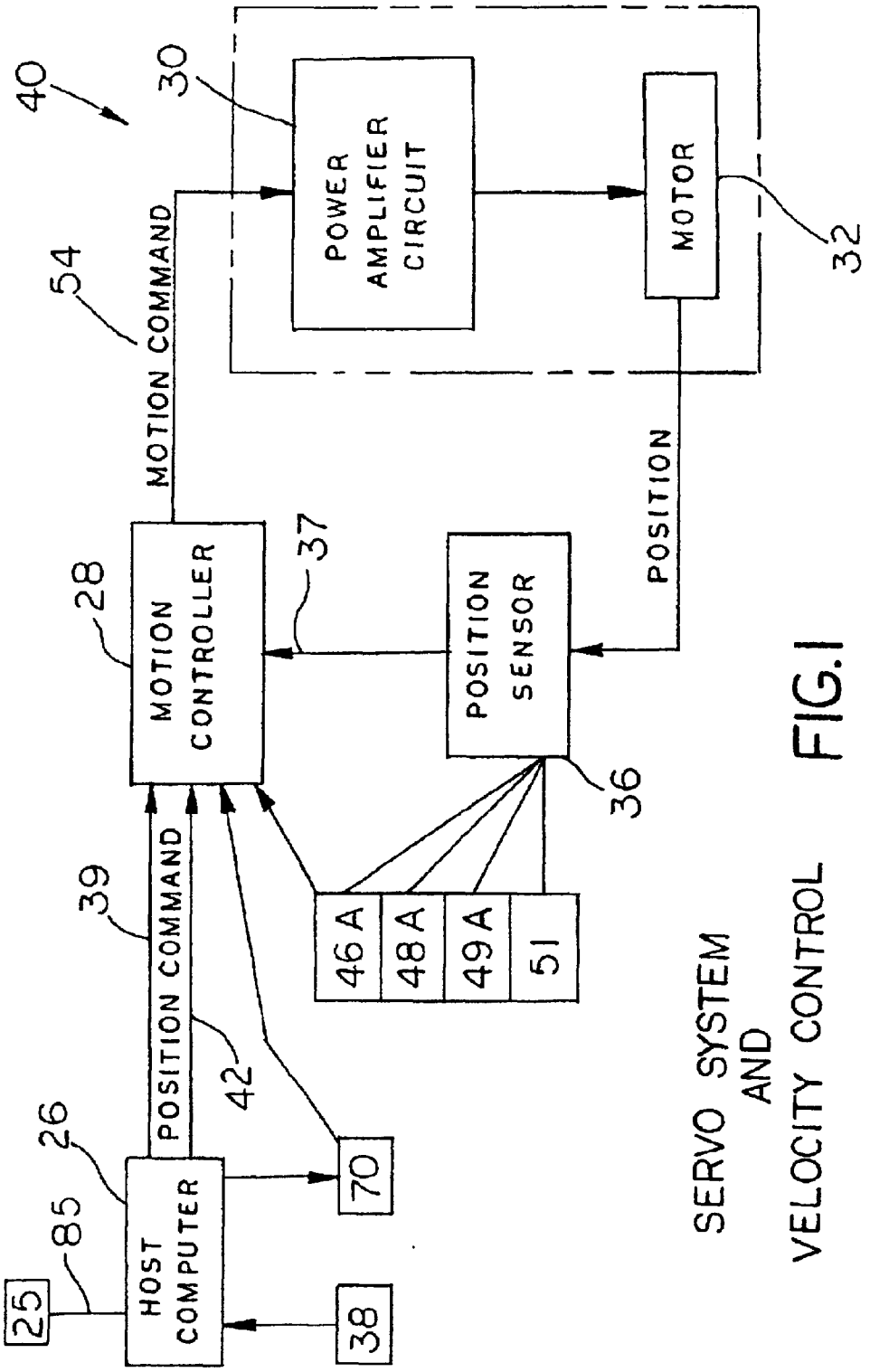

FIG. 1

SERVO SYSTEM AND VELOCITY CONTROL

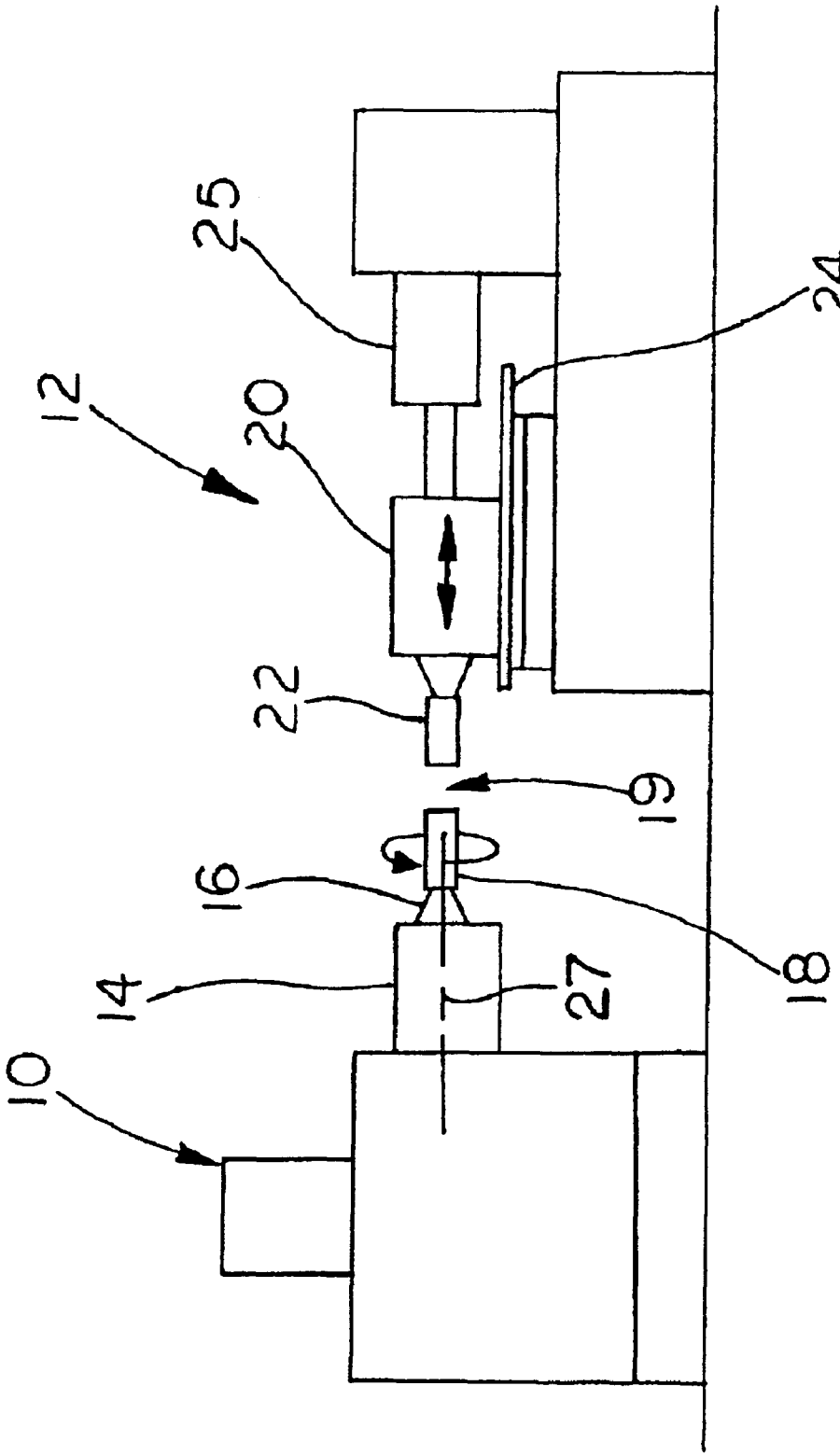

FIG.2

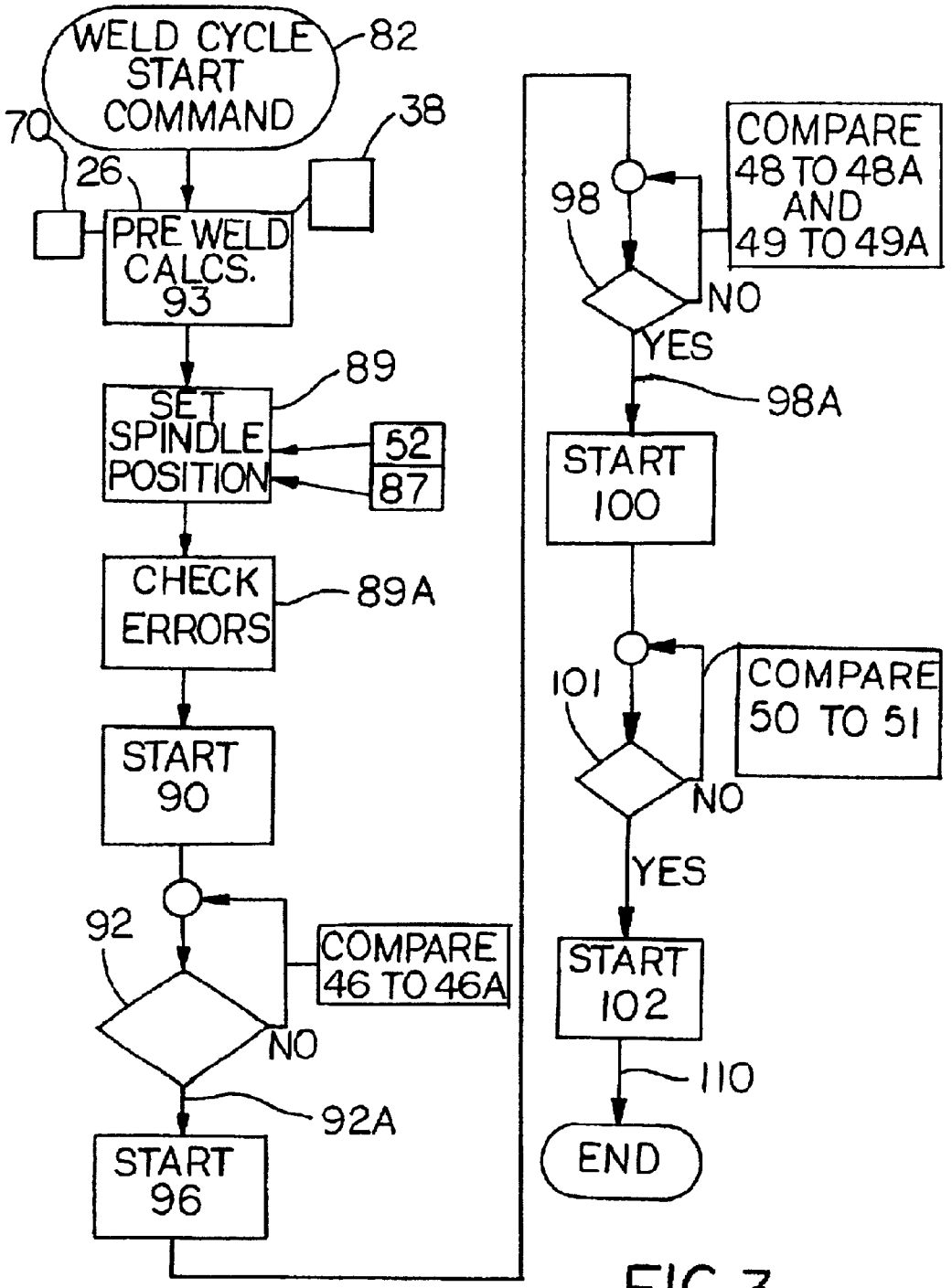
WELD CYCLE START COMMAND
82
70
26
38
PRE WELD CALCS. 93
89
SET SPINDLE POSITION
52
87
CHECK ERRORS
89A
START 90
92
COMPARE 46 TO 46A
NO
92A
START 96
98
COMPARE 48 TO 48A AND 49 TO 49A
NO
YES
98A
START 100
101
COMPARE 50 TO 51
NO
YES
START 102
110
END

FIG.3

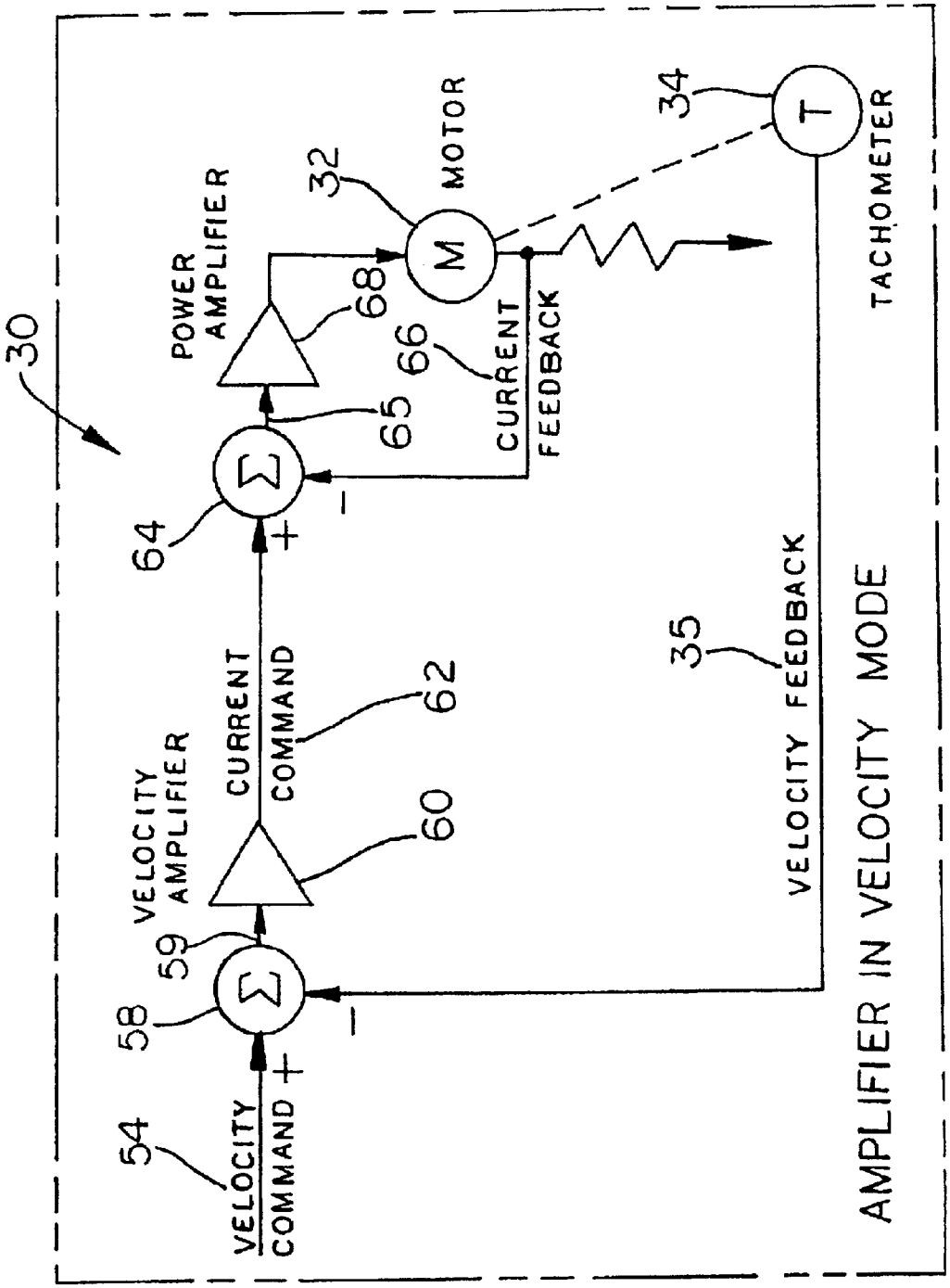
30
POWER AMPLIFIER
68
32
MOTOR
M
34
T
TACHOMETER
66
CURRENT FEEDBACK
65
64
Σ
+
−
CURRENT COMMAND
62
VELOCITY AMPLIFIER
60
59
58
Σ
+
−
54
VELOCITY COMMAND
35
VELOCITY FEEDBACK
AMPLIFIER IN VELOCITY MODE

FIG.4

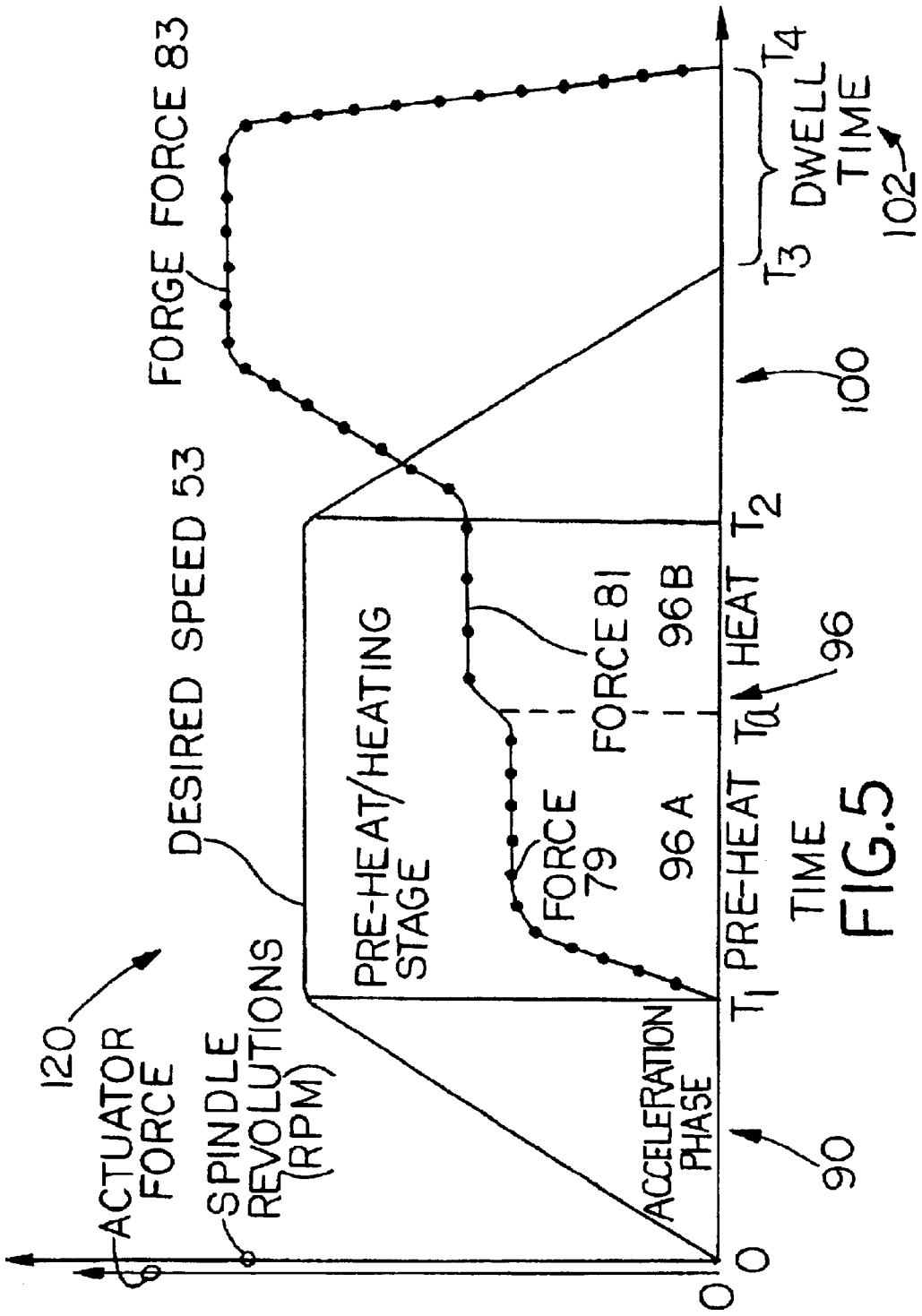
FORGE FORCE 83
DESIRED SPEED 53
PRE-HEAT/HEATING STAGE
FORCE 79
FORCE 81
96 A
96 B
ACCELERATION PHASE
PRE-HEAT
HEAT
TIME
DWELL TIME
ACTUATOR FORCE
SPINDLE REVOLUTIONS (RPM)
0
0
T_1
T_a
T_2
T_3
T_4
90
96
100
102
120

FIG.5

INPUT REGISTER 38

REFERENCE NUMBER	DESCRIPTION
6	MATERIAL CONSTANT (mC)
8	GEOMETRIC CONSTANT (gC)
42	DESIRED FINAL POSITION
73	MATERIAL TYPE
75	WORKPIECE WEIGHT
77	GEOMETRIC PROPERTIES
76	LENGTH OF FIRST WORKPIECE
78	LENGTH OF SECOND WORKPIECE
80	DESIRED LENGTH OF FINISHED PRODUCT

FIG. 6

OUTPUT REGISTER 70

REFERENCE NUMBER	DESCRIPTION
39	DESIRED ANGULAR POSITION
44	DESIRED TOTAL SPINDLE ROTATIONS
46	DESIRED ACCELERATION ROTATIONS
48	DESIRED PRE-HEAT ROTATIONS
49	DESIRED HEATING ROTATIONS
50	DESIRED FORGE ROTATIONS
51	ACTUAL FORGE ROTATIONS
53	DESIRED ROTATIONAL SPEED
61	REQUIRED TIME AT PRE-HEAT FORCE LEVEL
63	PRE-HEAT DISTANCE
65	REQUIRED TIME AT HEAT FORCE LEVEL
67	HEAT DISTANCE
69	REQUIRED TIME AT FORGE FORCE LEVEL
71	FORGE DISTANCE
72	ROTATIONAL MOMENT OF INERTIA
74	TARGET UPSET DISTANCE
79	PRE-HEAT FORCE LEVEL
81	HEAT FORCE LEVEL
83	FORGE FORCE LEVEL
120	DESIRED SPINDLE PROFILE

FIG.7

ANGULAR ORIENTATION CONTROL SYSTEM FOR FRICTION WELDING

Matter enclosed in heavy brackets [ ] appears in the original patent but forms no part of this reissue specification; matter printed in italics indicates the additions made by reissue.

CROSS-REFERENCE TO RELATED APPLICATION

This is a continuation of application Ser. No. 60/038,332 filed Feb. 27, 1997.

The present invention relates generally to a control system for use on friction welding machines for controlling the final angular orientation of two workpieces relative to each other that have been welded together using the friction welding process.

APPENDIX

A software computer program forming an appendix consisting of 5 pages is included as part of the specification.

IDENTIFICATION OF COPYRIGHT

A portion of the disclosure of this patent document contains material which is subject to copyright protection. The copyright owner has no objection to the facsimile reproduction by anyone of the patent document or the patent disclosure as it appears in the public Patent and Trademark Office patent file or records, but otherwise reserves all copyright rights whatsoever.

BACKGROUND OF THE INVENTION

Friction welding machines are generally well known in the art. In a friction weld, heat is generated by rubbing two workpieces together until the material at the interface between the two pieces reaches a plastic state. The two workpieces are then forged together under pressure to finalize the weld and expel gases, thus forming a single component having an integral bond. A friction weld can typically be formed in a very short period of time compared to more conventional are welding methods, and thus friction welds are less labor intensive, more uniform and more cost effective than conventional methods. Friction welders are especially well suited for welding round bars or tubes to each other, or for welding round workpieces to flat plates, disks or gears. The friction welding process is frequently used to produce automotive drive shafts, automotive air bag canisters, gear shafts and engine valves, as well as other applications in which a high quality weld is required.

On a friction welder, one of the workpieces is mounted to a rotating chuck assembly while the other workpiece is fixed in a stationary chuck or tailstock. A drive motor accelerates the rotating chuck to a predetermined speed, and the parts are then forced together with the friction induced heat producing a material flux. The pieces are then forged together under pressure, which expels gas and produces a fine grain weld.

Friction welders are generally divided into two categories, inertia friction welders and the more conventional direct drive friction welders. The rotating chuck on inertia friction welders is drivingly connected to a flywheel. A drive motor accelerates the flywheel to speed, the drive motor is then disconnected, and the kinetic energy stored in the flywheel is converted to heat energy as the two workpieces are forced together under extremely high pressure. The rotating chuck

rapidly decelerates to a stop and the weld is formed at the interface between the two workpieces. Inertia friction welding has a number of inherent drawbacks which makes it unsuitable for many applications. First, the flywheel bearings gradually heat up, which depletes the available kinetic energy because energy is lost through increased friction. Second, due to the very high forge pressure required, inertia welding is unsuitable for thin walled tubes and many soft metals, such as aluminum. In general, the quality and uniformity of inertia friction welds are hard to control.

On direct drive friction welders, the drive motor used to rotate one of the workpieces remains engaged until the weld is complete and the rotating workpiece comes to a halt. Unfortunately, the final orientation of the rotating workpiece relative to the stationary workpiece is not easily controlled. In many applications, it is critical that the two workpieces be welded together in a predetermined angular orientation relative to one another. For example, the yoke at one end of an automotive drive shaft must be perpendicular to the yoke at the other end of the drive shaft; otherwise, the drive line components will be prone to premature failure. Similarly, on many gear shafts and other components the gear at one end of the shaft must be precisely located relative to another gear or cam lobe on the shaft.

In order to achieve precise angular orientation a number of approaches have been attempted. For example, one prior art approach uses a defined braking mechanism which applies a braking force as the rotating spindle decelerates and approaches the desired final orientation which in turn is conveyed to the rotating spindle via an electronic signal or mark. Usually however, due to variations in the braking mechanism and other variables, the deceleration of the spindle is not uniform. Frequently, the brake must be released and the drive motor must be temporarily re-engaged in order to force the spindle to the desired location. Thus the rate of deceleration, as well as the final angular position of the rotating workpiece, is relatively uncontrolled. In many instances as the spindle approaches the desired stopping point, it becomes clear that the spindle has or will stop short of the desired alignment mark, while at other times the spindle will completely pass the mark. If the spindle stops short, the drive motor is re-engaged and the spindle is accelerated and driven to the mark. If the spindle overshoots the mark, the drive motor is re-engaged and the spindle is turned an extra rotation in order to reach the mark again. Unfortunately, in each instance the spindle has slowed significantly and the weld has already begun to cool and the material has begun to harden. Any subsequent accelerations and rotations of the spindle cause microfractures in the crystal structure of the material, resulting in a lower quality, high risk weld. Furthermore, the defined braking method is not accurate enough for many applications. In general, the defined braking method is unsuitable for applications in which the final angular orientation is critical and is also unsuitable for many aluminum welds, aircraft quality welds, air bag welds and other safety related welds.

Accordingly, there exists a need for a control system for friction welders that can control the final orientation of one workpiece relative to the other, and that consistently produces a uniform high quality weld suitable for use on aircraft and safety related applications and on a wide variety of material types.

SUMMARY OF THE INVENTION

The control system according to the present invention allows two workpieces to be welded together at a desired

angular orientation. The control system of the present invention allows two pieces to be welded together with greater precision and accuracy than is possible with any of the prior art control methods. The control system constantly monitors the angular orientation of the spindle at any given point in time, and compares the present spindle orientation with a predetermined desired spindle orientation that has been calculated by a host computer. The computer calculates the desired orientation of the rotating spindle at any given moment during the weld process, including during the acceleration phase, the burn-off and weld phases, and through the deceleration phase until the spindle stops at the predetermined desired final angular orientation. The programmable host computer determines and calculates all of the critical weld parameters, depending on the material properties, weld characteristics, thickness, and rotating mass of the pieces to be welded together. Based upon this information, the computer generates a desired spindle profile curve which becomes a reference point for the desired speed and the desired angular position of the rotating spindle at every point during the weld process. Using the profile curve, a motion controller connected to and controlled by the central computer constantly compares the actual spindle orientation to the desired spindle orientation throughout the process, and makes the necessary corrections to ensure that the actual orientation conforms to the desired orientation.

A motion controller is operatively connected to the host computer, and generates a motion command or speed signal, which is communicated to a drive motor that drives the spindle. A position sensor is connected to the rotatable spindle, and a tachometer is connected to the drive motor. The position sensor and the drive motor communicate constant feedback to the motion controller regarding the present position of the rotatable spindle and the present speed of the drive motor. The present orientation is compared to the desired orientation for that particular moment in the weld cycle, and the motion controller constantly makes adjustments to the spindle speed, either by increasing or decreasing the speed, in order to conform the actual spindle orientation to the desired spindle orientation.

The control system employs a proportional-integral-derivative controller ("PID controller"), which enables the control system to respond very quickly to differences between the actual and the desired spindle orientation. The control system can thus respond very quickly to increases or decreases in friction between the two workpieces as the materials heat up and as the weld is being formed. At any given moment, parameters indicative of the present spindle orientation and the present spindle speed are sent to the motion controller, which compares the actual orientation to the desired orientation. The motion controller then makes any necessary corrections and varies the speed of the drive motor accordingly. Thus, by making the system more responsive, the angular orientation of the rotatable spindle at any given moment can be precisely controlled as can the rotational speed of the spindle. Each of these variables are constantly measured and compared to target values calculated and communicated by the host computer to the PID controller.

Accordingly, it is an object of this invention to provide an improved control system for friction welders.

It is another object of this invention to provide a control system for friction welders that allows two workpieces to be welded together in a precise angular orientation.

A further object of this invention is to provide a control system for friction welders that enables two workpieces to be welded together with much more precision than is possible in known existing friction welding methods.

These and other objects to the invention will become readily apparent to those skilled in the art upon a reading of the following description.

BRIEF DESCRIPTION OF THE DRAWINGS

FIG. **1** is a schematic illustration of a friction welding control system incorporating the teachings of the present invention;

FIG. **2** is an elevational view of a friction welding machine having the control system of the present invention installed thereon;

FIG. **3** is a flow chart of the main control program used to control the system illustrated in FIGS. **1** and **2**;

FIG. **4** is a schematic diagram of the amplifier circuit of the control loop shown in FIG. **1**, which generates continuous feedback regarding the actual speed and position of the rotating spindle;

FIG. **5** is a spindle profile curve in graphic form which indicates the desired spindle speed as a function of time during the entire weld process;

FIG. **6** is a tabular representation of the input register, which contains the desired weld parameters and the material variables input by the operator for processing by the host computer; and

FIG. **7** is a tabular representation of the output register, which represents each of the program parameters calculated by the host computer.

DETAILED DESCRIPTION OF THE INVENTION

The embodiment herein described is not intended to be exhaustive or to limit the invention to the precise form disclosed. It is chosen and described to explain the principles of the invention and its application and practical use to best enable others skilled in the art to follow its teachings.

Referring now to the drawings, a control system for a friction welder according to the present invention is generally indicated by the reference numeral **10**. Control system **10** is operatively connected to and controls the operation of a friction welding device **12**. Friction welder **12** includes a rotating spindle **14**, having a chuck assembly **16** for securing a first workpiece **18**, and a non-rotating chuck assembly or tailstock **20** for holding a second workpiece **22**. Typically, tailstock **20** is slidably mounted to a track or slide **24**. An actuator **25** enables tailstock **20** holding second workpiece **22** to move towards spindle **14** holding first workpiece **18** in a direction parallel to the axis **27** of rotating spindle **14**, thus enabling first and second workpiece's **18**, **22** to be brought into contact with each other.

As shown in FIGS. **1** and **4**, control system **10** includes a central or host computer **26** which is operatively connected to a motion controller **28** which in turn is operatively connected to a power amplifier **30**, a drive motor **32** which includes a tachometer **34**, and position sensor **36**. Motion controller **28**, power amplifier **30**, motor **32**, tachometer **34**, and position sensor **36** together form a control loop **40**. Drive motor **32** is preferably a variable speed drive motor commonly employed in the art, and tachometer **34** and position sensor **36** are likewise commonly employed in the art. Preferably, position sensor **36** is calibrated to measure the angular position of the spindle as it rotates about its axis in increments of a rotation, and position sensor converts the detected position to an actual position command **37**. Position

sensor **36** also tracks the actual number of rotations during each of the weld phases, such as the actual acceleration, pre-heat, heat and forge rotations **46Λ**, **48Λ**, **49Λ** and **51** (see FIG. **1**), respectively, as discussed below. Preferably, each complete rotation of the spindle can be broken into a thousand discrete angular positions. Based on a number of material variables input by the operator, such as the material weight, dimensions, and thickness of workpieces **18** and **22**, host computer **26** generates a desired spindle profile **120** (shown in FIG. **5**) which represents the desired rotational speed **53** of spindle **14** at any moment during the weld cycle. The desired final angular position **42** (see FIG. **6**) of the first workpiece **18** relative to the second workpiece **22** about their common rotating axes is input into the computer via input register **38** and is communicated to motion controller **28**. The operator inputs the material variables mentioned above into the host computer **26**, which then calculates the desired total number of spindle rotations **44** (see FIG. **7**) required between the actual starting position and the desired final position **42**. The total number of desired rotations **44** includes the desired acceleration rotations **46**, the desired pre-heat rotations **48**, the desired heat rotations **49**, and the desired forge rotations **50**.

Tachometer **34** generates a signal which indicates the actual speed **35** (see FIG. **4**) of the drive motor, while position sensor **36** (see FIG. **1**) generates a signal which indicates the actual angular position **37** of the spindle **14**. Based on the desired final position **42** and the actual position **37**, motion controller **28** generates a motion command or speed signal **54** which is communicated to power amplifier circuit **30** and then to drive motor **32**. Thus, a control loop **40** is formed which continuously generates feedback regarding the actual speed **35** and the actual position **37** of rotating spindle **14**, which matches the actual speed and position of the first workpiece **18** held by chuck assembly **16**. Ideally, actual speed **35** closely approximates desired speed **53** (see FIG. **7**), while actual position **37** closely approximates the desired position **39**. The desired position **39**, which is generated by host computer **26** as explained below, represents the desired angular position of spindle **14** relative to its axis of rotation at any particular point in time during the weld cycle. Any differences between actual speed and/or position and desired speed and/or position are corrected by control loop **40** as discussed in greater detail below.

Referring now to FIG. **4**, amplifier circuit **30** includes summation node or junction **58** which sums the difference between the speed signal **54** and the actual speed **35**. Junction **58** generates a difference signal **59**, which is communicated to velocity amplifier **60**, which in turn generates a current command signal **62**. Current command signal **62** is communicated to summation node or junction **64**, which sums the difference between current command signal **62** and current feedback signal **66** from motor **32**. Junction **64** generates a difference signal **65**, which is communicated to amplifier **68**, which is connected to drive motor **32**.

FIG. **3** shows a flow chart of the weld cycle, while FIGS. **6** and **7** illustrate input register **38** and output register **70**, respectively. The appendix which forms a part of this description is a source code for a specific weld operation which is appropriately down loaded from computer **26** into motion controller **28** after the various weld and material parameters for the operation have been generated by the host computer. Upon commencement or start **82** of the weld cycle, computer **26** performs a series of pre-weld calculations **93** which are reflected by the output numbers in register **70**. The values for each of the output variables depend on a number of variables programmed into input register **38**. The input variables include the type of material **73** to be welded, the weight **75** of the rotating workpiece, and the geometric or size properties **77** of the workpieces to be welded together. Input register **38** also includes the desired final angular orientation between the workpieces relative to their common axis (the desired final position **42** of rotatable workpiece **18** relative to non-rotatable workpiece **22**), the lengths **76**, **78** of the first and second workpieces, respectively, and the desired length **80** for the finished product. Computer **26** obtains values for a material constant (mC) **6** and a geometry constant (gC) **8** from a pre-programmed Lookup Table as is common industry practice. Based on the values programmed into input register **38** for variables **73**, **75** and **77**, as well as the values obtained for constants **6**, **8**, the computer **26** then calculates and outputs the rotational moment of inertia **72** (see FIG. **7**). Computer **26** also calculates and outputs the target upset distance **74**, which is a linear measurement of the amount of material lost during the weld process, by adding the length **76** of workpiece **18** and the length **78** of workpiece **22**, and subtracting the desired length **80** of the final welded product. The values for lengths **76**, **78** and **80** are input into the computer **26** by the operator via input register **38**. Computer **26** also outputs the required pre-heat force level **79**, the required heat force level **81**, and the required forge force level **83**, which tells actuator **25** how hard to press the first workpiece and the second workpiece together during different phases of the weld cycle, all of which are calculated using conventional engineering principles. Computer **26** also calculates the required pre-heat time **61** (T1 to Ta), which is the length of time required to complete the pre-heat process, and also calculates the pre-heat distance **63**, which represents the distance traveled by the second workpiece **22** as it travels towards the first workpiece **18** along slide or track **24**. Similarly, computer **26** calculates the required heat time **65** (Ta to T2) and heat distance **67**, the required forge time **69** (T2 to T3) and required forge distance **71**, all of which is calculated using conventional engineering principles based on the material variables input by the operator. The sum of the pre-heat distance **63**, the heat distance **67** and the forge distance **71** equals the total upset distance **74**. Finally, based on the desired rotational speed **53** of the spindle during the weld phase, the computer calculates the number of pre-heat rotations **48** required in order to pre-heat the material at the required pre-heat force level **79**, the number of heating rotations **49** required to heat the material at the interface to a plastic state at the calculated heat force level **81**, as well as the number of forge rotations **50** required for the spindle to stop at the desired angular position **42** at the calculated forge force level **83**.

When the operator initiates the start command **82**, the computer **26** performs the pre-weld calculations **93** and creates the output register **70**, which contains values for each of the variables **39**, **44**, **46**, **48**, **49**, **50**, **53**, **61**, **63**, **65**, **67**, **69**, **71**, **72**, **74**, **79**, **81** and **83** as shown in FIG. **7**. Computer **26** generates the spindle profile curve **120** shown in FIG. **5**, and also sets the start position of slide **24** so that the total travel of slide **24** will match the desired upset distance **74**. Before the spindle rotation begins, a subroutine **89** causes motion controller **28** to orient the spindle **14** (the actual spindle position **37**) at a setpoint or "home" mark **87**. Next, a status subroutine **89A** communicates the presence of any spindle positional errors to the host computer **26** before motion controller **28** begins spindle rotation and initiates a correction of such errors through motion controller **28**. Upon completion of subroutine **89** with an indication of no errors,

subroutine **89**A communicates a go command to motion controller **28**, which in turn communicates a speed signal **54** to drive motor **32** commencing the rotation of spindle **14**.

As shown in FIG. **5**, the first phase of the weld cycle is the acceleration phase **90**, during which the spindle is accelerated to a desired rotational speed **53**. During acceleration phase **90**, subroutine **92** (see FIG. **3**) via control loop **40** constantly compares the actual spindle acceleration rotations **46**A, in increments of 1/1000th of a revolution, to the desired spindle acceleration rotations **46** as dictated by the spindle profile **120** for that particular moment during the acceleration phase **90**. Motion controller **28** makes the necessary speed adjustments via speed signal **54** as required, and the comparison by subroutine **92** continues until the acceleration phase **90** is complete. Subroutine **92** typically triggers the completion of the acceleration phase by monitoring the total spindle rotations for that phase, but may also be programmed to trigger the end of the first phase **90** based on elapsed time, Next, status subroutine **92**A commences which communicates the presence of any positional errors to the host computer **26** before commencement of the next stage. If any positional errors have been detected, such as the incorrect number of rotations during the acceleration phase or the improper angular position of the spindle **14** at the end of the phase, subroutine **92**A communicates the error(s) to computer **26**, which can immediately recalculate the remaining portions of spindle profile **120** for the subsequent phases in order to obtain the correct final angular position.

Upon completion of subroutine **92**A, a signal is sent to computer **26** which indicates that the second phase **96** is about to commence. Phase **96**, which commences at a time indicated by time T**1** in FIG. **5**, includes both a pre-heat phase **96**A and a heating phase **96**B. Phase **96**B terminates when the material at interface **19** has reached a plastic state, which should coincide with the completion of the desired pre-heat rotations **48** and the desired heating rotations **49**, and which signals the end of phase **96**. At the beginning of phase **96**, spindle **14** is rotating at the desired rotation or weld speed **53**, and motion controller **28** via control loop **40** maintains the rotation of spindle **14** at this desired speed. During the pre-heat stage **96**A, computer **26** sends a force command **85** to actuator **25**, which brings the workpiece **22** into contact with workpiece **18** at the pre-heat pressure force level **79**, followed by stage **96**B which through actuator **25** causes workpiece **22** to be continuously forced against workpiece **18** at a specific heat pressure force level **81**. The friction between workpiece **18** and workpiece **22** immediately begins to heat the interface **19** between the workpieces at the commencement of stage **96**A, and the heating continues through stage **96**B. During phase **96**, subroutine **98** via control loop **40** constantly compares the actual pre-heat rotations **48**A, in increments of 1/1000th of a revolution, to the desired pre-heat rotations **48**, plus the desired number heating rotations **49** to the actual heating rotations **49**A as dictated by the spindle profile **120** for that particular moment during phase **96**. Meanwhile, motion controller **28** makes any necessary speed adjustments via speed signal **54**. When subroutine **98** detects that the total heating rotations **49** have been completed with the material at the workpiece interface **19** reaching a plastic state, subroutine **98** indicates the completion of phase **96** by sending a signal to computer **26**. Next, status subroutine **98**A commences the presence of any errors in the position of spindle **14** to the host computer **26**. Upon completion of subroutine **98**A with an indication of no errors, subroutine **98**A communicates a command to computer **26** to commence the next phase.

Phase **96** is followed by a forge phase **100** which commences at time T**2**, and which terminates when the desired forge rotations **50** have been completed and the spindle rotation has stopped, which occurs at time T**3**. During forge phase **100**, spindle **14** decelerates in accordance with profile curve **120**. Forge phase **100** is in turn followed by a dwell phase **102** in which the two workpieces are maintained under pressure as the material at workpiece interface **19** cools, with phase **102** terminating at time T**4**. At the initiation of the forge phase **100**, motion controller **28** begins decelerating the spindle **14**, and subroutine **101** via control loop **40** constantly compares the desired forge rotations **50**, in increments of 1/1000th of a revolution, to the actual forge rotations **51** as dictated by the spindle profile **120** for that particular moment during phase **100**, and motion controller **28** makes the necessary speed adjustments via speed signal **54**. The comparison by subroutine **101** continues until the forge phase **100** is complete at time T**3**, at which point the spindle **14** has stopped at the desired final position **42**. Also during the forge phase **100**, as the spindle **14** begins to slow down, computer **26** sends a signal to actuator **25**, which causes an increase in pressure between first workpiece **18** and second workpiece **22** up to the forge force level **83**.

When spindle **14** stops, computer **26** measures the actual travel of actuator **25** and compares the actual upset length **104** to the desired upset length **74** and determines if the actual upset **104** is within bounds. Subroutine **110** monitors the time under forge pressure, and sends a signal to computer **26** when the dwell time is complete, which occurs at time T**4**. At time T**4**, the forge pressure is released and the weld cycle is complete. Finally, motion controller **28** reports any final positional errors to computer **26**, which can be communicated to the operator.

The invention is not to be limited to the following claims but it may be modified within the scope of the claims.

APPENDIX

```
rem *** Inertia Friction Welding Inc
rem *** Copyright 1996
rem *** All rights reserved
rem
rem
rem *** Inertia Friction Welding Inc
rem *** Copyright 1996
rem *** All rights reserved
rem
rem *** #MAIN
rem This is the main program task
#MAIN
JS #INIT
XQ #IDLE,1
#MAIN1
JS #CYCLE,@IN[1]=0;
JS #HOME,HPB=1;
JS #WELD1,RPB=1;
JP #MAIN1
EN
rem End #MAIN********************
rem *** Inertia Friction Welding Inc
rem *** Copyright 1996
rem *** All rights reserved
rem
rem *** #HOME
rem Home function
#HOME
HX 1;
HPB=0;
MG "HOME"
XYHomed=0;
HomeIP=1;
RevLS=0;ForLS=0;
ER HomeFE;
AC HomeAcc;
DC HomeDec;
```

APPENDIX-continued

```
KP HomeP;
KI HomeI;
KD HomeD;
IL 2;VT 1;
#HOMEX
MG "Homing . . . ";
StatMsg="HOMEX:"
rem Make sure of home switch
MG "Get off 'home switch . . . ";
JG FIVel;BGX;
#WFX2;JP #WFX2,@IN[2]=0;
WT 500
STX;AMX;JP #HOMEX,@IN[2]=0;
MG "Off Home switch . . . ";
rem Find home LS
MG "Looking for home switch . . . ";
#WFX1;
PR -5;BG;AMX;
JP #WFX1,@IN[2]=1;XPos=_TPX;
MG "Home switch found . . . ";
rem
rem Go back to home position
SP FIVel;
PA XPos;BG;AM;DP0;
MG "Slides Homed . . . "
#HOME1
XYHomed=1;
XQ #IDLE,1
EN
rem End #HOME*********************
rem *** Inertia Friction Welding Inc
rem *** Copyright 1996
rem *** All rights reserved
rem
rem *** #POSERR
rem Position following error
#POSERR
ZS;
JS #HALT;
MG "FOLLOWING ERROR"
StatMsg="FOLERR"
ZS;Jp #MAIN;
RE
rem End #POSERR *******************
rem *** Inertia Friction Welding Inc
rem *** Copyright 1996
rem *** All rights reserved
rem
rem *** #HALT
rem Brings motion to a stop
#HALT
StatMsg="HALT"
ER*=10000;II 0;AB 1;WT 1000;
SH;CS;HX 1;MO;
OP255;
rem JS #CLEARIO;
MG "Servo program halted . . . "
EN
rem end #HALT ********************
rem *** Inertia Friction Welding Inc
rem *** Copyright 1996
rem *** All rights reserved
rem
#IDLE
IdleTM=TIME
#IDLE1
JP #IDLE1,TIME-IdleTM<1000;
ITime=ITime+1;
MG "Servo Ready . . . ",ITime{F6}
JP #IDLE;
EN
rem End #IDLE *********************
rem *** Inertia Friction Welding Inc
rem *** Copyright 1996
rem *** All rights reserved
rem
#INIT
SB 1;SB 2;SB 3;SB 4;
SB 5;SB 6;SB 7;SB 8;
```

APPENDIX-continued

```
ER*=1000;
OE*=1;
TL 1;
GN 1;
AC 500;
DC 500;
KP .2;
KI .05;
KD 0;
HPB=0;
RPB=0;
XYHomed=0;
IdleTM=0;
ITime=0;
JS #INITGL
JS #INITWL
EN;
rem End #INIT **************
rem *** Inertia Friction Welding Inc
rem *** Copyright 1996
rem *** All rights reserved
rem
#WELD1
HX 1
RPB=0;
MG "Weld Cycle Started"
ER*=WeldFE;
OE*=1;
rem
TL WeldTL;
GN WeldGN;
SP WeldSP;
AC WeldAC;
DC WeldDC;
KP WeldKP;
KI WeldKI;
KD WeldKD;
Dist=PPR*WeldRev;
Dist2=Dist-(PPR*TrigRev);
PR Dist;
TW 500;
BGX;
MG "Scrub . . . "
rem Scrub start
AT 0;
AT ScrubTM;
rem Burn start
CB1;
MG "Burn . . . "
AD Dist2;
rem WT500
rem Forge Start
CB 2;
SB 1;
MG "Forge . . . "
AMX;
KP WeldKP2;
WT ForgeTM;
SB 2
MG "Weld complete"
WT 10000
KP WeldKP;
EN;
rem End #WELD1 *******************
rem
#CYCLE
JS #HOME,XYHomed=0;
JS #WELD1;
XQ #IDLE,1
EN
rem End #CYCLE *******************
#MCTIME
MG "Position timeout . . . "
RE
rem End WELD/CYCLE MODULE ********
rem
#INITGL
rem
rem GLOBAL VARIABLES
```

APPENDIX-continued

```
rem
rem
rem PULSES PER INCH
PPI=1000.000000
rem PULSES PER REV
PPR=7941.22449
rem Timer Ticks Per Second
TPS=1000
rem    Input Volts Per Unit
IVltPRPM=2.000000
IVltPPSI=3.000000
rem    Output Volts Per Unit
OVltPRPM=2.000000
OVltPPSI=3.000000
rem Sample Rate
SampleRt=100
rem Number of IO
rem Homing following error counts
HomeFE=2000;
HomeVel=1000;
HomeAcc=500;
HomeDec=500;
HomeP=.8;
HomeI=.02;
HomeD=0;
GHomeVel=1000;
FTVel=1000;
rem Software limits
XFLimit=11.000
YFLimit=11.000
XBLimir=-0.100
YBLimit=-0.100
InvertIO=1
rem Max Move Values
MaxXMVel=10
MaxXMAcc=40
MaxXMDec=40
En
rem
rem Weld start values
#INITWL
rem *** Inertia Friction Welding Inc
rem *** Copyright 1996
rem *** All rights reserved
rem
rem Weld specific params
WeldRPM=1750
ScrubTM=2000;
ForgeTM=4000;
WeldRevS=10
Degrees=0
TrigRev=0.5
rem
rem PID params
WeldAcc=100
WeldDec=100
WeldKP=0.5
WeldKP2=1
WeldKI=0.02
WeldKD=50
WeldFErr=1.5
WeldTL=9.9988
WeldGD=20
rem
rem Calculated parameters
WeldRev=(Degrees/360)+WeldRevS;
WeldSP=(WeldRPM*PPR)/60;
WeldAC=(WeldAcc*PPR)/60;
WeldDC=(WeldDec*PPR)/60;
WeldFE=WeldFErr*PPR;
rem
rem End weld.txt *************
EN
rem End #INITLW *****************
```

What is claimed:

1. A method of friction welding first and second parts together having a specific axial orientation relative to each other in which said first part is mounted to a spindle for axial rotation said second part is mounted to a non-rotatable holder moveable toward said spindle along the axis of rotation of said first part, comprising the steps:

a. causing said spindle and mounted first part to be rotated at a desirable speed while determining the angular axial orientation of said first part relative to said second part at any specific time,

b. moving said holder toward said spindle to bring said second part into frictional contact with said first part at a selected one said specific time to cause heating of said first and second parts and the melting of the respective contacting surfaces thereof,

c. then decreasing the speed of rotation of said spindle and mounted first part and simultaneously moving said holder towards said spindle to forcibly urge said first and second parts together at said contacting surfaces, and

d. stopping rotation of said spindle and mounted first part at a specific determined angular axial orientation of said first part relative to said second part while still forcibly urging said first and second parts together to allow cooling and fused solidification of said contacting surfaces.

2. The method of claim **1** wherein step b includes bringing said first and second parts into frictional contact at a first pressure force with the combined axial length of said first and second parts being reduced a specific distance followed by a second pressure force greater than said first pressure force with the combined axial length of said first and second parts being further reduced a second specific distance while maintaining said first desirable speed.

3. The method of claim **2** wherein step c also includes applying a third pressure force greater than said second pressure force to said first and second parts with the combined axial length of said first and second parts being reduced a third specific distance.

4. The method of claim **3** including monitoring the angular axial orientation of said first part relative to said second part during steps a, b, c, and d.

5. The method of claim **4** wherein step d includes applying a forge force to said first and second parts for a specific dwell time.

6. The method of claim **1** including determining responsive to one or more material characteristics of said first and second parts said desirable speed, said one specific time, and amount of force utilized to so force said first and second parts together during rotation of said spindle and mounted first part.

7. The method of claim **1** including monitoring said angular axial orientation of said second part of said first and second parts relative to each other and adjusting the rotational speed of said spindle to arrive at said specific determined angular axial orientation of said first part relative to said second part.

8. The method of claim **1** including adjusting the rotational speed of said spindle during steps b to effect said melting of the contacting surfaces of said first and second parts.

9. A method of using a friction welding machine to weld a pair of workpieces together at a desired final angular orientation relative to each other, the friction welding machine including a rotatable spindle and a non-rotatable tailstock, the method comprising the steps of:

calculating a set of weld parameters used to control the friction welding machine, the set of welding parameters including a desired spindle speed and a desired spindle position;

mounting a first one of the pair of workpieces to the rotatable spindle and a second one of the pair of workpieces to the non-rotatable tailstock;

rotating the rotatable spindle;

monitoring at least one of an actual spindle speed and an actual spindle position to produce a measurement;

comparing the measurement with at least one of the desired spindle speed and desired spindle position;

adjusting at least one of the actual spindle speed or the actual spindle position so that the actual spindle position is substantially similar to the desired spindle position; and

bringing the pair of workpieces into frictional contact with each other to generate a weld such that the workpieces are welded together in the desired final angular orientation relative to each other.

10. The method according to claim 9, wherein the method includes the step of:

repeating the monitoring, comparing, and adjusting steps until the actual spindle speed equals the desired spindle speed.

11. The method according to claim 9, wherein the welding machine includes a computing device, and wherein the calculating step comprises:

entering a set of input parameters into the computing device, the input parameters including the desired final angular orientation between the pair of workpieces and the physical characteristics of the pair of workpieces.

12. The method according to claim 9, wherein the calculating step comprises generating a spindle profile curve from the calculated set of weld parameters.

13. The method according to claim 12, wherein the spindle profile curve includes a plurality of phases, the spindle profile curve further being indicative of at least one of the desired spindle speed or the desired spindle position at one of a plurality of time intervals within the phases.

14. The method according to claim 13, wherein the rotating step comprises:

positioning the rotatable spindle in a desired initial angular position; and

rotating the rotatable spindle so that the actual spindle speed for a current one of the phases is substantially equal to the desired spindle speed for the current phase.

15. The method according to claim 13, wherein the rotating step comprises:

wherein each of the phases, adjusting the actual spindle speed of the rotatable spindle so that the desired spindle speed for each of the phases is substantially equal the desired spindle speed of each of the phases.

16. The method according to claim 13, wherein the rotating step during a last one of the phases includes the step of slowing the rotation of the rotatable spindle until the actual spindle speed equals zero.

17. The method according to claim 9, wherein the comparing step comprises:

monitoring either the actual spindle position of the rotatable spindle or the actual spindle speed periodically.

18. The method according to claim 9, wherein the friction welding machine includes a controller, and including the steps of:

calculating a difference between the actual spindle position and the desired spindle position;

communicating the difference to the controller; and

adjusting the actual spindle position to minimize the difference.

19. The method according to claim 9, wherein the adjusting step comprises:

utilizing the comparison between the actual spindle position and the desired spindle position at a particular time point to determine the required adjustment to the actual spindle speed.

20. The method according to claim 9, wherein the bringing into frictional contact step comprises:

moving the non-rotatable tailstock towards the rotatable spindle according to the set of weld parameters.

21. The method according to claim 9, wherein the bringing into frictional contact step comprises:

contacting the first one of the pair of workpieces to a second one of the pair of workpieces; and

generating heat at a contact surface formed between the pair of workpieces.

22. An apparatus for controlling a friction welding machine, comprising:

a motion controller;

a position sensor; and

a computing device for accepting the entry of input parameters, the computing device operatively coupled to the motion controller and the position sensor; wherein

the computing device being programmed to (i) calculate a set of weld parameters from input parameters, wherein the weld parameters include a desired spindle speed and desired spindle position, (ii) cause the motion controller to produce a command signal indicative of a desired spindle speed calculated from a set of input parameters, (iii) receive a status signal from the position sensor indicative of an actual spindle position at a specific time point, (iv) compare the actual spindle position to the desired spindle position calculated from the set of input parameters at the specific time point, and (v) cause the motion controller to deliver a difference signal to make any necessary corrections to the rotational speed.

23. The apparatus according to claim 22, wherein the friction welding machine is comprised of a rotatable spindle and a drive motor, and wherein the motion controller generates a motion command and communicates the motion command signal to the drive motor that drives the rotatable spindle so that the rotatable spindle rotates.

24. The apparatus according to claim 22, wherein the position sensor includes a tachometer for measuring the speed of the rotatable spindle.

25. The apparatus according to claim 22, wherein the computing device is operatively coupled to the motion controller and position sensor so that the computing device can compare the status signal from the position sensor to the calculated weld parameters and deliver a motion command signal to the drive motor to make a correction to the actual spindle speed or actual spindle position.

* * * * *

UNITED STATES PATENT AND TRADEMARK OFFICE

CERTIFICATE OF CORRECTION

PATENT NO. : RE 39,019 E
APPLICATION NO. : 09/759823
DATED : March 21, 2006
INVENTOR(S) : Lowell R. Tully

It is certified that error appears in the above-identified patent and that said Letters Patent is hereby corrected as shown below:

Col. 1, line 7; please insert;
--Notice: More than one reissue application has been filed for the reissue of patent 5,858,142. The reissue applications are the present reissue application, 09/759,823, now U.S. Patent No. RE39,019, and reissue application 10/988,448, which is a continuation of reissue application 09/759,823.--

Signed and Sealed this

Fourth Day of December, 2007

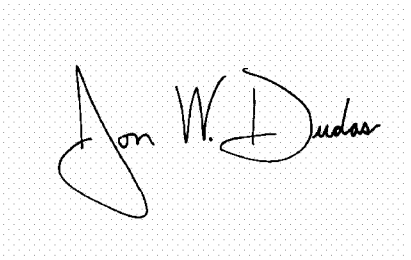

JON W. DUDAS
Director of the United States Patent and Trademark Office