J. HORN.

AUTOMATIC SHEET FEEDING AND DELIVERY MECHANISM FOR PLATEN PRESSES.

APPLICATION FILED AUG. 16, 1913.

1,154,312.

Patented Sept. 21, 1915.

3 SHEETS—SHEET 1.

Fig. 1.

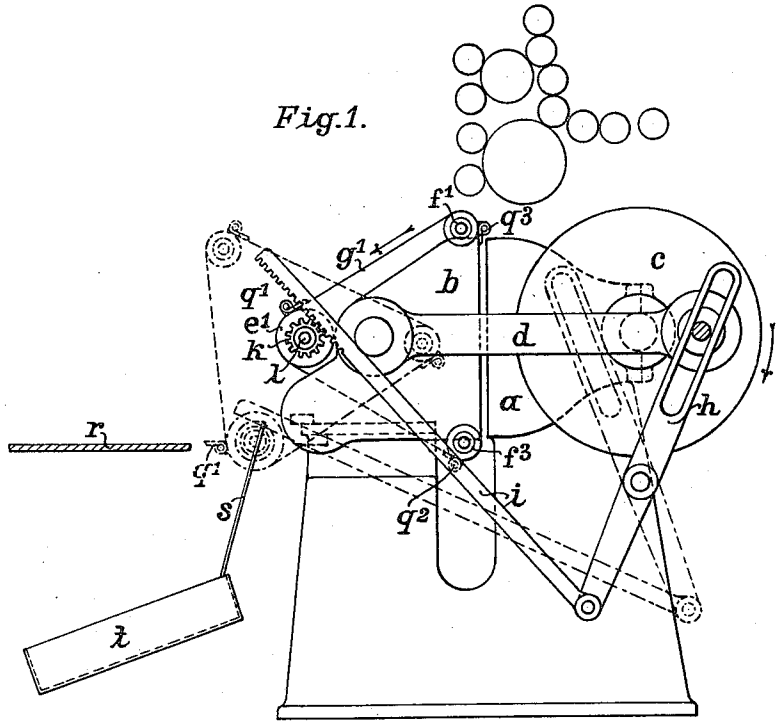

Fig. 2.

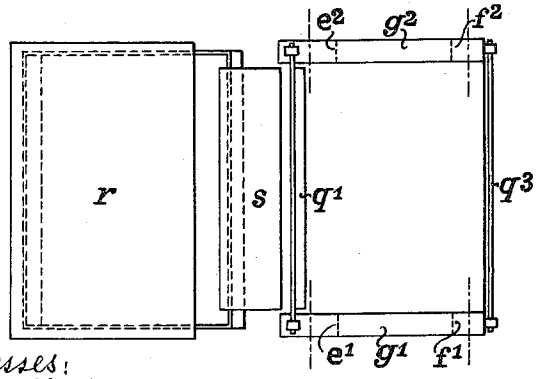

Witnesses:
Marie D. Wohlers
J. B. Le Blanc.

Inventor:
Josef Horn,
By Serrell & Son
his Attorneys.

COLUMBIA PLANOGRAPH CO., WASHINGTON, D. C.

J. HORN.

AUTOMATIC SHEET FEEDING AND DELIVERY MECHANISM FOR PLATEN PRESSES.

APPLICATION FILED AUG. 16, 1913.

1,154,312.

Patented Sept. 21, 1915.

3 SHEETS—SHEET 2.

Fig. 3.

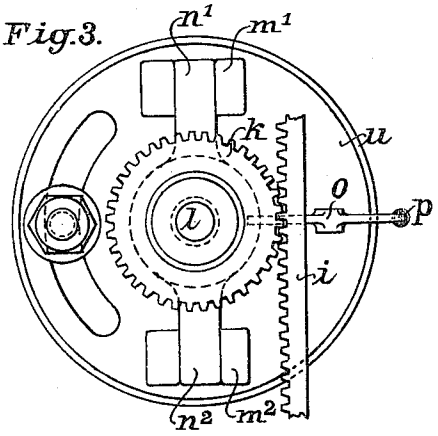

Fig. 4.

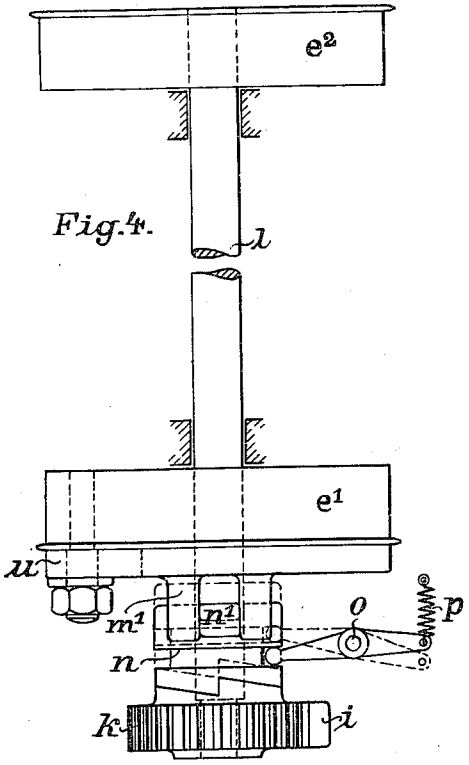

Witnesses:
Marie D. Wohlers.
J. B. Le Blanc.

Inventor:
Josef Horn,
By Serrell & Son
his Attorneys

COLUMBIA PLANOGRAPH CO., WASHINGTON, D. C.

J. HORN.

AUTOMATIC SHEET FEEDING AND DELIVERY MECHANISM FOR PLATEN PRESSES.

APPLICATION FILED AUG. 16, 1913.

1,154,312.

Patented Sept. 21, 1915.

3 SHEETS—SHEET 3.

Fig. 5.

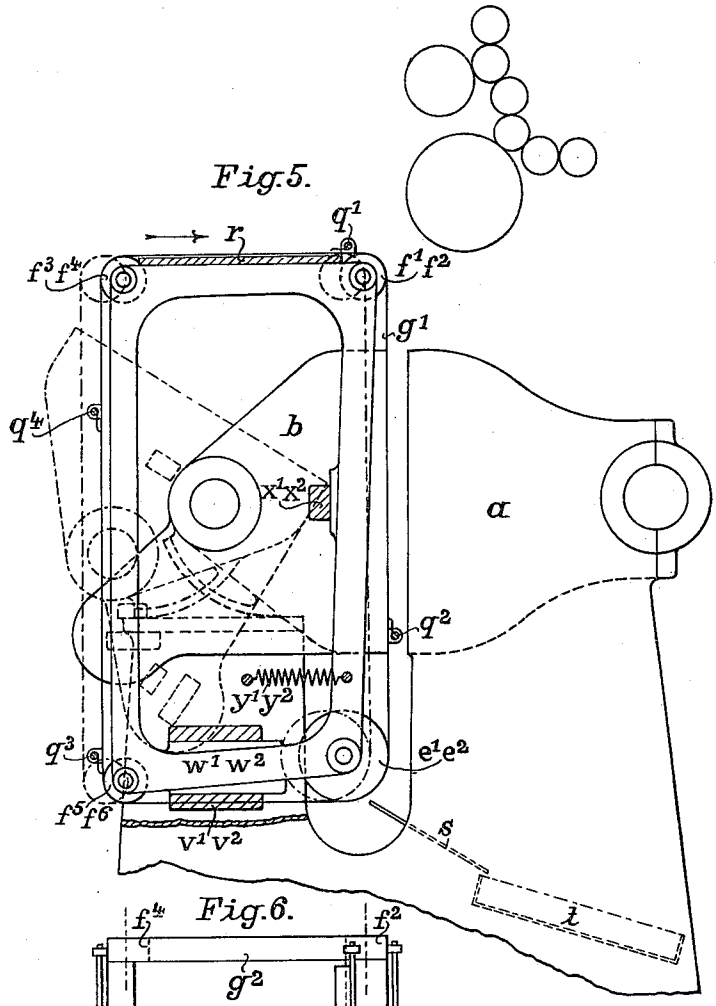

Fig. 6.

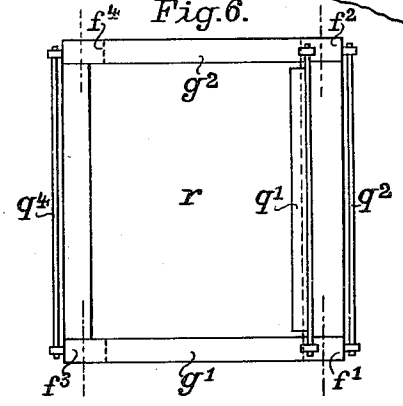

Witnesses:
Marie S. Wohlers.
J. B. Le Blanc.

Inventor,
Josef Horn,
By Serrell & Son
his Attorneys.

COLUMBIA PLANOGRAPH CO., WASHINGTON, D. C.

UNITED STATES PATENT OFFICE.

JOSEF HORN, OF KÖTZSCHENBRODA, NEAR DRESDEN, GERMANY, ASSIGNOR TO THE FIRM OF MASCHINENFABRIK ROCKSTROH & SCHNEIDER NACHF. AKTIENGESELLSCHAFT, OF HEIDENAU, NEAR DRESDEN, SAXONY, GERMANY.

AUTOMATIC SHEET FEEDING AND DELIVERY MECHANISM FOR PLATEN-PRESSES.

1,154,312. Specification of Letters Patent. Patented Sept. 21, 1915.

Application filed August 16, 1913. Serial No. 785,020.

To all whom it may concern:

Be it known that I, JOSEF HORN, manufacturer, a subject of the King of Saxony, German Empire, and resident of Meissnerstrasse 13, Kötzschenbroda, near Dresden, Kingdom of Saxony, German Empire, have invented a new and useful Improvement in Automatic Sheet Feeding and Delivery Mechanism for Platen-Presses, of which the following is a specification.

The present invention has for its object a sheet feeding and delivery mechanism for platen-presses in which the sheet is introduced into the press by endless and positively guided conveying-devices, as for instance chains, bands, ropes or the like. Mechanisms of this kind are known already for platen-presses working together with a stationary and obliquely arranged platen and even for platen-presses provided with a horizontally arranged platen. In these presses, however, smaller editions or printings for which it will be necessary to lay a sheet on the printing surface of the platen directly by hand, could not be successfully produced for the reason that the sheet feeding mechanism would form a hindrance for the operation or a great deal of time would be lost by the removal of said mechanism.

The present invention has for its object to obviate the drawbacks mentioned before. For this purpose the endless and positively guided conveying-means are arranged in a platen-press provided with an oscillating or rocking platen and combined with the said platen in such a manner that the conveying means will in no way form a hindrance to the work of the printer, though the said means are compelled to also follow the long way, to be passed by the platen in the platen-presses of the kind mentioned. It will result from this fact that the new mechanism makes it possible for the sheets to be printed to be fed automatically to the platen of a platen press provided with an oscillating or rocking platen or to be applied to the latter by hand. Besides this, the liability of injury to the printer's hand is materially prevented by providing the oscillating or rocking platens with a sheet feed mechanism consisting of endless conveying means. The automatic sheet feeding and delivery mechanism for platen-presses constructed according to the present invention and provided with an oscillating or rocking platen may also, when constructed accordingly, easily be applied to existent platen-presses without necessitating the substitution of the platen by another one or the modification of the same. For this purpose the endless and positively guided conveying means, although they are guided also around the printing surface of the platen, are not directly arranged on the platen but on a separated frame. This frame in or between which the platen is moved can totally or partially partake of the movements of the platen, however its movement will not be an oscillating but a rectilinear one. Therefor it will only be necessary to adapt the frames carrying the conveying means and its driving mechanism to the ordinary and existing platen-presses for insuring a higher efficiency of the machine in question.

The nature of this invention and the manner in which the same is or may be carried into effect can best be explained and understood by reference to the accompanying drawings in which—

Figure 1 is a side-elevation and Fig. 2 is a plan of the automatic sheet feeding and delivering mechanism. Figs. 3 and 4 show in side elevation and plan (on a larger scale) the driving means forming part of the mechanism. Fig. 5 is a longitudinal elevation, partly in section, showing a modified form of the mechanism as illustrated in Fig. 1, and Fig. 6 is a plan illustrating the sheet feeding and delivering mechanism.

a is the printing table of a platen-press. The platen b is oscillated or rocked and, in consequence, opened and closed in a well known manner by means of the connecting-rods d actuated by the crank-disks c. The driving disks e^1 e^2 are situated in the front part of the platen b and the rollers f^1, f^2, and f^3, f^4 are provided on the upper and lower edge of the platen. The conveying means g^1, g^2 are guided around the said rollers and in an upward direction in front of the platen b in such a manner that they cannot slide on them, but are positively driven in a known manner by two driving disks e^1, e^2, rotated by means of the crank-disk c, the two-armed lever h and the toothed bar i engaging the toothed wheel k shaped as a coupling. The wheel k and the disk e^1 are fastened on a common shaft l. The clutches m^1, m^2 pro-

ject from the hub u rigidly connected to the driving disk e^1 by a screw and are engaged by the pins n^1, n^2 of the coupling hub n laterally adjustable on the shaft l so that it may be engaged or disengaged by the lever o and the spring p. The coupling-hub n and the wheel k are provided with beveled teeth in such a manner that the coupling part will rotate the wheel k and the hub n in one direction only, when the pin of the crank-disk moves within the upper part of the latter. If, however, said pin moves within the lower part of the crank-disk, the hub n will be pushed sidewise by the beveled teeth, so that the hub will not be rotated and the conveying means such as heavy bands or the like are not moved along. Said means will, therefore, be at rest during this period and this is so provided that the said means will come to rest shortly before the closing of the press, that is prior to the printing period, and is maintained even during the backward oscillating movement of the platen up to its most open position. The conveying means g^1, g^2 are provided with the fingers q^1, q^2, q^3.

The mode of operation of the mechanism described is as follows: The sheet to be printed is placed on the table r of the press and taken by the finger q^4 when the platen is in its most open position. During the backward movement of the platen the conveying means begin to travel and convey the sheet taken and held by the finger q^1 down to the lower roller f^3. The sheet taken by the preceding finger q^2 has, during this period, been conveyed onto the printing surface of the platen for the purpose of receiving a print or impression. In the meantime, the sheet first printed, and situated in front of the sheet printed in the second place has been conveyed to the upper slanting surface of the platen b by the finger q^3. At this moment, the finger q^3 will open itself in such a manner that the sheet printed as the last but one, will slide down on a slanting surface s and fall onto the delivery table t. If hereafter the platen is again in its most open position, the finger q^3 being in the corresponding position will take another sheet and is laid in the meantime on the table whereupon the operation described will be repeated.

It is of value to state that the fingers are rigidly fastened to the conveying means. As, however, it is of importance that the sheet to be printed is permanently in the middle part of the printing surface during the entire printing operation, the conveying means together with the fingers arranged on them may be adjusted in both directions of their travel. For this purpose the disk-like hub u is provided with a curved slit or groove in which a screw-pin fastened to the driving disk e^1 is guided. If, for instance, sheets of smaller size are printed upon, the conveying means g^1, g^2 together with the fingers q are shifted by the rotating driving disks e^1, e^2 to the middle part of the printing surface, till the fingers are in a right position corresponding to the size of the sheet to be printed upon. Hereafter the nut of the pin fastened to the driving disk e^1 is screwed down, so that the latter together with the hub u will act as one combined part to be driven by the wheel k through the coupling-hub n.

The object of the present invention involves still another advantage consisting in that a very long time or period is at disposal for laying a sheet to be printed on the printing surface, in as much as the sheet may be marked during the entire operation of the printing-press for the reason that the sheet is always only taken by the finger at the very moment of the most open position of the platen and removed from the delivery-table r. Furthermore attention is directed to the fact that the sheets may be taken automatically from a superimposed pile and laid afterward upon the table r instead of being taken by hand.

In the form of construction illustrated in Fig. 5 and Fig. 6 a is the printing table and b the oscillating or rocking platen. Guide-bearings v^1, v^2 are provided on both sides of the printing table a in such a manner that the frames w^1, w^2 may be movably inserted in them. The rollers f^1, f^2, f^3, f^4, f^5 and f^6 and the driving-rolls e^1, e^2 are rotatably supported in said frames. The endless conveying means g^1, g^2 running in this form of construction in a downwardly direction and in front of the platen b are guided in a known and positive manner around the rollers mentioned and are driven in a known manner by the driving-rollers e^1, e^2. The fingers q^1, q^2, q^3, q^4 are fastened in any suitable manner to the conveying means g^1, g^2. The sheets to be printed upon are taken up or gripped by the fingers q^1 and guided between the platen and the printing-table. As the platen b in its movement approaches the printing table a, the frames w^1, w^2 are at the proper moment taken along by the projections or noses x^1, x^2 provided on the platen. When the projections rest on the frame, also the sheet fed or supplied into the press will be in contact with the printing surface of the platen b. After the impression or print is taken, the platen again returns to its open position and also the frame returns, by the action of the coiled-springs y^1, y^2 to its opened position at least so far that the distributing-cylinders may supply the color to the platen without difficulty. In the meantime again the conveying means g^1, g^2 begin to travel and the sheet printed slides down on the slanting surface s onto the

delivery-table *t*. Simultaneously a fresh sheet to be printed is introduced into the press by another finger. The marking of a sheet may naturally also be effected in the lower part of the frame. In this case, the sheets are not supplied to the platen-press in a downward, but in an upward direction and are, in this case, delivered in the upper part of the frame.

Instead of the conveying means moved around the platen and consisting of endless chains, bands, ropes or the like, endless broad conveying bands of steel or other metal, india rubber, or any other suitable material may be used. Said metallic conveying band may be moved around the full periphery of the platen and its width may be equal to or greater than the printing surface of the platen-press itself. If such a broad metallic conveying band is used the entire surface of the sheets to be printed is in contact with the conveying means during the printing operation and especially during the removing from the platen-press. Therefore, the sheets printed upon will safely be removed from the platen-press by adhesion or friction caused by the conveying bands even when, by any circumstances, the fingers do not sufficiently hold the sheet or open themselves in advance. Besides this, the employment of broad conveying bands has the advantage that they may automatically be conveyed from the platen-press if the sheets are fed on the platen by hand. By this means the printer has much more time at his disposal for laying on the sheets than if he is compelled to still deliver the sheet printed upon by hand.

Instead of conveying the broad metallic band around the entire periphery of the platen, the latter can be provided with a groove situated between the printing surface and the trunnion of the platen. In this case the endless conveying-band guided during its traveling movement in one direction along the printing surface is passed through the groove mentioned when traveling in its other direction. By this means the advantage is obtained that the endless conveying band need not be of such a length as it would have to be if guided around the entire periphery of the platen.

What I claim is:

1. In a platen printing press, the combination with a bed-plate and an oscillating or rocking platen of endless sheet conveying devices including gripper members, rollers on the sides of the said platen and over which the said endless sheet conveying devices travel and move with the platen, means for actuating the platen, and means for driving the said endless sheet conveying devices.

2. In a platen printing press, the combination with a bed-plate and an oscillating or rocking platen, of endless conveyer bands, grippers attached to the said endless conveyer bands in predetermined spaced positions, rollers on both sides of the said platen and over which the said endless conveyer bands travel and also move with the said platen, means for actuating the platen, and means for driving the said endless conveyer bands.

3. In a platen printing press, the combination with a bed-plate and an oscillating or rocking platen, of frames associated with the platen, rollers mounted on the said frames, endless conveyer bands adapted to travel over the said rollers, grippers secured on the said endless conveyer bands, means for actuating the platen, means for driving the said endless conveyer bands, and means whereby the frames during a predetermined portion of its stroke are moved by the said platen.

4. In a platen printing press, the combination with a bed-plate and an oscillating or rocking platen, of endless conveyers, grippers secured to the said endless conveyers, means for adjusting the position of the said grippers according to the size of the sheet to be printed, rollers and drive pulleys carried by the said platen and over which the said endless conveyers travel, and means for intermittently actuating the said drive pulleys to move the said endless conveyers and grippers to feed sheets to be printed to the press.

5. In an automatic feeding and delivery mechanism for platen-presses, the combination with an oscillating or rocking platen, of frames separately arranged from the platen mentioned, devices for permanently and positively conveying the sheet to be printed upon around the periphery of said frames, and means for combining the movement of the frames with that of the platen, substantially as and for the purpose specified.

In testimony, that I claim the foregoing as my invention, I have signed my name in presence of two witnesses, this 31st day of July, 1913.

JOSEF HORN.

Witnesses:
PAUL ARRAS,
CLARE SIMON.

Copies of this patent may be obtained for five cents each, by addressing the "Commissioner of Patents, Washington, D. C."