Sept. 13, 1966 P. J. ICENBICE, JR 3,273,153

PORTABLE FIELD ANTENNA, USABLE ABOVE DENSE FOLIAGE

Filed Sept. 16, 1963 3 Sheets-Sheet 1

Fig. 1

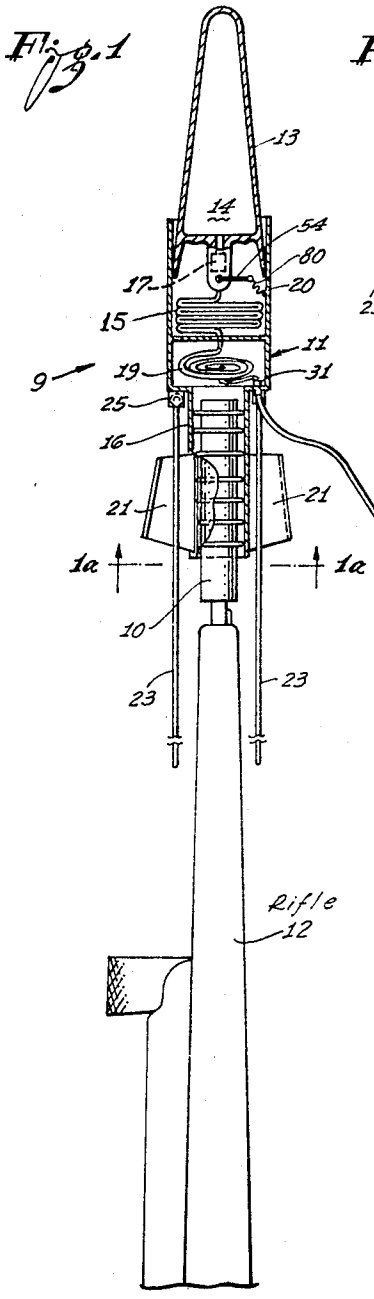

Fig. 1a

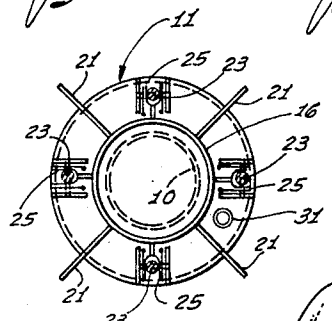

Fig. 1c

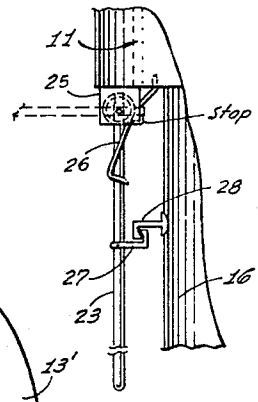

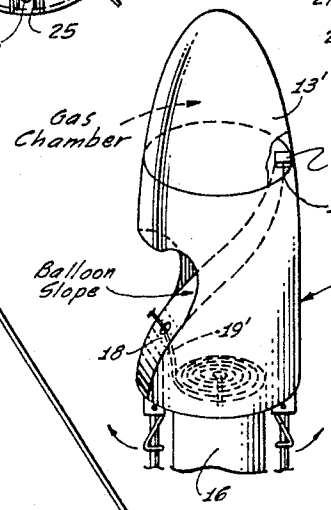

Fig. 1b

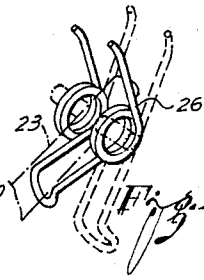

Fig. 1d

INVENTOR:
Phineas J. Icenbice, Jr.

By Stephen L. King

Attorney

Sept. 13, 1966 P. J. ICENBICE, JR 3,273,153

PORTABLE FIELD ANTENNA, USABLE ABOVE DENSE FOLIAGE

Filed Sept. 16, 1963 3 Sheets-Sheet 2

Fig. 2

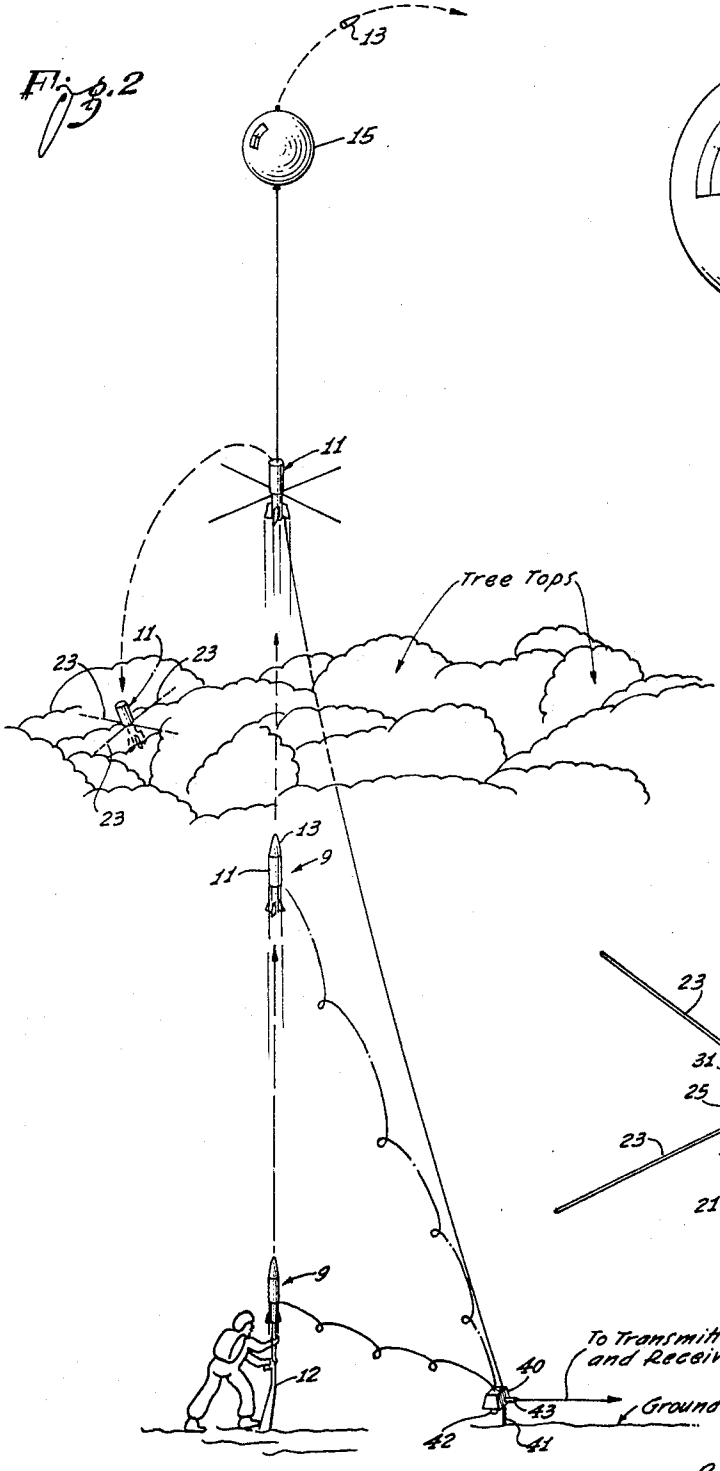

Fig. 3

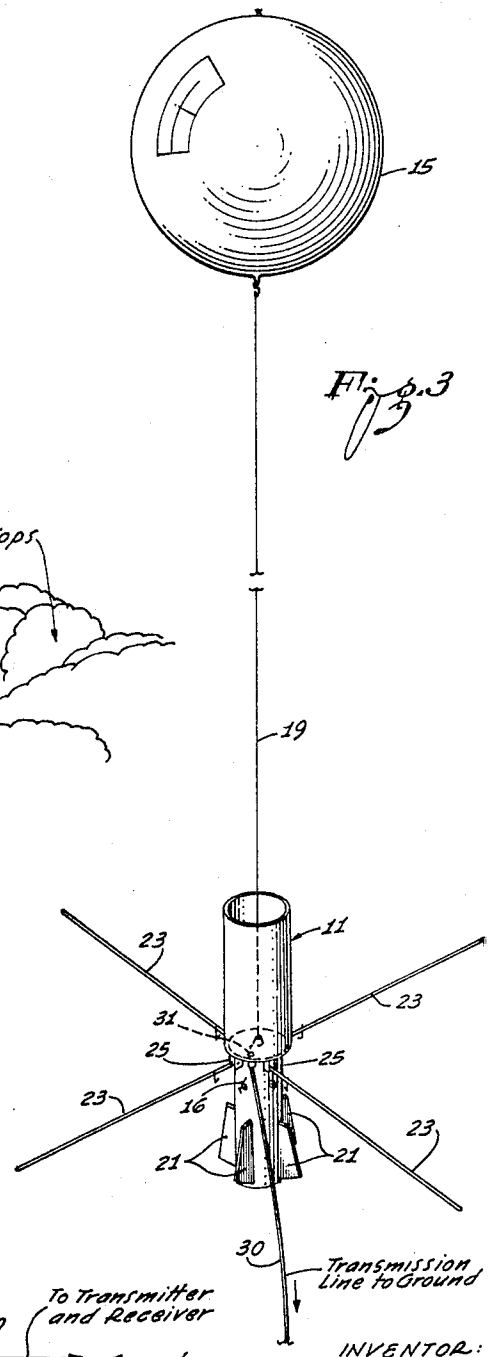

INVENTOR:
Phineas J. Icenbice, Jr.

By Stephen J. King
Attorney

Sept. 13, 1966 P. J. ICENBICE, JR 3,273,153

PORTABLE FIELD ANTENNA, USABLE ABOVE DENSE FOLIAGE

Filed Sept. 16, 1963 3 Sheets-Sheet 3

Fig. 4

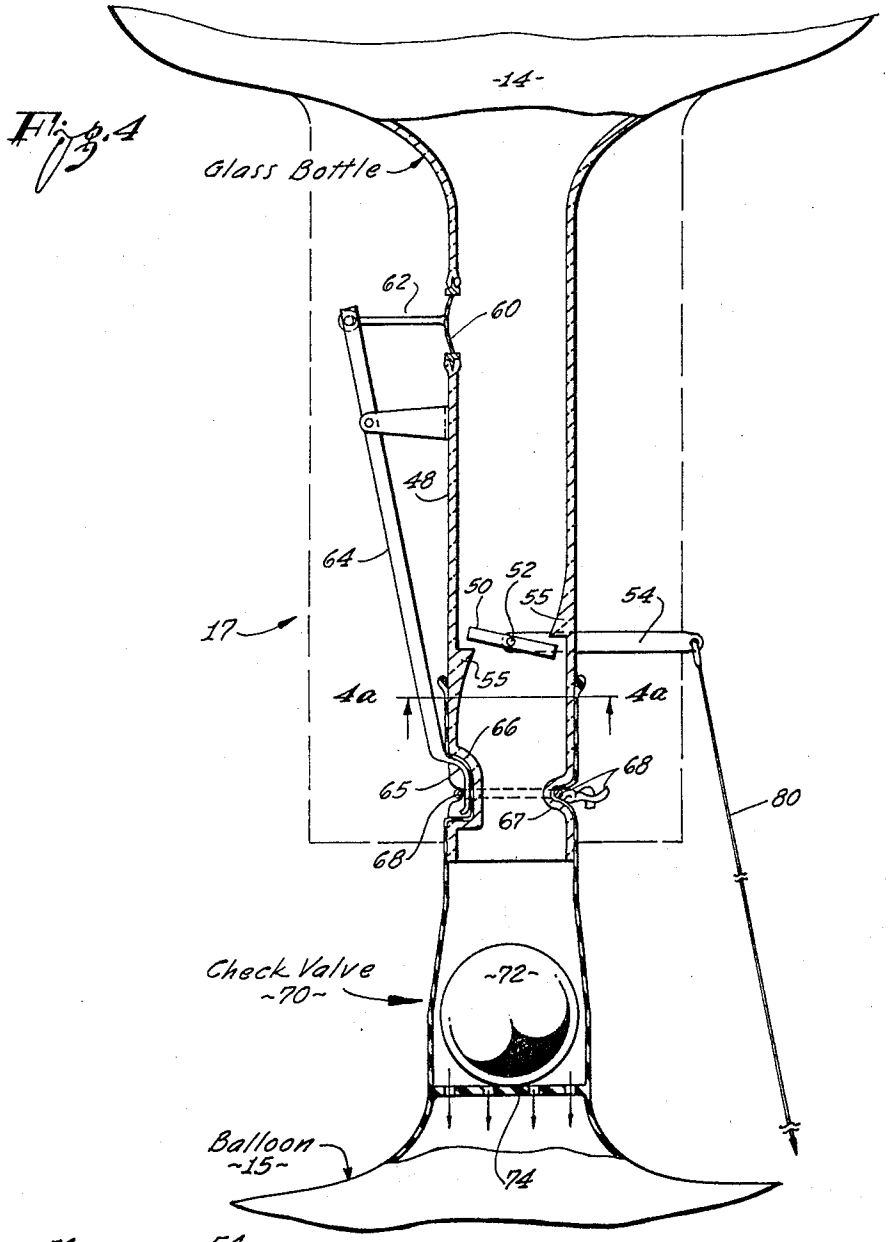

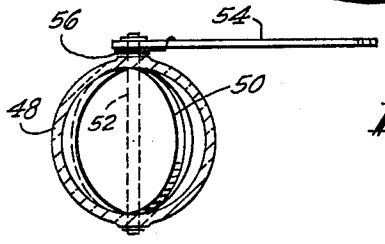

Fig. 4a

INVENTOR:
Phineas J. Icenbice, Jr.
By
Attorney

United States Patent Office 3,273,153 Patented Sept. 13, 1966

3,273,153

PORTABLE FIELD ANTENNA, USABLE ABOVE DENSE FOLIAGE

Phineas J. Icenbice, Jr., Los Angeles (Northridge), Calif., assignor to Litton Systems, Inc., Woodland Hills, California

Filed Sept. 16, 1963, Ser. No. 309,017
11 Claims. (Cl. 343—706)

The present invention relates to a portable field antenna and, more particulasly, to a light weight, quickly erected, radio transmission antenna for use in heavily wooded environments.

Establishing radio communication between two distant locations requires that, in addition to providing each location with a transmitter and receiver, each transmitter-receiver must be provided with an antenna. In regions where there are few trees, erecting such an antenna presents no problem. For example, in such regions a short antenna may be affixed directly to an output terminal of the transmitter and receiver; a tower may be erected for supporting a radio antenna; or an inflated balloon may be used to carry the antenna aloft. In tropical rain forests, dense jungle, or other heavily wooded areas, where the moist, compact overgrowth of tree foliage (jungle canopy) renders an antenna operating at ground level relatively ineffective by absorbing substantially all of the radiated field energy of the antenna, the known methods of erecting an antenna are not applicable to the raising of an antenna above the jungle canopy. Special problems are encountered because of the facts that the jungle canopy is generally higher than 75 feet and that there are seldom available in these canopies large openings through which the antenna could be projected. Moreover, in situations where emergency communication must be quickly established (by forest fire fighting or jungle-based military personnel, for example), valuable time is wasted by attempting to raise an antenna above the tree tops by any conventional method. Accordingly, the antenna requirements of persons deep in heavily wooded areas have dictated a need for a portable antenna system that can be erected above the jungle canopy in a few seconds.

The present invention provides a compact, light weight, easily transportable device for raising an antenna above the jungle canopy and keeping it there ready for radio transmission. More particularly, according to one embodiment of the present invention, the antenna package is made similar in shape to a rifle grenade and is launched as is the conventional rifle grenade commonly used in military applications. The antenna package, as launched, houses an antenna wire, one end of which is attached to a deflated balloon and the other end of which is connected to a suitable transmission line for connecting the antenna wire to the transmitter-receiver. The antenna package, equipped with a blunt nose cone for enabling it to withstand the shock of being plunged through a dense jungle canopy and side control fins for imparting aerodynamic stability to the package during its flight, breaks its way through the dense foliage and rises to a predetermined altitude above the jungle canopy. At this altitude the antenna package separates into two sections. The first section, housing a gas container and a valve mechanism, draws the deflated balloon from the second section and begins to inflate it. The balloon, in turn, draws the antenna wire from the second section and lifts the antenna wire into the air. When the balloon is fully inflated, the gas container and valve mechanism are detached from the balloon, allowing the balloon to fully extend the antenna, now ready for the reception and/or emission of radio signals. The second section of the antenna package settles down and lodges itself in the jungle canopy making an electrical as well as mechanical

contact with the moist foliage for enabling the antenna to operate as a type of ground plane antenna.

It is, therefore, an object of the present invention to improve communication between ground based personnel in a heavily wooded region with personnel in other remote locations.

A further object of the present invention is to erect an antenna above tree top level in a heavily wooded area.

A further object of the present invention is to provide a light weight, easily transportable antenna system that can be erected in a few seconds.

Still a further object of the present invention is to maintain an antenna above a jungle canopy once it has been projected to that location.

The novel features which are believed to be characteristic of the present invention, both as to its organization and method of operation, together with further objects and advantages thereof, will be better understood from the following description considered in connection with the accompanying drawing in which one embodiment of the present invention is illustrated by way of example. It is to be expressly understood, however, that the drawings are for the purpose of illustration and description only and are not intended as a definition of the limits of the invention.

In the drawings:

FIGURE 1 illustrates a cross-sectional view of the antenna projectile of the present invention positioned on a rifle grenade launching adapter;

FIGURE 1*a* illustrates a rear end view of the antenna projectile illustrated in FIGURE 1;

In FIGURE 1*b* is illustrated an alternate embodiment of the upper shell portion of the antenna projectile as shown in FIGURE 1;

In FIGURE 1*c* is illustrated one embodiment of locking mechanism that may be employed in the mechanization of the antenna projectile illustrated in FIGURE 1;

FIGURE 1*d* illustrates one type of biasing spring that may be employed in the locking mechanism illustrated in FIGURE 1*c*;

FIGURE 2 illustrates the sequence of operation for erecting an antenna above a jungle canopy by the use of the present invention;

FIGURE 3 illustrates the antenna package fully erected above the jungle canopy; and

FIGURE 4 illustrates one form of valve release mechanism for intercoupling the gas bottle and balloon of the present invention illustrated in FIGURE 1;

FIGURE 4*a* is a view taken along section line 4*a*—4*a* of FIGURE 4.

Referring now to the drawings, there is shown in FIGURE 1 an antenna package **9** mechanized in accordance with the present invention which is positioned on a grenade launching adapted **10** affixed to the muzzle of a rifle **12**. The antenna package **9** contains an antenna wire **19** that is to be erected above the jungle canopy.

It should be expressly understood, at this time, that other means of launching a projectile than a rifle, such as for example, a flare gun or a fleld mortar or other type of projecting mechanism may be adapted to launch the antenna package of the present invention.

Referring with particularity to the mechanization of the antenna erecting mechanism as illustrated in FIGURE 1, the antenna package **9** comprises features analogous to a projectile including a nose cone **13** fitted within a cylindrical container **11** to which is firmly attached a tail assembly including a launching tube **16** having a set of four control fins **21** positioned thereon at 90° angles from one another around the launching tube. A set of four radial arms **23** are attached to the container **11** by a set of corresponding spring brackets **25**. The radial arms are firmly locked in place adjacent the tail assembly

during the launching of the antenna package, but the locking mechanism is tripped open as the radial arms brush through the tree foliage. This allows the spring brackets **25** to extend the radial arms outward from the launching tube for later supporting part of the antenna package in the jungle canopy.

More particularly, the nose cone **13** is constructed to have a gas container **14** therein. The nose cone may be manufactured from a number of suitable materials (such as, for example, stainless steel) capable of withstanding high gas pressures. Thus, while the nose cone would be extremely rugged if manufactured using stainless steel, this metal in the suggested form is relatively light in weight and does not affect the aerodynamic stability of the projectile. The container **11**, on the other hand, is normally manufactured of an electrically nonconductive material (such as, for example, Fiberglas) to insulate the antenna from the moist foliage when the container lodges in the jungle canopy.

The interconnection of component parts within the container **11**, during the launching phase of operation of the present invention, centers around a collapsed balloon **15** to which one end of a coiled antenna wire **19** is attached. The gas container **14** of the nose cone is temporarily connected to the baloon **15** by a valve-release mechanism **17** that interconnects the two during the launching and balloon inflation phases of operation. The valve-release mechanism **17** is initially actuated by a lever arm **54** connected by a low tensile strength cord **80** to a terminal **20** located on the inner wall of the container **11**. Furthermore, an electrical connector **31** is provided in the bottom of the container **11** for interconnecting the second end of the antenna wire **19** and a length of transmission line **30**, the transmission line leading from the antenna package to a spooling apparatus **40** in which the transmission line is uniformly coiled.

Spooling apparatus **40** may comprise, for example, a removable plug **42**, around which the transmission line may be coiled; a container having a small aperture **45** therein through which the transmission line is passed to the antenna package; an electrical connector **43**, mounted to the bottom of the container, to which the end of transmission line **30** is fastened and to which may be also coupled the radio transmitting and receiving equipment; and a spike member **41** that extends downwardly from the container so as to enable the spooling apparatus to be affixed to the ground, thereby giving the apparatus adequate support during the launching of the antenna package. The dispensing of transmission line from the container is accomplished without drag and friction of moving reels or parts. More particularly, the transmission line is wound so as to dispense from the hollow center of a cone of transmission line when the plug **42** is removed. Accordingly, there are no commutators and no reliability problems usually associated with the commutator operation.

Balloon **15** may be fabricated of any of a number of well known flexible materials (as, for example, rubber or Mylar) and must be of adequate size to provide the necessary buoyancy for supporting only the weight of the antenna wire. For example, it has been calculated that a balloon having a diameter of 2 ft., which is inflated with helium gas, would adequately support the weight of 0.293 pound of antenna wire **19**, radial arms **23** being used to support substantially all the weight of the antenna package (less its nose cone) and to counteract the downward pull of the transmission line.

Referring now to FIGURE 1*a*, there is shown an end view of antenna package **9** illustrating the relative positions of the control fins **21** and the radial arms **23** that are connected to the launching tube **16** and the container **11**, respectively. In addition, it is shown that the connector **31** is located in the base of the container **11** adjacent to one of the control fins **21**.

In FIGURE 1*b* there is illustrated an alternate embodiment of the container **11** of the antenna package that provides a different method of releasing the balloon **15**. More particularly, the gas containing nose cone **13'** is made an inseparable part of the container **11'**; and, furthermore, the container **11'** has a large aperture cut in one side thereof. From the bottom of this aperture, a sloping inner surface rises to the top of the container. On this sloping inner surface would be positioned the collapsed balloon connected, for example, to a time actuated valve **17'** that, as before, interconnects the gas chamber and the balloon. The inflating balloon would draw the antenna wire **19'** from a lower compartment through small aperture **18** in the inner slope. Employing this embodiment of container would facilitate the use of a larger balloon which would be ejected from the side of the container as it was being inflated and which would be capable of supporting the entire weight of the antenna package, including nose cone **13'**. This feature would make unnecessary the operation, hereinafter described, of separating the nose cone from the main body of the antenna package.

In FIGURE 1*c* is illustrated one type of locking mechanism that may be employed in the mechanization of the projectile-like antenna package for temporarily locking the radial arms **23** close to the tail assembly during the launching phase of operation of the antenna package. Specifically, as projectile **9** is launched, a hook **27**, pivotally coupled to radial arm **23**, is engaged with with a corresponding hook **28** affixed to the launching tube **16**. In this position, radial arm **23**, coupled to the container **11** through the spring-biased mount **25**, does not interfere with the passage of the projectile through the foliage of the jungle canopy. A spring **26** of the spring mount **25** is held in compression when radial arm **23** is locked in this vertical position. As the radial arm pushes against the foliage, while passing through the jungle canopy, the arm is slightly depressed inward towards the tail assembly, thereby disengageing hook **27** from hook **28**. Hook **27** is pivoted downward by gravitational forces away from hook **28** while, simultaneously, spring **26** acts to swing the radial arm outward in a horizontal direction from the tail assembly. If the hooks are prematurely disengaged by the radial arms contacting a low branch before the antenna package is fully clear of the jungle canopy, the radial arms are capable of being readily pivoted downward back into their vertical position when further foliage is encountered by the projectile. This takes place without significantly altering the flight path of the projectile.

One type of biasing spring **26** that may be used in the mechanization of spring mount **25** is illustrated in FIGURE 1*d*. As is readily apparent, the dual-spiral configuration of the spring **26** enables the spring to readily lift the radial arm **23** to a postion outwardly directed from the projectile.

Referring now to FIGURE 2 and assuming that an instant communication link is to be established between a remote location and a station located in a jungle terrain, and that the jungle station must have its antenna projected to a position above the tree tops, the antenna package **9** is placed on the grenade launching adaptor attached to the muzzle of the rifle **12**. Spike **41** of the transmission line container **40** is placed in the ground in front of the rifle; the transmitter-receiver is attached to the connector **43**; and the plug **42** is removed from the container. The rifle is placed in a suitable position for aiming and launching such a projectile and is fired. The antenna package drives its way through the tree foliage drawing behind it the transmission line. As the antenna package **9** passes through the jungle canopy, tree foliage trips the locking mechanism causing the radial arms to be swung outward from the projectile body by the biasing spring **26**. When the antenna package has reached a predetermined altitude, as determined by the length of trans-

mission line attached to it, it stops; and the inertia of nose cone **13** causes it to separate from the restrained container **11** of the antenna package. As the nose cone pulls away from the container, it draws the collapsed balloon **15**, valve release mechanism **17**, and the antenna wire **19** from the container; and the low tensile strength cord **80**, attached to the lever arm **54** of valve release **17**, is drawn tight. Just before the low tensile strength cord breaks, it moves lever arm **54**, thereby opening valve **17** and enabling balloon **15** to be inflated by the gas stored in the nose cone's gas container **14**. When the balloon has inflated to its full diameter, the valve release mechanism **17** separates from the balloon; and the gas container and valve continue on the projected path away from the balloon. Balloon **15**, thereafter, lifts the antenna wire into the air from the container **11**; but, because of the added weight of the container and transmission line, the balloon and container descend and lodge the extended radial arms in the canopy, permitting the balloon to support adequately the antenna wire in an erect position. The radial arms make an electrical as well as mechanical contact with the moist foliage and enable the antenna to operate as a type of ground plane antenna. It will, of course, be recognized that the length of the antenna wire **19** is dependent up on the particular frequency of radio transmission. Once fully extended, however, the antenna is ready for the reception or emission of radio signals.

Referring now to FIGURE 3, the container **11** of the antenna package is shown with the antenan wire **19** fully extended therefrom and supported by inflated balloon **15**. As is readily apparent, radial arms **23** have been fully extended by spring mounts **25** so as to enable the package to be lodged in the jungle canopy, thus supporting the weight of the container **11** and the transmission line **30**, coupled to electrical connector **31**. The antenna, so erected, is a self-supported, efficient vertical antenna, fed by a vertical length of transmission line. With the antenna above the jungle canopy, transmitting and receiving efficiency is considerably increased since the heavy tree foliage no longer shields the propagating field of the antenna.

In FIGURE 4 is illustrated an extremely simple valve-release mechanism that could be employed in the mechanization of the antenna package of the present invention. More specifically, there is shown in FIGURE 4 one type of valve release mechanism **17** including a tube **48** for interconnecting the gas container **14** and the balloon **15**. In the tube **48** is located a butterfly valve **50** rotatably mounted on a shaft **52** and actuated by the lever arm **54**. In the closed position of the valve **50**, the ends thereof are held against a pair of stops **55** which provide a tight seal to gas in the gas container **14**. Located in the wall of tube **48**, on the gas container side of valve **50**, is mounted a flexible diaphragm **60** to which is attached a pushrod **62**. To the end of the rod **62** is pivotally mounted one end of a lever arm **64**, the other end of the lever arm **64** being machined so as to form a knife blade **65** that is normally recessed in a slot **66** in the wall of the tube **48**. The balloon **15** is attached to the tube **48**, during the launching and inflation phases of operation of the present invention, by means of a cord **68** tied around the balloon **15** and laid in a slot **67** around the tube **48**. The cord is tied so as to pass over the knife slot of the tube **48** such that, when the diaphragm **60** returns to its low pressure position, the knife blade **65** is pressed firmly against the tie string so as to sever it and release the balloon from the tube.

During the inflation phase of operation of the present invention, a check valve **70**, located in the neck of the balloon **15**, is opened by the pressure of the gas flowing from the gas container **14** to the balloon **15** through the valving mechanism. More particularly, in the closed position of the valve **50**, a ball **72** of the check valve **70** is held tightly in the narrowest dimension of the balloon neck aperture. However, when the valve **50** is open, thereby allowing the gas in the gas container **14** to be released into the balloon, the ball **72** is driven downwards into the balloon and is held against a multiapertured plate **74** built within the neck of the balloon. The apertures in the plate **74** allow the gas to pass freely into the balloon, but inhibit the ball **72** from passing thereinto. When the balloon is fully inflated and is subsequently cut free of the tube **48**, the gas pressure within the balloon **15** drives the ball **72** back into the narrow aperture of the balloon neck, thereby closing the check valve **70** and sealing the gas in the balloon.

To further clarify the sequence of operation of the valve release mechanism **17**, it should be noted that the gas pressure in the gas container **14** holds the diaphragm **60** in its fully extended position, thereby holding the knife blade **65** on the lever arm **64** in the recessed slot **66** away from the tie cord **68**. Slot **66** is shaped with rounded corners and smooth surfaces such that the balloon may be readily pushed behind the knife blade into the slot without tearing the balloon. However, when the valve **50** is opened to inflate the balloon, thereby reducing gas pressure in the container **14**, the knife blade is pulled out of the slot by the lever arm **64** and is pressed against the tie cord. This movement is sufficient to cut the tie cord, enabling the nose cone and valve to pull away from the balloon and continue on the projected path.

The valve **50** is mounted within the tube **48** such that when the arm **54** is pulled downward by the low tensile strength cord **80**, a spring catch is released which causes valve **50** to rotate and stop in its fully open position, 90° away from the closed position. To further illustrate the valve action, a cross-sectional of tube **48**, just below valve **50**, is illustrated in FIGURE 4*a*. In this figure the valve **50** is illustrated in the process of opening, that is, a spring **56** mounted on the shaft **52** is acting on the valve **50** to rotate the valve from its closed to its fully open position.

It is to be understood that the above described arrangements are illustrative of the application of the principles of the invention. It will, of course, be recognized that numerous modifications and alterations may be made in the mechanization of the above described antenna erecting mechanism without departing from the spirit or scope of the invention. Thus, by way of example and not of limitation, many well known valve mechanisms and release mechanisms, known to those skilled in the art, may be utilized in coupling the gas container to the balloon. Moreover, a number of valves commonly employed in the balloon art are equally applicable for sealing the balloon, once fully inflated. In this regard, a needle valve comprising a blunt needle, similar to that used for inflating basketballs and the like, may be used as the transfer link between the gas container and the balloon. A time-actuated valve device may be substituted for the control between the gas container and the needle valve, and a set of disconnecting push arms may be included for urging the balloon away from this needle valve. Furthermore, the device described herein is illustrated as employing the lifting power of a rifle for launching the antenna package above the tree level. Equally efficient means of launching the projectile, as for example, a flare gun, a field mortar, or compressed air mechanism, would be fully within the scope of the present invention. Still further, a number of means of securing the spring loaded radial arms in a downward position during the launching phase of operation of the antenna package could be used in mechanizing the projectile. For example, the radial arms could be secured in place by means of a slip ring that is released by a lanyard attached to the transmission line spooling apparatus. The lanyard would be the same length as the transmission line, such that the slip ring would be pulled free and the radial arms extended when the maximum altitude was reached by the projectile. Another embodiment of the present invention could employ other small antenna configurations that are not supported by a balloon, but which are self-supported whip or beam

antennas pneumatically ejected from the antenna package, once lodged in the tree tops. Accordingly, it is to be expressly understood that the scope of the present invention is to be limited only by the scope of the appended claims.

What is claimed is:

1. Apparatus for raising a portable field antenna above heavily wooded areas, said apparatus comprising:
- first means for launching a projectile-like body to a predetermined altitude;
- a projectile having a container therein and being engageable with said first means for being launched thereby;
- an antenna housed within said container;
- second means housed within said container for extending said antenna from said container;
- third means connected to said antenna for supporting said antenna when extended;
- a length of transmission line connected to said antenna, said length of transmission line defining said predetermined altitude;
- fourth means for dispensing said transmission lines;
- a plurality of spring-biased arms mounted to the side of said projectile, and radially extendable therefrom; and
- means for holding said arms close to said projectile as said projectile is launched and for pivoting said arms to extend outward from said projectile when said arms contact foliage of the wooded area, said arms being operative to support said container on said foliage and to provide a ground plane for said antenna.

2. Apparatus for raising a portable field antenna system as defined in claim 1 wherein said first means for launching a projectile-like body comprises a rifle adapted for the lunching of rifle grenades.

3. Antenna-erecting apparatus for carrying an antenna above thick jungle foliage and maintaing it there in an operative position, said apparatus comprising:
- a container;
- a launching tube connected to said container, said tube having a plurality of control fins attached to the outside surface thereof;
- a vessel for containing gas under pressure, said vessel being joined to said container;
- an antenna housed within said container;
- support means transiently housed within said container and connected to said container for withdrawing said antenna from said container and maintaining said antenna in an operative position once it is withdrawn;
- valve means for selectively conveying gas from said vessel to said support means;
- a plurality of arms pivotally mounted to said container to be normally close thereto and being spring-biased to extend outward in a radial direction from said container for supporting said container in the jungle foliage; and
- means actuated by contact with the jungle foliage for pivoting said arms to their outwardly extended positions.

4. The antenna-erecting projectile defined in claim 3 wherein said launching tube is cylindrical in shape so as to engage with a rifle grenade launching adapter.

5. Apparatus for raising a portable field antenna, said apparatus comprising:
- launching means;
- a projectile having a cavity therein and being engageable with said launching means;
- means connected to said projectile for lodging said projectile in tree foliage;
- an antenna housed within said projectile;
- a transmission line connected to said antenna;
- means for containing and dispensing said transmission line as said projectile is launched;
- a nose cone having a pressure vessel therein for containing gas at a first pressure, said nose cone being frictionally engaged at one end of said projectile;
- an inflatable balloon temporarily housed in said projectile, said balloon being connected to said antenna for extending said antenna from said projectile;
- valve means interconnecting said pressure vessel and said balloon for conveying gas to said balloon;
- control means connected to said valve means and responsive to gas in said vessel at a second pressure lower than said first pressure for disconnecting said valve means from said balloon; and
- means for activating said valve means including apparatus for placing tension on said transmission line at a predetermined altitude of said projectile, whereby said nose cone is separated from said projectile and draws said balloon therefrom.

6. Apparatus for raising a portable field antenna above heavy tree foliage, said apparatus comprising:
- a projectile having a cavity therein;
- means for launching said projectile above the tree foliage;
- an antenna housed within the cavity within said projectile;
- means for extending said antenna from said projectile when said projectile has travelled to a predetermined altitude above the tree foliage;
- a length of transmission line connected to said antenna, said length defining said predetermined altitude;
- means for containing and dispensing said transmission line as said projectile is launched;
- a plurality of spring-biased arms mounted to the side of said projectile, said arms being locked initially in a position generally parallel to the longitudinal axis of said projectile so as to provide little resistance to the passage of said projectile through the tree foliage; and
- locking means for holding said arms close to the side of said projectile and, in response to contact with the tree foliage, for extending said arms to a position substantially perpendicular to the side of said projectile, whereby said projectile as it descends will lodge in the top of the tree foliage with said antenna extended therefrom.

7. Apparatus for raising a portable field antenna as defined in claim 6 wherein said arms are made from a conductive material and conductively engaged with the tree foliage so as to operate as a ground plane for said antenna.

8. Apparatus for establishing a radio communication from a location beneath dense foliage, said apparatus comprising:
- a projectile having a cavity therein;
- means for launching said projectile through dense foliage;
- an antenna transiently housed in the cavity in said projectile;
- radio apparatus;
- a length of transmission line, one end of which is connected to said antenna and the other end of which is connected to said radio apparatus;
- means for extending said antenna from said projectile when said projectile has reached a predetermined altitude above the foliage; and
- means for lodging said projectile on top of the foliage for maintaining said antenna thereabove.

9. Apparatus for establishing radio communication as defined in claim 8 wherein said means for extending said antenna includes a gas container frictionally engaged with one end of said projectile, a balloon housed within said projectile, a valve coupling said gas container and said balloon, said valve having a control arm coupled to the inside of said projectile, whereby when said projectile has reached said predetermined altitude, said gas container is disengaged from said projectile and draws said balloon from said projectile, thereby causing said valve to be actuated to allow gas to flow from said gas container to said

balloon, said predetermined altitude being defined by said length of transmission line.

10. Apparatus for establishing radio communication as defined in claim **9** wherein said means for lodging said projectile on top of the foliage includes a plurality of spring-biased arms pivotally mounted to the sides of said projectile, and locking means for initially holding said arms close to and substantially parallel with the side of said projectile and, in response to contact with the tree foliage, for extending said arms to a position substantially perpendicular to the side of said projectile, whereby said projectile as it descends will lodge in the top of the tree foliage with said antenna extended therefrom.

11. In combination:

a housing having selectively extendable means for permitting streamlined projection of said housing and for subsequently lodging the housing in a desired position;

radio apparatus spaced from said housing;

a balloon;

an antenna wire for interconnecting said housing and said balloon; and

a lead-in wire connecting said antenna to said radio apparatus.

References Cited by the Examiner

UNITED STATES PATENTS

1,121,091	12/1914	Hale	42—1.2
2,587,564	2/1952	Williams	244—31
2,628,307	2/1953	Lloyd et al.	325—114
2,717,309	9/1955	Campbell	325—115 X
2,831,967	4/1958	Bayze	325—112
2,907,875	10/1959	Seyfang	325—11
3,098,445	7/1963	Jackson	102—34.1
3,156,185	11/1964	Hermann et al.	102—1

HERMAN KARL SAALBACH, *Primary Examiner.*

M. NUSSBAUM, *Assistant Examiner.*