L. A. DELPEUCH.

WHISTLE, SIREN, OR THE LIKE.

APPLICATION FILED SEPT. 19, 1907.

957,661.

Patented May 10, 1910.

Fig. 1.

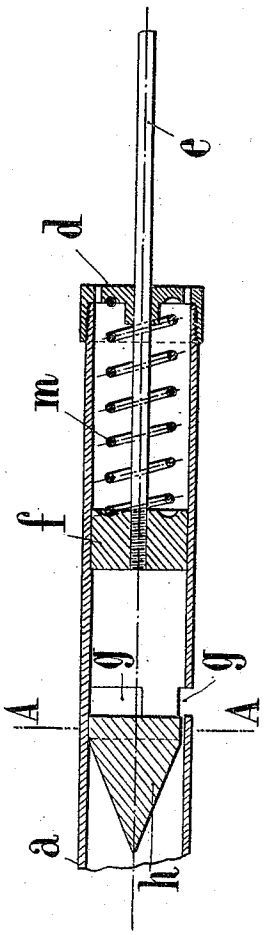

Fig. 2.

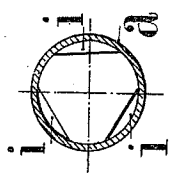

Fig. 3.

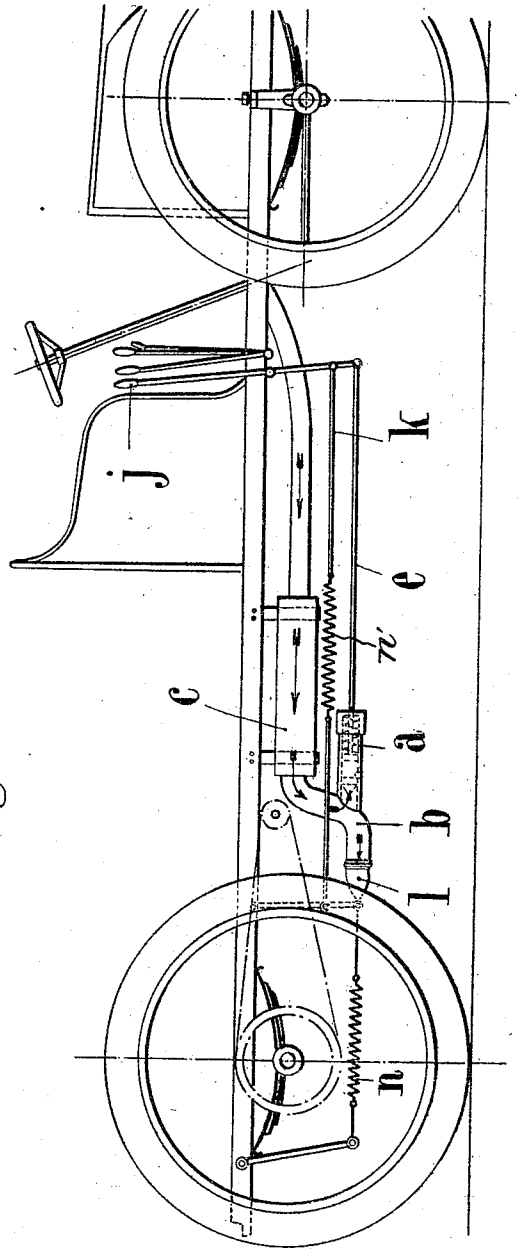

WITNESSES

Karl Kaelble.

Henry J. Sulzbier.

INVENTOR

Leon Antoine Delpeuch

BY

Gowen & Gowen

ATTORNEYS

UNITED STATES PATENT OFFICE.

LEON ANTOINE DELPEUCH, OF NEUILLY-SUR-SEINE, FRANCE, ASSIGNOR TO AUGUSTE GILDENMEISTER, OF PARIS, FRANCE.

WHISTLE, SIREN, OR THE LIKE.

957,661. Specification of Letters Patent. Patented May 10, 1910.

Application filed September 19, 1907. Serial No. 393,632.

To all whom it may concern:

Be it known that I, LEON ANTOINE DELPEUCH, a citizen of the Republic of France, and resident of Neuilly-sur-Seine, France, have invented certain new and useful Improvements in or Relating to Whistles, Sirens, or the Like, which improvements are fully set forth in the following specification.

This invention relates to an improved whistle for use in connection with motor-cars, boats or other apparatus provided with petrol, steam or compressed air engines.

The object of the invention is to provide a whistle, the characteristic features of which will be hereinafter described, to advantageously replace any existing kind of horn or siren and which may be heard from a considerable distance, while owing to the construction of the same, sounds are emitted which can be varied by the operator as desired.

A form of construction of the whistle according to this invention is illustrated in the accompanying drawing in which:—

Figure 1 is a vertical longitudinal section through the axis of the whistle. Fig. 2 is a vertical cross-section on the line A—A of Fig. 1. Fig. 3 is a general view showing the arrangement of the whistle as applied to a petrol driven motor vehicle.

The whistle comprises a tube *a* (Figs. 1 and 2) connected at one of its ends to the exhaust pipe *b* of the muffler *c* (Fig. 3). The other end of the tube *a* is provided with a screw cap *d* (Fig. 1) through which the rod *e* of the piston *f* slides, the said piston moving in the interior of the said tube so as to close or open a number of openings *g*. A spring *m* is arranged between the piston *f* and the screw cap *d*.

In the interior of the tube *a* is arranged a triangular pyramid *h*, the angles of which are rounded off to suit the inner curvature of the tube, so that three openings *i* (Fig. 2) are formed through which the compressed gases escape from the muffler *c*.

Obviously the described apparatus constituted by the pyramid *h*, tube *a* and its orifices *g*, forms a high pressure whistle. The piston *f* sliding in the tube *a* forms a resonance chamber the size of which is adjustable and emits a varying sound according as the piston is moved away from, or brought nearer to, the pyramid, so that the sounds of the whistle are variable.

A hand lever *j* as shown in Fig. 3, enables the rod *g* of the piston *f* to be operated in order to open both the orifices *g* and *i* at the same time. By the same movement, by means of a rod *k* (Fig. 3), the open end of the exhaust pipe *b* is closed by means of a cap *l*, so that the gases are forced to pass through the whistle.

In order to cause the whistle to cease, the lever *j* is brought back into its first position, the result being the closing of the orifices *g* and *i* by the piston which is brought back by the action of the spring *m* which latter, resting against the cap *d*, has the tendency of always bringing the piston *f* back. At the same time, owing to a spring *n*, the cap *l* opens the exhaust pipe *b*. The gases then follow their normal path without influencing the whistle.

The springs *n* and n^1 are of such relative strength that when the piston *f* is in the position to close the orifices *g* and *i*, thus preventing the passage of the gases therethrough, the spring *n* will lift cap *l* off from its seat and thereby permit the escapement of the gases. When, however, the lever *j* is operated the tensioning of the spring n^1 will exact a greater force than the spring *n* and, therefore, cause the cap to be tightly seated on the pipe or channel *b*.

I have described one embodiment of my invention, but it is clear changes may be made therein without departing from the spirit of the same; nor do I wish to limit myself to the use of the device described solely to automobiles since such a device has other modes of application.

Claim.

1. The combination with a whistle comprising a piston-tube closed at one end and provided with outlet-orifices, a fixed pyramid in said tube, said pyramid being cut away to provide passages between its edge and the wall of said tube adjacent to said outlet-orifices and a spring-actuated piston in said piston-tube adapted to normally close said openings and orifices, of means for operating said piston, an exhaust-pipe, a branch exhaust-pipe connected with the opposite end of the piston-tube, means for closing the exhaust-pipe, and a spring-actuated lever mechanism connecting said closing means with the operating means of the piston.

2. In a motor-vehicle, a whistle having a

piston-tube having orifices and extending longitudinally of the frame of the vehicle, an exhaust-pipe extending downwardly into communication with the rear-end of the whistle and then extending rearwardly, a cap adapted to close the rear-end of the exhaust-pipe, a lever carrying said cap on its lower end, resilient means tending to move said cap from the rear-end of the exhaust-pipe, a fixed pyramid in the piston-tube, said pyramid being cut away at its edge to form passages between the pyramid and the wall of the tube adjacent to said outlet-orifices, a piston slidable in said piston-tube and adapted to close said orifices, resilient means tending to move said piston rearwardly, a hand-lever pivoted to said frame and extending below the same, a piston-rod connecting the lower end of said hand-lever to said piston, and resilient means connecting together intermediate points of both of said levers.

3. In a motor-vehicle, a piston-tube extending longitudinally of the frame of the vehicle, an exhaust-pipe extending downwardly in communication with the rear-end of the piston-tube and then extending rearwardly, a rearwardly-pointing pyramid fitting in said piston-tube and cut away at its edges to form orifices, said piston-tube being also provided with orifices adjacent to said first-named orifices, a hand-lever pivoted to and extending above and below said frame, a piston slidable in said piston-tube and adapted when in its rearmost position to close and cover all of said orifices, a screw-cap closing the forward end of the piston-tube and having a central perforation, a piston-rod connected to the lower end of said hand-lever and passing through said central perforation and secured to said piston, a helical spring between said screw-cap and piston and surrounding said piston-rod, a cap-carrying lever pivoted to said frame, a cap carried on the lower end of said cap-carrying lever and adapted to close the rear-end of the exhaust-pipe, a cap-closing rod having an intermediate resilient portion and having its opposite ends attached to intermediate points of said levers, and a spring having its rear-end connected to said frame and its forward end to the lower end of the cap-carrying lever.

In testimony whereof I have signed this specification in the presence of two subscribing witnesses.

LEON ANTOINE DELPEUCH.

Witnesses:

EMILE LEDRET,

H. C. COXE.