Jan. 9, 1940. L. W. REIS 2,186,496

ADJUSTABLE LAMP SOCKET

Filed July 6, 1938

Fig. 1.

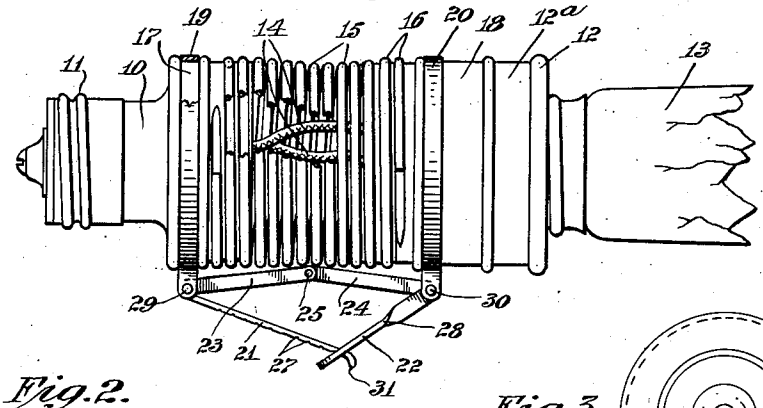

Fig. 2.

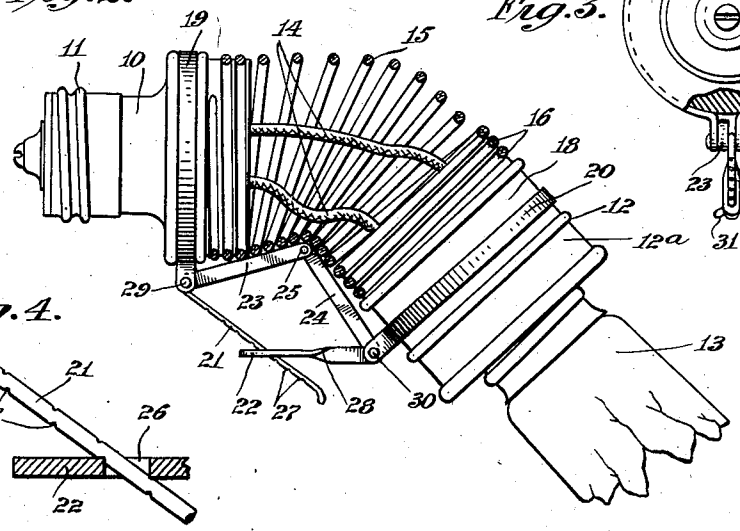

Fig. 3.

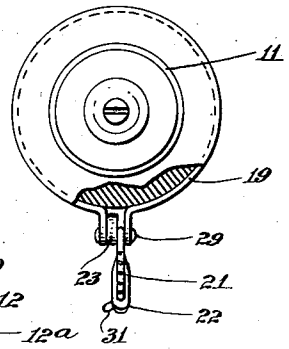

Fig. 4.

Fig. 5.

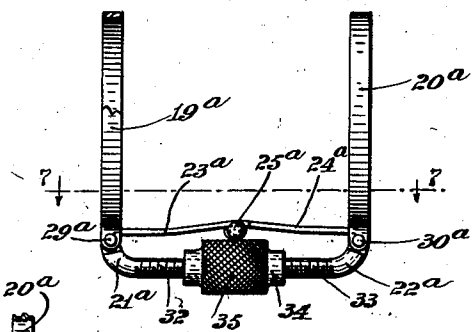

Fig. 6.

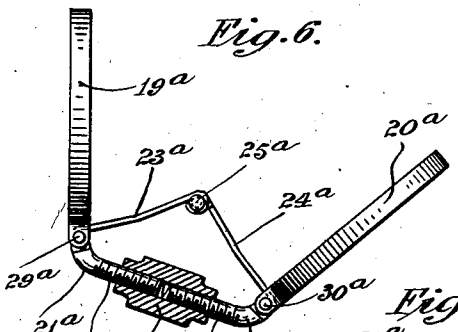

Fig. 7.

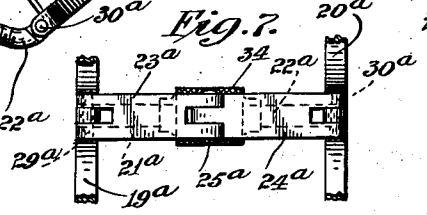

INVENTOR
Leonard W. Reis
BY
ATTORNEY

Patented Jan. 9, 1940 2,186,496

UNITED STATES PATENT OFFICE

2,186,496

ADJUSTABLE LAMP SOCKET

Leonard W. Reis, Jersey City, N. J., assignor of one-half to Edwin Werner, New Dorp, Staten Island, N. Y.

Application July 6, 1938, Serial No. 217,671

8 Claims. (Cl. 248—274)

This invention relates to adjustable supports for lamps of the type capable of being used in store windows or for photographic purposes and wherever else one or more beams of light are required in a particular direction, and has for its object to provide a simple and satisfactory device of this class, capable of being easily adjusted to substantially any acute angle to the plug axis, in any direction.

Referring to the drawing:

Fig. 1 shows one embodiment of this invention.

Fig. 2 is a view of the device of Fig. 1 when the lamp socket is angularly adjusted with respect to the axis of the support or plug.

Fig. 3 is an end view of the device of Fig. 1.

Fig. 4 is a detail of the latch and its cooperating catch.

Fig. 5 illustrates another embodiment of this invention without showing the connected plug and socket members or spring.

Fig. 6 illustrates the device of Fig. 5 when adjusted to bring the lamp socket at an angle to the plug.

Fig. 7 is a section on the line 7—7 of Fig. 5.

The plug member 10 is provided with the usual metal threads for reception in a lamp socket. A lamp socket 12 containing an incandescent lamp bulb 13 or the like is connected by flexible insulated conductors 14 with the plug or other support 10 and is adapted to be bent at an angle to the supporting plug in order to direct a spot light wherever desired. The groove 12a on the socket enables a reflector to be attached.

A coil spring 15 is threaded on the outside of the plug and socket members, a few turns 16 at each end of the spring being received in a threaded groove formed in the plug and socket members. Preferably the threaded groove on these members is made of slightly larger diameter than the spring when unstressed. As shown in Fig. 1 the free convolutions of the spring between the plug and socket members are of generally cylindrical shape and not substantially longer axially than the diameter of the spring. Only enough length of spring is needed to effect the desired bending or transverse flexure of the spring. The spring is preferably of hardened spring steel coated with nickel, brass or other finish to harmonize with the finish of the surrounding metal parts.

Beyond the end of the spring the plug 10 is provided with a groove 17 and the socket is provided with a wider groove 18. Rings 19 and 20 are clamped loosely enough in these grooves to enable the rings to be easily rotated in these grooves around the spring or its axis. These rings carry a latch or catch or other appropriate means for flexing or holding the spring 15 transversely flexed the desired amount.

The latch 21 is pivoted to the ring 19 and is received within a recess or perforation in the catch member 22. Also pivoted to the rings 19 and 20 are links 23 and 24 pivotally secured together at their adjacent ends 25 near the longitudinal central portion of the spring. The catch 22 is shown as being made of strip material provided with a hole 26 therein for receiving the latch 21. The edges of this hole or perforation 26 are preferably hardened for cooperation with notches 27 or other knurled or roughened portions of the latch 21. Preferably the notches or knurling are on opposite sides of the latch so that diagonally opposite corners of the recess 26 may engage the latch for holding it in position when the spring is bent as shown in Fig. 2. The latch 21 is also preferably made flexible so that it may be bent by the engaging edges of the recess 26 in event the spring is flexed to a greater or less extent than shown in Fig. 2. The twist in the catch 22 is indicated by the numeral 28, which enables the catch to have its recess 26 in position for reception of the latch 21 while the opposite end is adapted for pivotal mounting on the pin 30 carried by the ring 20. The pivot pin 29 on the ring 19 serves as a mounting for both the latch 21 and the link 23, it being understood the link 24 is also mounted on the pin 30. Preferably the latch is provided with an enlarged head 31 to prevent its being withdrawn from the catch perforation. The latch and its catch are preferably short enough to prevent the links 23 and 24 being brought into longitudinal alignment and their becoming angularly disposed in the opposite direction as might a toggle joint. By preventing the links 23 and 24 from coming into alignment, their cooperation with the spring is assured.

The links 23 and 24 serve to press the spring inwardly as shown in Fig. 2 when the socket 12 is placed at an angle to the plug. Another advantage of these links is their ability to assist in keeping both the rings 19 and 20 in substantial alignment and to assist in moving both rings together more easily when the rings 19 and 20 are rotated about the spring prior to flexing the spring in a different direction. This hinge connection constituted by these links 23 and 24 also assists in keeping the latch in its adjusted position and reduces the likelihood of the latch becoming accidentally released. Still another advantage of this hinge joint is its function as

a guide for the contiguous spring convolutions in Fig. 2, reducing the likelihood of their becoming overlapped or riding over one another as might occur in the case of a sharp bend in the spring if this hinged guide member were not present.

The groove 18 is made wider than necessary to receive the ring 20 in order that the side of the ring connected to the latch and hinge joint may be free to yield slightly under pressure of sharply bending the spring. The hinge pin 25 is preferably headed over on each end so that the links 23 and 24 are retained in substantially the same plane. The device shown in Figs. 1 and 2 is screwed into a lamp socket or other receptacle for the plug and the rings rotated until the latch is on the side of the spring toward which it is to be bent. Then with one hand the socket may be bent at the desired angle and the latch automatically engages the catch with the action of a pawl. To release the bent spring it will only be necessary to bend the spring a little more or enough to take the stress off the latch when the end of the catch may be moved by the thumb or finger back towards the headed end 31 of the latch to allow the spring to return to its substantially normal unflexed position shown in Fig. 1.

The device shown in Figs. 5 to 7 inclusive represents another type of holding means for maintaining the spring flexed. The rings 19*a* and 20*a* are similarly located on a plug and socket or other connecting members spaced by a coil spring. In this embodiment the links 23*a* and 24*a* are made of strip material with the flat side contiguous the spring, these links being connected by the pivot or hinge 25*a*. The latch and catch 21*a* and 22*a* are provided with screw threads 32 and 33 upon which a turnbuckle 34 is threaded, the threads 32 and 33 being in opposite directions so that by rotation of the turnbuckle 34 the effective length of the holding device may be shortened so that the spring is held bent as shown in Fig. 6 or lengthened to release the spring to the approximate position shown in Fig. 5. The outside of the turnbuckle is knurled to provide a firm finger grip.

The links 23*a* and 24*a* are shown in Fig. 7 as having bifurcated ends folded around the pins 29*a* and 30*a*. Between these bifurcated ends the holding means 21*a* and 22*a* are pivoted. The device of Figs. 5 to 7 is not adapted in the form illustrated to hold the spring in as much of a flexed position as is the device shown in Figs. 1 and 2.

The device shown in Figs. 1 and 2 may satisfactorily function when the spring is bent substantially to a 90° angle or less, whereas the device shown in Figs. 5 to 7 is only suitable for angles up to about 45°. The turnbuckle type of holding means is also adapted for one-hand operation though it will be found to be more easily operated when two hands are used inasmuch as one hand can take the spring stress off the turnbuckle while the other hand turns it.

Among the advantages of this invention may be mentioned the provision of the wide groove 18 which permits limited movement of the pin 30 longitudinally of the spring especially in taking the stress off the holding means for release of the spring from its flexed position. The insulating body of the plug and socket are preferably of porcelain or of some molded resinous or phenolic condensation product. The threaded grooves on the insulating plug and socket members are preferably made about .003 of an inch larger in diameter than the spring when unstressed to facilitate holding the spring in place and to prevent twisting the flexible conductors inside the spring. When the spring is twisted in one direction it will be found to be capable of rotating within the threaded grooves fairly easily because in threading the spring onto the insulated plug and socket members it will be rotated in a direction tending to expand the convolutions. However this rotation will be limited by the end of the threaded grooves. In this way it is a comparatively simple matter to assemble the spring onto the plug and socket members.

However rotation or twisting of the spring in the other direction tends to contract the convolutions and bind them very tightly on the threaded groove. Because of this characteristic the spring acts to prevent twisting of the flexible conductors, which is not possible in some of the early ball and socket type suggestions. The only twisting of the socket with respect to the plug is of a comparatively few degrees due to the slight expanding or contracting of the spring convolutions. Other types of holding means than the latch and catch or the turnbuckle illustrated may be used. The hinged links 23 and 24 are desirable for the purposes mentioned above. The rings 19 and 20 should be adjustable about the spring in order that the spring may be flexed in different directions. Since it is not ordinarily convenient to easily determine the angular position of the plug and socket members after the plug has been screwed into its support, the device of this invention will ordinarily not be bent until the plug has been screwed home. The spring can then be bent in whatever direction is desired to direct the spotlight and its reflector if used to the desired location. The groove 18 for the ring 20 need not necessarily be wider than the groove 17. In other words, the ring 20 need not necessarily have any longitudinal yieldability or movement. The hinged links and holding means provide a more rugged and rigid construction than would be the case if only a holding means alone were used to retain the spring in bent position.

An advantage of the device illustrated is the ability of the spring to be cooled when some of the convolutions are spaced apart as shown in Fig. 2 whereby heat transmission from one of the connectors to the other is substantially lessened. The flexible conductors electrically connecting the plug and socket may be visible, especially when the spring is flexed. When unflexed or unstressed the convolutions of the spring are preferably slightly spaced apart. No tools are required in adjusting the socket and spring to the required position or in releasing it.

This application is an improvement on my prior application Serial Number 191,886 filed February 23, 1938, for adjustable lamp socket, which has now eventuated into Patent No. 2,149,549 dated March 7, 1939.

The drawing illustrates the construction of the two embodiments of this invention, substantially to scale, except that the notches 27 of the latch 21 are not generally made as large as has been shown. The action of the catch in holding the latch may possibly be better understood if it be imagined the spring, links, and latch, are in substantially the position illustrated with the catch loosely engaging the latch.

To tightly engage the latch the catch is moved in a generally clockwise direction in Fig. 2 until the opposite edges of the perforation tightly grip the latch. By taking tension off the latch 21 by flexing the spring a greater amount, the catch may be easily released.

By making the turnbuckle 34 longer, so that it can cover greater lengths of the threaded portions 32 and 33, the turnbuckle may also be made to function to hold the socket in substantially any position of adjustment from zero to 90°. In this last event of course the turnbuckle is mounted on the rings 19*a* and 20*a* which are rotatably adjustable about the spring so that the socket may be bent in any direction.

I claim:

1. The combination with an electrical connector, of a support therefor, a coil spring threaded on and spacing said connector and support, a pair of flexible conductors within said spring and extending into said support and connector, means for holding the spring transversely flexed, and means comprising articulated links substantially contiguous the spring convolutions on the side most sharply flexed, connected adjacent the ends of the first means, and adapted to push some of the more longitudinally central convolutions inwardly toward said conductors when said spring is flexed to one side.

2. A threaded plug and socket, a pair of flexible insulated conductors connecting them, a coil spring around said conductors and spacing the plug and socket, a ring rotatably secured to each of the plug and socket beyond the spring ends, and a latch and catch carried by said rings, and at least one of said rings being longitudinally shiftable.

3. A plug and socket electrically connected by flexible conductors, a coil spring around said conductors and connecting the plug and socket to limit twisting of the conductors, a turnbuckle for holding the spring flexed transversely, and a support for each end of the turnbuckle secured to the plug and socket.

4. A plug and socket electrically connected by flexible conductors, a coil spring around said conductors and connecting the plug and socket to limit twisting of the conductors, a flexible latch and a catch into which the latch is passed for holding said spring transversely flexed, the recessed portion of the catch being shaped to flex the latch and grip it more tightly as the spring is flexed an increased amount.

5. A plug and socket electrically connected by flexible conductors, a coil spring around said conductors and connecting the plug and socket to limit twisting of the conductors, a ring beyond each end of the spring, links hinged to said rings and hinged together adjacent the longitudinal central portion of said spring for pressing the spring inwardly on one side when flexed, and means also hinged to said rings for holding the spring transversely flexed, said means being adjustable in its effective length to hold the spring flexed different amounts, and said rings, links and means being rotatably adjustable around the spring so that it may be bent in different directions.

6. A plug and socket electrically connected by flexible conductors, a coil spring around said conductors and connecting the plug and socket to limit twisting of the conductors, a ring beyond each end of the spring, links hinged to said rings and hinged together adjacent the longitudinal central portion of said spring for pressing the spring inwardly on one side when flexed, and means also hinged to said rings for holding the spring transversely flexed, said means being adjusthable in its effective length to hold the spring flexed different amounts, and said rings, links and means being rotatably adjustable around the spring so that it may be bent in different directions, said means being short enough to prevent said links being brought into alignment.

7. A pair of electrical connectors each having a body of insulating material around a threaded metal portion, a pair of flexible conductors electrically connecting said connectors, the outer surface and end portion of each connector opposite its metal portion being provided with a few thread convolutions in the insulation, a coil spring threaded onto each connector, said spring being of slightly less diameter than the threads in the insulation in which it is received to limit twisting said conductors, a ring rotatably secured to each connector longtudinally beyond the end of the spring, means hinged to each ring for holding the spring transversely flexed, and means also hinged to said rings and located between the spring and first mentioned means for pressing the adjacent side of the spring inwardly as it is flexed.

8. A pair of electrical connectors each having a body of insulating material around a threaded metal portion, a pair of flexible conductors electrically connecting said connectors, the outer surface and end portion of each connector opposite its metal portion being provided with a few thread convolutions in the insulation, a coil spring threaded onto each connector, said spring being of slightly less diameter than the threads in the insulation in which it is received to limit twisting said conductors, a ring rotatably secured to each connector longtudinally beyond the end of the spring, means hinged to each ring for holding the spring transversely flexed, and means also hinged to said rings and located between the spring and first mentioned means for pressing the adjacent side of the spring inwardly as it is flexed, at least one of said rings being longitudinally shiftable and said second mentioned means comprising at least a pair of links hinged together at their ends remote from said rings, the portion of the spring betwen the adjacent ends of said plug and socket being not substantially longer than its diameter.

LEONARD W. REIS.