Nov. 29, 1927. 1,651,000

A. E. ROSENTHAL ET AL

REMOVABLE FOOT FOR LEGS

Filed July 28, 1926

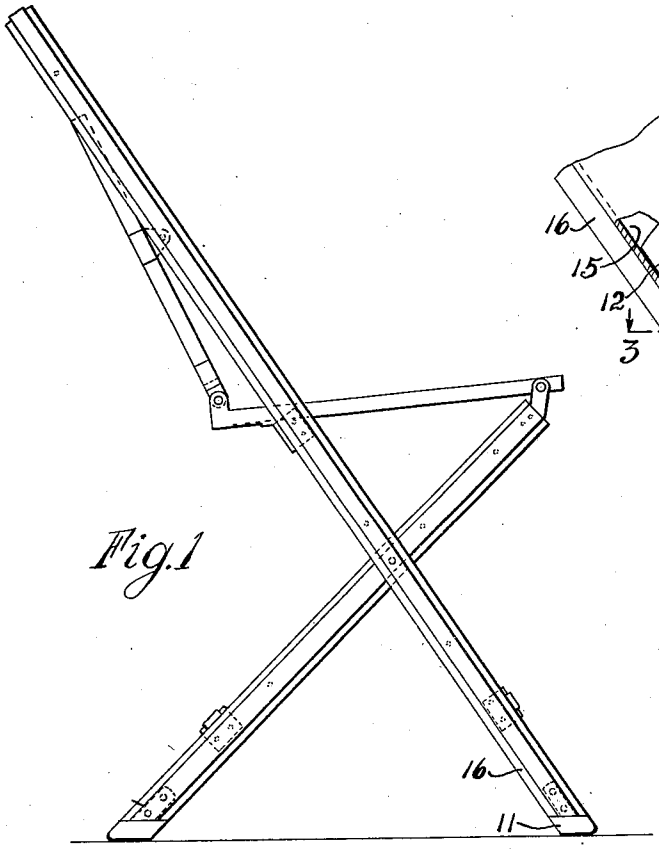

Fig. 1

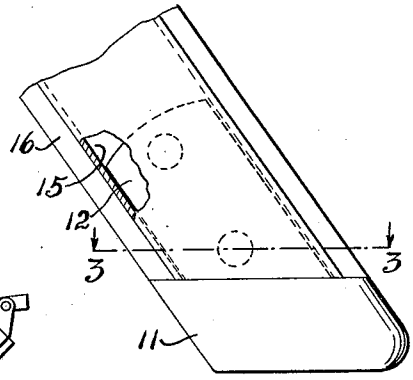

Fig. 2

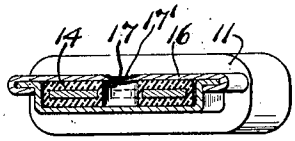

Fig. 3

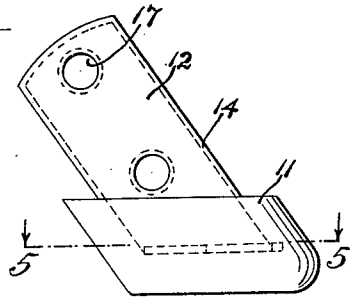

Fig. 4

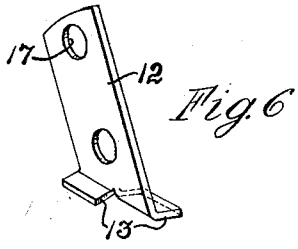

Fig. 6

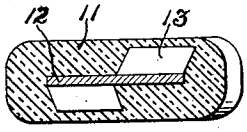

Fig. 5

Inventors:
Aaron E. Rosenthal
Werner E. Clarin

by J. Daniel Stuwe
Attorney.

Patented Nov. 29, 1927. 1,651,000

UNITED STATES PATENT OFFICE.

AARON E. ROSENTHAL AND WERNER E. CLARIN, OF CHICAGO, ILLINOIS, ASSIGNORS TO BEACON STEEL FURNITURE CO., OF CHICAGO, ILLINOIS, A CORPORATION OF ILLINOIS.

REMOVABLE FOOT FOR LEGS.

Application filed July 28, 1926. Serial No. 125,445.

Our invention relates to a removable foot for a leg, and more particularly for the leg of a chair or similar furniture which is provided with a hollow portion. The main object of the invention is to provide a foot which comprises a smooth, pliable and non-abrasive floor engaging portion or shoe, and a plate or member with a lower part arranged to be anchored in said shoe, and having its upper part arranged and covered with anti-slipping material to be mounted in the leg of the chair or similar furniture, so as to be securely held therein but removable therefrom.

Other objects and advantages will become apparent from the following description taken in connection with the accompanying drawing in which,

Fig. 1 is a side view of a chair with my improved foot mounted in position on the leg of said chair;

Fig. 2 is an enlarged view, partly broken away, showing the lower part of the chair leg with the foot mounted in position thereon;

Fig. 3 is a cross section taken on line 3—3 of Fig. 2;

Fig. 4 is an elevational view of the entire foot;

Fig. 5 is a cross sectional view on line 5—5 of Fig. 4 and

Fig. 6 is a view of the metallic member or plate used in the improved foot.

The form of construction illustrated in the drawing comprises a floor engaging portion or shoe 11, substantially in the form of a block, which is preferably constructed of rubber material, or other suitable pliable and non-abrasive material, which will not injure the floors and will lend a slight amount of pliability and resiliency to the chair leg, thus making the chair more comfortable to the user and also avoiding any wobbling of the chair due to any unevenness of the part of the floor on which the chair legs rest. This block or shoe preferably also has the lower edges and corners rounded off or smoothened so as to prevent any scratching or marring of highly polished floors, rugs, etc.

A metallic member, which is preferably arranged in the form of a plate 12, has its lower end split to form lips 13 which extend transversely from the upper stem portion and are anchored and embedded in the pliable block or shoe 11. Said block or shoe is preferably molded or formed upon the lower end and lips of said metallic member under pressure and heat, so as to be firmly attached thereto and substantially made integral therewith. This metallic member or plate has its upper stem portion covered with a pliable, anti-slipping material 14, preferably composed of rubber material, and this stem portion is removably mounted in the hollow part 15 of a leg 16 of a chair or similar furniture, and so as to be held or clamped snugly and firmly in position therein. Openings 17 are preferably also provided through the stem part of member 12 and through the covering material 14, as best indicated in Fig. 4, so as to permit the covering material 14 to be held firmly on the stem part 12, and as the stem part with the covering material fit snugly in the leg, this opening 17 creates suction which helps to retain the foot in the leg. The metal of the leg may also be dented inwardly into opening 17, if desired, as indicated at 17′.

This foot, as disclosed above, provides a particularly desirable and practical foot for this type of chair leg or a leg of furniture having a hollow or tubular portion, and this foot also combines the qualities of inexpensiveness as well as being securely held in the leg and also readily mountable thereon or removable therefrom, and will not scratch the floor at the same time that it prevents slipping thereon.

What we claim as our invention and desire to secure by Letters Patent is:

1. A foot for a hollow leg and comprising a block of rubber material and a metal plate having its lower end split and bent transversely to form lips, said lips being anchored and embedded in said block, and the upper portion of said plate being provided with anti-slipping material with an opening for removably mounting said plate in the hollow leg.

2. In combination with a leg having a hollow portion, a foot including a floor engaging block, and a member having a part anchored in said block and having a stem part with compressible covering material and an opening therein and being removably mounted in said hollow portion, said mate-

rial fitting tight in said portion and said opening providing suction to retain the foot firmly in position in the leg.

3. In combination with a leg having a hollow portion, a foot including a floor engaging block, a metallic member having a part anchored in said block and having a stem part covered with anti-slipping material, said stem part and material having an opening there through and being mounted to fit snugly and be compressed in said hollow portion, and said opening thereby creating suction for holding the foot in the leg.

4. In combination with a leg having a hollow portion, a foot including a block of rubber material, a flat metallic plate having lips at one end embedded in said block and having an upper stem part with rubber material on its exterior and an opening through said stem and material which is tightly but removably mounted in said hollow portion, said opening in the material thus creating suction to retain the foot firmly in position.

5. In combination with a leg having a hollow portion, a foot including a floor engaging block, a member having a part anchored in said block and having a stem part covered with pliable material, said stem part and material having an opening there-through and being mounted in said hollow portion, and the material of the leg being dented into said opening.

In testimony whereof we have signed our names to this specification.

AARON E. ROSENTHAL.
WERNER E. CLARIN.