May 7, 1935. R. HEINRICH ET AL 2,000,017

ELECTRICAL CLEANING OF FLUIDS

Filed April 4, 1931

Fig. 1

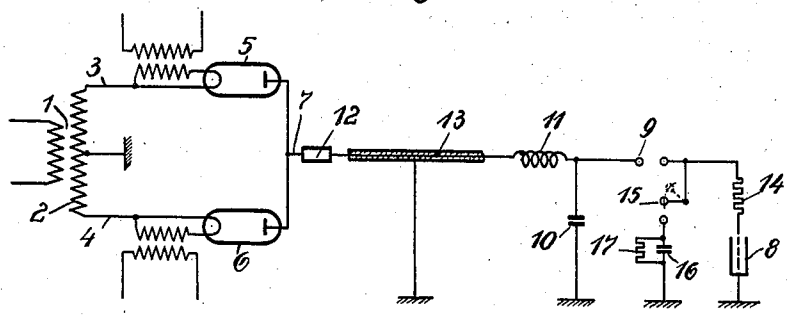

Fig. 2

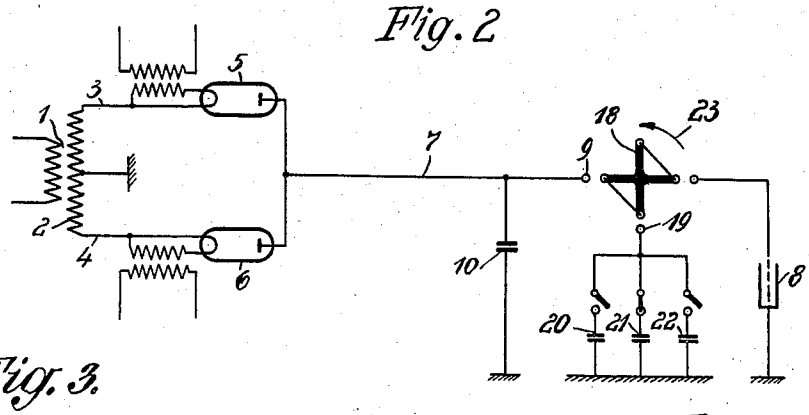

Fig. 3.

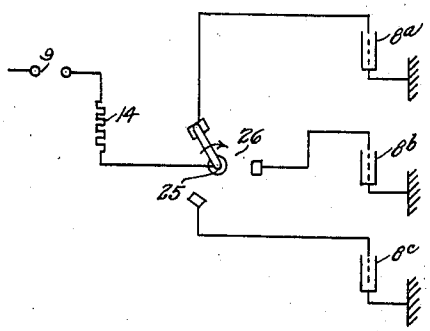

Fig 4

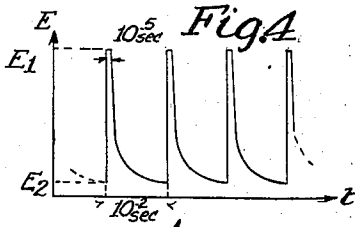

Inventors
Richard Heinrich
Wilhelm Feldmann
By Knight Bros
Attys.

Patented May 7, 1935 2,000,017

UNITED STATES PATENT OFFICE

2,000,017

ELECTRICAL CLEANING OF FLUIDS

Richard Heinrich, Berlin-Sudende, and Wilhelm Feldmann, Berlin-Spandau, Germany, assignors to Siemens-Schuckertwerke Aktiengesellschaft, Berlin-Siemensstadt, Germany, a corporation of Germany

Application April 4, 1931, Serial No. 527,690
In Germany April 5, 1930

12 Claims. (Cl. 183—7)

Our invention relates to cleaning gases, non-conducting liquids and the like electrically.

In electrical purifying or cleaning plants for gases, non-conducting liquids and the like, the experience has been that when certain gases or liquids are being cleaned, flashing over takes place between the electrodes before a sufficiently high voltage is reached and thus before a sufficient current absorption occurs in the electrical precipitator or electro-filter. Our invention, which has the object of eliminating that drawback, is based on the phenomenon observed, for example, when testing insulators, that when voltage impulses of very short duration are employed, flash-overs only occur at a voltage about 80 per cent above the voltage at which flashing over between the two poles otherwise occurs when ordinary alternating current is employed.

When cleaning fluids electrically, according to our invention, also voltage impulses of very short duration, which may be produced, for example, by discharges of a condenser in a manner known per se, are supplied to the electric discharge field. During the working, it is of advantage to supply to the discharge field enough energy to increase the voltage in the cleaning device for instance, in case of gases in the precipitator beyond the flash-over limit only for a short time, after which the voltage drops for a relatively long time to a value below the flash-over limit. In this manner the forming of flashovers in the electrical precipitator is effectively avoided.

The impulse voltages may be produced by means of one of the numerous methods known in the art for producing impulse voltages. An arrangement in which the impulse spark gap is arranged immediately ahead of the electrical cleaning device is particularly advantageous. In this case, it is useful to cool the impulse spark gap by means of a gas current, in order to prevent with certainty the occurrence of premature discharges. The cooling means for the gap are not shown here, since they are well known in the art and do not form an absolutely necessary accessory for the operation of our novel arrangement.

The arrangement may also be made so that the supply cables to the electrical cleaning devices serve as charging capacitances. For this purpose the cables must be well grounded. In that case separate charging capacitances need not be provided. Should a separate charging capacitance be employed, it is advisable to place it between the current generator and the spark gap in the immediate neighbourhood of the latter, in order to avoid disturbances by the self-induction of the lead.

In some cases it may, besides, be advantageous to insert resistances of such a value into the leads to the cleaning device, that a spreading of oscillations toward the energy supply is prevented. It is, finally, also possible to include a self-induction of such value ahead of the charging condenser in the lead to the cleaning device, that it suppresses high-frequency oscillations in the lead between the current generator and the spark gap.

By choosing suitable values for the voltage, the charging capacity and the resistances in the lead to the cleaning device, the frequency of the impulse discharges can be so regulated within wide limits that in each case the most favorable conditions for the operation of the cleaning device are obtained. For example, the spark frequency can, by retarding or reducing the capacitance readily be set from several hundred impulses per second down to very few impulses during that time.

A particularly favorable precipitating or separating effect is obtained, if, according to our invention, the discharge electrode is fed with positive impulse voltages of the described kind. From the insulating layer of dust, with which for instance in dust precipitators the collecting electrode becomes covered, then only a negative corona effect can be produced, which does not reduce the flashover voltage. When employing impulse voltages of the described kind, the discharge electrodes can be easily charged positively, since the delay in the discharge is so long that a flashover between the electrodes cannot occur during the short duration of the impulse voltage. Consequently, the advantage is thereby obtained, that in the electrical cleaning device a field strength much higher than that usually used, may be employed without having to fear that flashovers will occur between the electrodes.

Our invention is illustrated in the accompanying diagram in which

Fig. 1 represents one modification of our invention;

Fig. 2 represents a form in which the discharge system is rendered independent of the power supply system during the time of discharge,

Fig. 3 represents a modification of the precipitator electrodes, applicable to both arrangements, shown in Figs. 1 and 2, and

Fig. 4 represents a time-voltage graph of the discharge impulses.

Referring to Fig. 1, numeral 1 indicates a trans-

former which steps the supply value up to the desired voltage. The middle of the secondary winding is grounded, whereas the two free ends are connected through the leads 3 and 4 over the electronic valves 5 and 6 with a common lead 7, which conveys the high-voltage current to the precipitator 8. In this lead 7, an impulse spark gap 9 is included close to the fluid cleaning device. Immediately before the impulse spark gap 9, a grounded charging capacitance 10 is provided. 11 is a self-induction included in the lead 7 and having a suitable value for suppressing high-frequency oscillations. 12 is a resistance provided in the lead 7 with the object of preventing the spreading of oscillations over the lead 7.

A part of the lead 7 is covered by a cable 13, which is grounded. This cable covering also acts as a charging capacitance.

As mentioned above, it is an improvement to employ partially-suppressed impulse voltages for operating an electric fluid cleaning device, in the particular example shown an electrical precipitator. As tests have proven, it is possible with said partially suppressed impulse voltages to obtain considerably higher intensities of the field than with the normal impulse voltages.

The occurrences during the operation of such an arrangement are shown diagrammatically in Fig. 4 in which the abscissæ represent the time intervals at which the impulses occur and their durations, and the ordinates represent the voltages prevailing at the different time periods. It will be noted that at each occurrence of an impulse the voltage rises abruptly with a practically straight front to its maximum value E_1, remaining at or near that value only a very short time, say 10^{-5} seconds, whereupon the voltage drops, not quite as abruptly, to its minimum value E_2 at which it remains until the next impulse occurs, at a frequency of say 10^{-2} seconds. This minimum valve E_2 is below the voltage at which dangerous space charges are maintained between the precipitator electrodes. It will also be noted that the impulses are uni-directional in contradistinction from the prior art customs of using impulses of alternating polarity.

An arrangement suitable for carrying out the method with a precipitator to which impulse voltages are supplied consists in including a resistance ahead of the discharge space of the precipitator, and in connecting a further, ordinary spark gap, not possessing retardation, in parallel with the precipitator discharge space. The discharge between the discharge and the collecting electrodes can then not develop to a complete flashover, as the spark gap connected in parallel operates shortly before the disruptive discharge would take place in the precipitator, and in operating reduces the voltage between the electrodes of the precipitator to such a degree that a complete flashover and thus a collapse of the field can no more take place. It is further advantageous to make such a shunt gap adjustable. By properly setting the shunt gap, it is possible to control the formation of the partially suppressed impulse-voltage discharge at will.

A further practical arrangement consists in inserting into the lead containing the shunt spark gap, a condenser with a resistor connected in parallel to same, which permits only a partial discharge of the system of discharge electrodes. After the shunt gap has operated, a residual charge then still remains on the precipitator electrode system, and this residual charge is sufficient to effect that the suspended particles in the precipitator continue to be precipitated, without, however, a flashover being able to take place between the electrodes.

For this purpose, in the example illustrated in Fig. 1, a retarding or delaying resistance 14 is inserted in the high-voltage lead immediately before the precipitator discharge electrodes; and ahead of said resistance, the adjustable spark-gap 15, which is grounded and has no retardation, is branched off in parallel to the precipitator 8. In the lead from spark-gap 15 to ground, the condenser 16, bridged by the leak resistor 17, is inserted. When this arrangement is operated with impulse voltages, the discharge between the discharge electrodes and the collecting electrodes cannot develop to a complete breakdown, as shortly before the breakdown would take place the spark gap 15 operates and reduces the voltage between the electrodes of the precipitator to such a degree, that a complete flashover cannot occur.

The condenser 16 takes a part of the discharge current passing through the spark-gap 15 and this charge leaks off slowly through the resistor 17. In this manner is achieved that the charge on the system of discharge electrodes does not drop completely to zero, but remains to a sufficient degree to maintain the precipitation.

A further improvement can be obtained by arranging the plant in such a manner that at the moment of impulse the impulse circuit is rendered completely independent of the high voltage current source. By this means the impulse discharge is prevented from producing any reactions in the plant generating the high-voltage, and the transformers and rectifiers etc. are thereby protected against overloads. For this purpose the condenser placed before the spark gap is built as a large collecting condenser. Between the two poles of the spark gap, a rotating distributor is placed which at first charges a smaller impulse condenser, which is also grounded, from the larger collecting condenser, and then in the next switching position discharges this smaller condenser into the system of precipitator electrodes. At the moment of the discharge of the impulse, complete independence is thereby secured between the discharge circuit and the plant producing the high voltage.

That manner of carrying out our invention is illustrated, by way of example, in Fig. 2 of the drawing. 7 is the lead coming from the high-voltage generator and which conveys the high-voltage current through the rotary spark gap 9, 18 to the precipitator 8. Immediately ahead of spark gap 9, the grounded charging capacitance 10 is provided. In this case, the charging capacitance is made relatively large. Between the two fixed main terminals of the spark gap 9, a rotating cross 18 provided with insulated spherical spark terminals is placed, the terminals being connected successively in pairs. A third, fixed terminal 19 is provided for spark gap 9, which terminal is grounded over the three parallel condensers 20, 21, 22, which may be switched in and out at will. In the shown position of the cross 18, the middle condenser 22, which may in this case be the only one in circuit, is charged by the larger condenser 10, by way of the left hand terminal of gap 9, cross 18 and gap terminal 19. After the cross 18 is turned through 90° in the direction shown by the arrow 23, condenser 21 is discharged into the electrode system of the precipitator 8 by way of the right hand terminal of gap 9. During this discharge, the connections between the actively engaged condensers 20 to 22 and the lead 7 are

completely interrupted. In this manner, a reaction by the precipitator discharge impulse upon the high-voltage-producing plant is prevented with certainty.

In larger electrical precipitating plants, it is advantageous to subdivide the discharge electrodes into several divisions and to apply to these parts successively the said impulse voltages. The discharge electrode is thereby made only of parts, having a relatively low capacitance.

The lower the capacitance at which the impulse voltage is still discharged, the steeper will be the rising part of the curve of each discharge impulse, and correspondingly the more favorable the precipitating effect. To distribute the voltage impulses to the individual divided electrodes, a switching device is advantageously provided which connects the individual electrodes successively with the source of current. The advantages obtainable by the use of voltage impulses of short duration to increase the precipitating effect, may then be applied to large electrical precipitating plants. The number of impulses per second are so chosen as to produce the most favorable precipitating effect. This modification is shown in Fig. 3 in which 8^a, 8^b, 8^c represent the divided electrodes of the precipitator, which are connected to the peripheral contacts of a commutator **26**, whose rotating arm is connected at **25** with the main impulse spark gap **9** when used in the modifications shown in Figs. 1 and 2, so that the spark gap impulses are successively supplied to these individual precipitator electrodes.

We claim as our invention:

1. An arrangement for electrical cleaning of fluids, comprising in combination with an electric cleaning apparatus for said fluid having opposing electrodes, a generator for producing high voltage uni-directional current, a conductor between said generator and the high potential electrode of said cleaning apparatus, a spark gap inserted into said conductor in such manner as to prevent flow of current from said generator to said high potential electrode otherwise than by discharge through said spark gap, and an impulse condenser connected at one terminal to the other electrode of said cleaning apparatus and at the other terminal to said conductor between the spark gap and the generator, for applying sharp electrical impulses through said spark gap to said high potential electrode at intervals, constituting a large multiple of the impulse durations.

2. An arrangement for electrical cleaning of fluids, comprising in combination with an electric cleaning apparatus for said fluid having opposing electrodes, a generator for producing high voltage uni-directional current, a conductor between said generator and the high potential electrode of said cleaning apparatus, a spark gap inserted into said conductor, immediately ahead of the precipitator to reduce the capacitive effect of the intervening conductor portion to a negligible amount, and an impulse condenser connected at one terminal to the other electrode of said cleaning apparatus and at the other terminal to said conductor between the spark gap and the generator, closely adjacent to the spark gap, for applying sharp electrical impulses through said spark gap to said high potential electrode at intervals, constituting a large multiple of the impulse durations.

3. An arrangement for electrical cleaning of fluids, comprising in combination with an electric cleaning apparatus for said fluid, having opposing electrodes, a generator for producing high voltage uni-directional current, a conductor between said generator and the high potential electrode of said cleaning apparatus, a spark gap inserted into said conductor in such manner as to prevent flow of current from said generator to said high potential electrode otherwise than by discharge through said spark gap, and an impulse condenser connected at one terminal to the other electrode of said cleaning apparatus, and at the other terminal to said conductor between the spark gap and the generator, for applying sharp electrical impulses through said spark gap to said high potential electrode at intervals, constituting a large multiple of the impulse durations, and an impedance element, selected from the group including ohmic and inductive resistances, and inserted in said conductor between said condenser connection and said generator for preventing spark gap discharge oscillations from passing into said generator.

4. An arrangement for electrical cleaning of fluids, comprising in combination with a cleaning apparatus for said fluid having opposing electrodes, a generator for producing high voltage uni-directional current, a conductor between said generator and the high potential electrode of said cleaning apparatus, a spark gap inserted into said conductor in such manner as to prevent flow of current from said generator to said high potential electrode otherwise than by discharge through said spark gap, and an impulse condenser connected at one terminal to the other electrode of said cleaning apparatus and at the other terminal to said conductor between the spark gap and the generator, for applying sharp electrical impulses through said spark gap to said high potential electrode at intervals, constituting a large multiple of the impulse durations, and an ohmic resistance and an inductance in said conductor between said condenser connection and said generator for preventing spark gap discharge oscillations from passing into said generator.

5. An arrangement for electrical cleaning of fluids, comprising in combination a generator of high voltage uni-directional current, an electric cleaning apparatus for said fluid, having a plurality of grounded and of high potential oppositely disposed electrodes, a mechanically operating distributor connected to said electrodes and adapted to successively connect said high potential electrodes to a common input terminal, a conductor between said generator and said common terminal, a spark gap inserted into said conductor, closely adjacent to said input terminal, and an impulse condenser grounded at one terminal and connected at the other terminal to said conductor closely adjacent to said spark gap, for applying sharp electrical impulses through said spark gap successively to said several high potential electrodes at intervals constituting a large multiple of the impulse durations.

6. An arrangement for electrical cleaning of fluids, comprising in combination with an electric cleaning apparatus for said fluid having opposing electrodes, a generator for producing high voltage uni-directional current, a conductor between said generator and the high potential electrode of said cleaning apparatus, a spark gap inserted into said conductor in such manner as to prevent flow of current from said generator to said high potential electrode otherwise than by discharge through said spark gap, and an im-

pulse condenser connected at one terminal to the other electrode of said cleaning apparatus, and at the other terminal to said conductor between the spark gap and the generator, a resistor arranged in the line connection between said spark gap and said high potential electrode and an auxiliary spark gap connected in shunt with said resistor and the entire cleaning apparatus, for applying discharge impulses to said high potential electrode, at intervals constituting a large multiple of the impulse durations, said auxiliary spark gap being adjustable for controlling the duration of the discharge impulses.

7. An arrangement for electrical cleaning of fluids, comprising in combination with an electric cleaning apparatus for said fluid having opposing electrodes, a generator for producing high voltage uni-directional current, a conductor between said generator and the high potential electrode of said cleaning apparatus, a spark gap inserted into said conductor in such manner as to prevent flow of current from said generator to said high potential electrode otherwise than by discharge through said spark gap, and an impulse condenser connected at one terminal to the other electrode of said cleaning apparatus and at the other terminal to said conductor between the spark gap and the generator, a resistor arranged in the line connection between said spark gap and said high potential electrode and an auxiliary spark gap connected in shunt with said resistor and the entire cleaning apparatus, for applying discharge impulses to said high potential electrode, at intervals constituting a large multiple of the impulse durations, an auxiliary condenser connected in series with said auxiliary spark gap, and a resistance connected in shunt to said auxiliary condenser for maintaining the desired electric field strength between the apparatus electrodes during the time interval between successive impulses to maintain the cleaning effect.

8. An arrargement for electrical cleaning of fluids, comprising in combination with an electric cleaning apparatus for said fluid having opposing electrodes, a generator for producing high voltage uni-directional current, a conductor between said generator and the high potential electrode of said cleaning apparatus, a spark gap inserted into said conductor in such manner as to prevent flow of current from said generator to said high potential electrode otherwise than by discharge through said spark gap, and an impulse condenser connected at one terminal to the other apparatus electrode and at the other terminal to said conductor between the spark gap and the generator, for producing sharp electrical impulse discharges at intervals constituting a large multiple of the impulse durations, said spark gap having a charge impulse accumulator, and means for transferring the accumulated impulse, produced by the spark gap discharge, to said high potential cleaning apparatus electrode.

9. An arrangement for electrical cleaning of fluids, comprising in combination with an electric cleaning apparatus for said fluid having opposing electrodes, a generator for producing high voltage uni-directional current, a conductor between said generator and the high potential apparatus electrode, a main spark gap inserted into said conductor, and an impulse condenser connected at one terminal to the other apparatus electrode and at the other terminal to said conductor between the main spark gap and the generator, for producing sharp electrical impulse discharges at intervals constituting a large multiple of the impulse durations, said main spark gap having a rotary distributor element between its two electrodes, an auxiliary electrode cooperating with said rotary element and an auxiliary condenser connected between said auxiliary electrode and said other cleaning apparatus electrode, for first charging said auxiliary condenser through an impulse discharge by way of one main gap electrode, the distributor, and the auxiliary electrode, and then discharging said auxiliary condenser by way of said auxiliary electrode, the distributor and the other main gap electrode into the high potential cleaning apparatus electrode, whereby the cleaning apparatus is entirely disconnected from the generator when discharge impulses are applied to its cleaning electrodes.

10. In combination with an apparatus for cleaning treatment of fluids comprising a plurality of sections, a charging circuit comprising means for generating uni-directional high voltage, electrostatic capacity means connected to said generating means and adapted to be charged thereby, spark gap means connected to said generating means and electrostatic capacity means so as to deliver through said spark gap means high voltage impulses on breakdown of the spark gap, and switch means for connecting said spark gap means successively to the sections of the precipitator so as to apply such high voltage impulses successively to said sections.

11. An arrangement for electrical cleaning of fluids comprising, in combination with an electrical fluid-cleaning apparatus having opposing electrodes, a source of electrical energy at high potential, a condenser, and a rotating spark gap device operable to connect said condenser alternately through a spark gap with said source of electrical energy to charge said condenser and through a spark gap to the electrodes of said cleaning apparatus to discharge energy from said condenser through said cleaning apparatus in the form of sharp electrical impulses of high potential.

12. An arrangement for electrical cleaning of fluids comprising, in combination with an electrical fluid-cleaning apparatus having opposing electrodes, a source of electrical energy at high potential, a condenser, means electrically connecting one side of said condenser to one side of said source and to one of the electrodes of said cleaning apparatus, and switching means operable to connect the other side of said condenser alternately to the other side of said source of electrical energy to charge said condenser and to the other electrode of said cleaning apparatus to discharge energy from said condenser through said cleaning apparatus.

RICHARD HEINRICH.
WILHELM FELDMANN.