J. A. & E. S. SMITH. 3 Sheets—Sheet 1.

DOMESTIC SPINNING-WHEEL.

No. 193,562. Patented July 24, 1877.

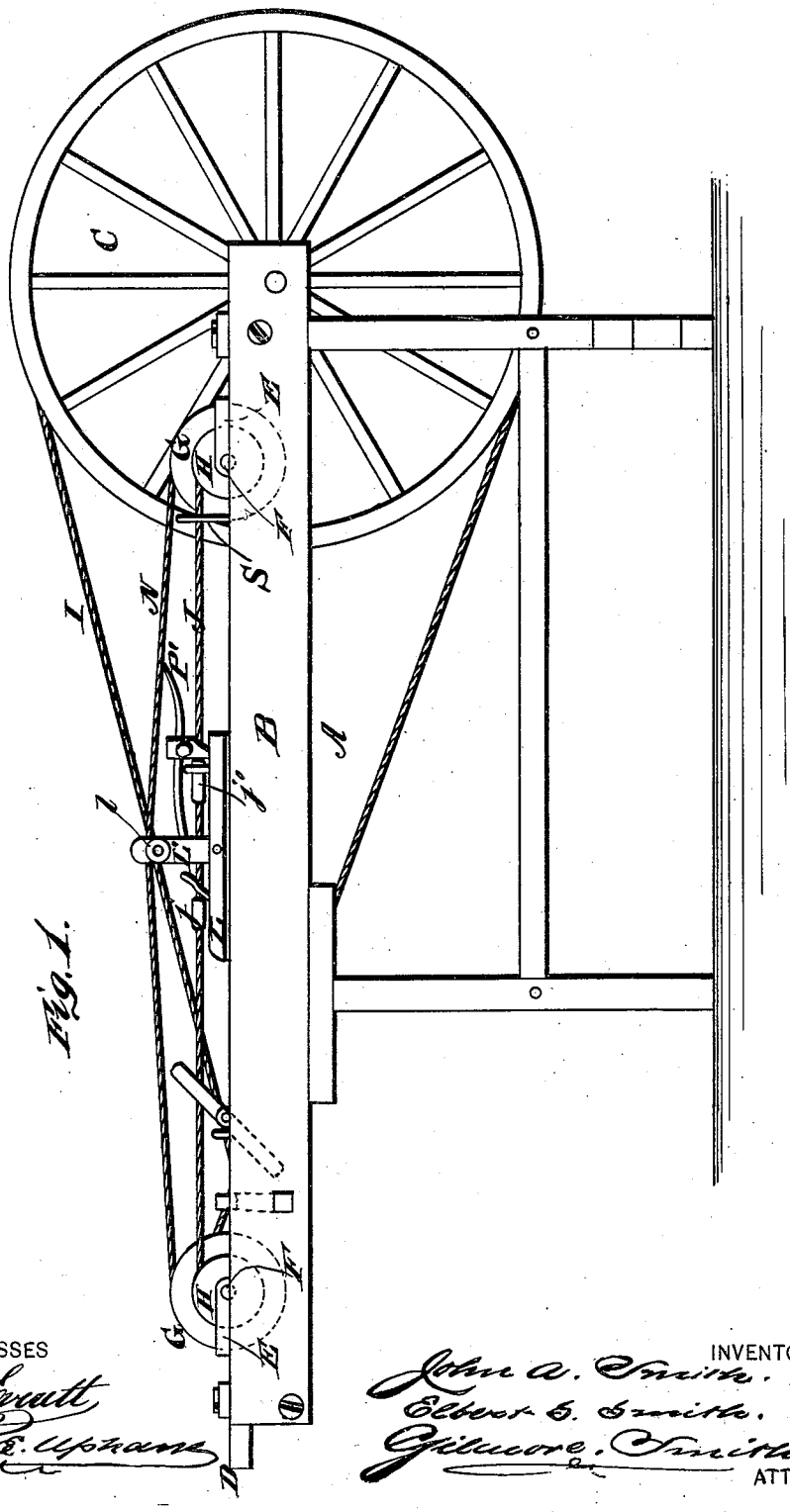

Fig. 1.

WITNESSES

Robt Gravatt

George E. Upham

INVENTORS.

John A. Smith.

Elbert S. Smith.

Gilmore, Smith & Co.

ATTORNEYS.

N. PETERS, PHOTO-LITHOGRAPHER, WASHINGTON, D. C.

3 Sheets—Sheet 2.

J. A. & E. S. SMITH.

DOMESTIC SPINNING-WHEEL.

No. 193,562. Patented July 24, 1877.

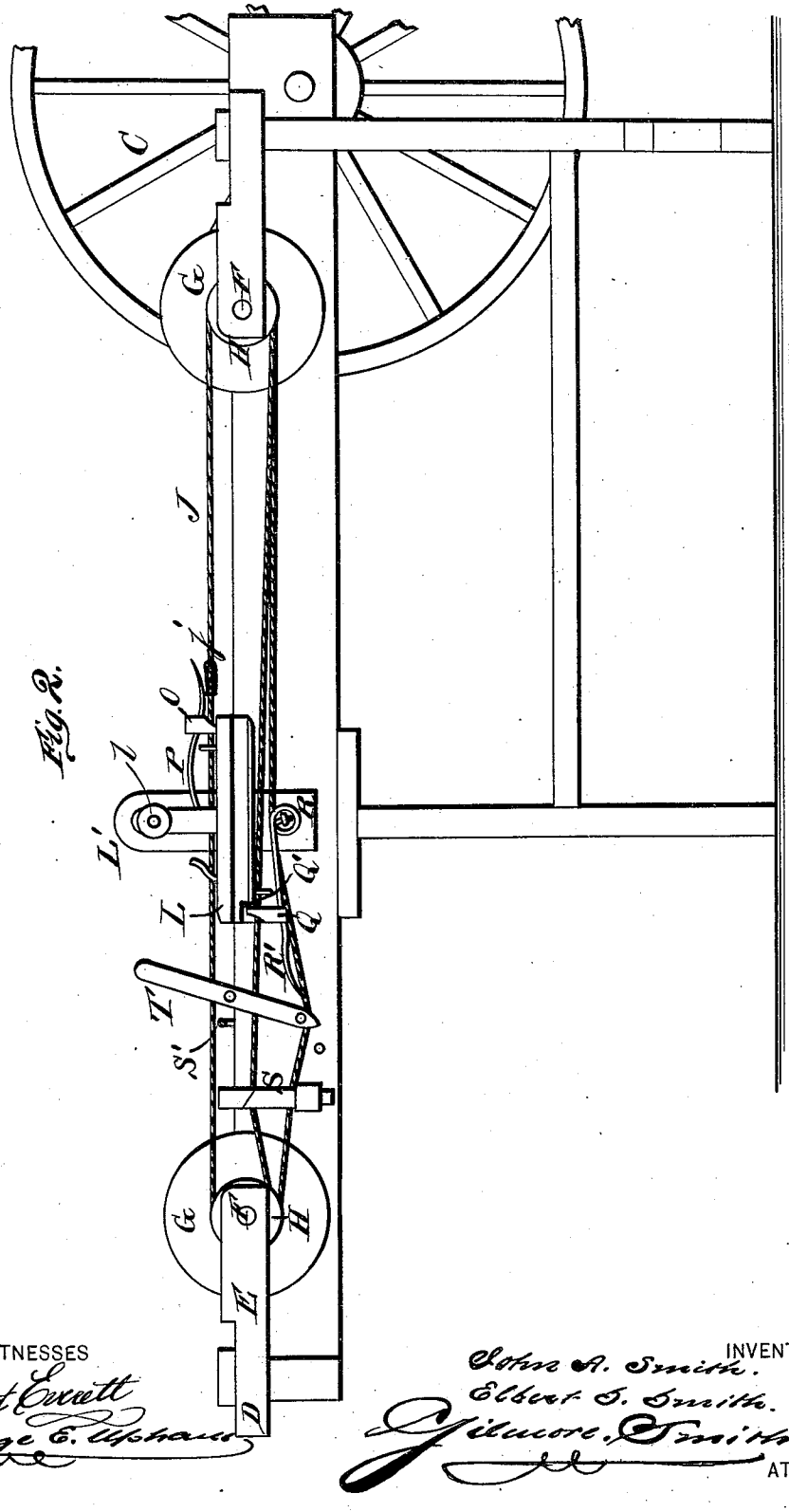

Fig. 2.

WITNESSES

Robert Everett

George E. Upham

INVENTORS.

John A. Smith.

Elbert S. Smith.

Gilmore, Smith & Co.

ATTORNEYS.

N. PETERS, PHOTO-LITHOGRAPHER, WASHINGTON, D. C.

3 Sheets—Sheet 3.

J. A. & E. S. SMITH.

DOMESTIC SPINNING-WHEEL.

No. 193,562. Patented July 24, 1877.

Fig. 2½.

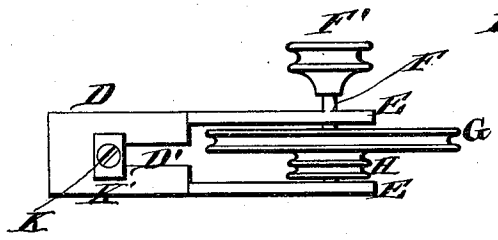

Fig. 3.

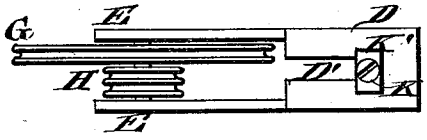

Fig. 4.

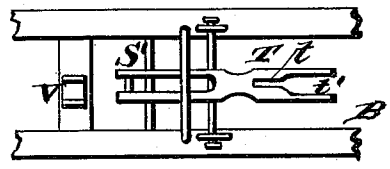

Fig. 5.

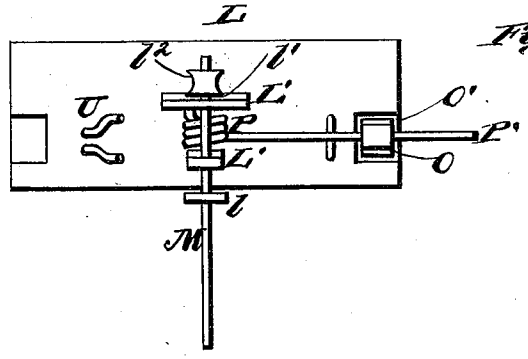

Fig. 6.

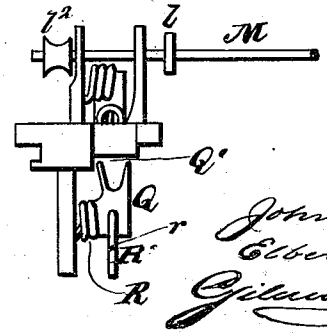

WITNESSES

Robert Everett

George E. Upham

INVENTORS.

John A. Smith.

Elbert S. Smith.

Gilmore, Smith & Co.

ATTORNEYS.

N. PETERS, PHOTO-LITHOGRAPHER, WASHINGTON, D. C.

UNITED STATES PATENT OFFICE.

JOHN ALLEN SMITH AND ELBERT SAWYERS SMITH, OF POND FORK, KY.

IMPROVEMENT IN DOMESTIC SPINNING-WHEELS.

Specification forming part of Letters Patent No. **193,562**, dated July 24, 1877; application filed March 24, 1877.

To all whom it may concern:

Be it known that we, JOHN ALLEN SMITH and ELBERT S. SMITH, of Pond Fork, in the county of Jackson and State of Kentucky, have invented a new and valuable Improvement in Domestic Spinning-Wheels; and we do hereby declare that the following is a full, clear, and exact description of the construction and operation of the same, reference being had to the annexed drawings, making a part of this specification, and to the letters and figures of reference marked thereon.

Figure 1 of the drawings is a representation of a side elevation of our spinning-wheel; and Fig. 2 is a side elevation, with one of the side rails removed, showing the mechanism in position. Figs. 2½, 3, 4, 5, and 6 are detail views thereof.

This invention relates to spinning-wheels and devices in combination therewith; and it consists in the construction and arrangement of certain mechanism for moving the spindle-carriage backward and forward, and for alternately catching and releasing the same, substantially as hereinafter set forth.

In the accompanying drawings, A designates the main frame or bench of my mechanism, which affords a long guideway, B, on one side of one end of which a circumferentially-grooved spinning-wheel, C, is journaled. In each end of said guideway is a slotted block, D, which has two inwardly-extending lips, E, that serve as bearings for a small shaft, F, which is provided with a large grooved pulley, G, and two smaller grooved pulleys, H, each trio of pulleys being connected together so as to turn as one piece. The construction of the above devices is the same at each end of said guideway, except that the farther one of said shafts F from wheel C is provided with another grooved pulley, F′, which receives a band, I, that passes over wheel C, so that said shaft F is turned by the rotation of said wheel C. The four small pulleys H are connected by a single endless band, J, that is crossed on the outer side, near the farther end, and is provided with knots or enlargements *j j′*. The slots D′ in said blocks D allow them to be moved outward, so as to tighten band J, after which said blocks are clamped in fixed pieces in the end of guideway B by means of screws K and small blocks K′.

L designates a spindle-carriage running in said guideway B, and provided with two small standards, L′ L′, in which a spindle, M, is journaled. Said spindle is provided on the outside of said standards with collars *l l¹*, which keep it in place, collar *l¹* being made in one piece with a small pulley, *l²*. An endless band or cord, N, passes aronnd said small pulley *l²*, and also over the two large pulleys G. The traveling of this band rotates said spindle so as to twist the thread, and also moves said carriage and spindle in said guideway toward the operator.

O designates a fork or bifurcated block, which is pressed down into a recess, O′, in the top of said carriage, at the nearer end thereof, by a spring, P; and Q designates a similar fork or bifurcated block, which is pressed up into a recess, Q′, at the bottom of the farther end thereof, by a spring, R. Band or cord J passes over said carriage under fork O, and under said carriage over fork Q. Another line or thickness of said band or cord J runs over and under said carriage by the side of said forks or bifurcated blocks. Said forks will allow said cord or band to pass through them; but the knots or enlargements *j j′* will not thus pass either fork until the bearing end of spring P or R is forced away from said carriage, so as to increase the opening between the forked block pressed by said spring and the carriage. This is automatically effected at the nearer end of the guideway B by means of a fixed arched bar, S, which engages with an upwardly-inclined extension, P′, of spring P, and at the farther end by a fixed cross-bar, S′, which engages with the downwardly bent or inclined extension R′ of spring R. Said extension R′ has a catch, *r*, formed in its upper side, which springs behind said cross-bar S, and locks said carriage for a time at the farther end of its course. Said carriage is released by a bifurcated tripping-lever, T, which is pivoted on the top of guideway B, and adapted to trip, by its lower end, catch *r* by depressing extension R′. This action takes place when said tripping-lever is raised into a vertical posi-

tion, it being ordinarily inclined toward spinning-wheel C. This is effected when one of said knots *j'* is drawn backward against the bifurcated upper end of said tripping-lever; but when said cord J travels in its usual direction said knots ride up over the narrow part *t* of the cleft in the upper part of said tripping-lever, and pass freely through the broader upper part *t'* of said cleft or slot. On the top of said carriage is a small forked catch, U, which is inclined toward said spinning-wheel, so that said knots may pass freely in their usual direction, but will engage with said catch and move said slide when traveling in the opposite direction. V is a small forked upright, which supports a part of cord J at the point where the latter is crossed.

The operation of this machine is as follows: The carriage L being in its nearest position to the operator, wheel C is turned to the right until the knot *j* on band J (said knot being in front of knot *j'* in the direction of their usual motion) engages with lower fork or block Q, and carries said carriage toward the farther end of guideway B. When extension R' comes into contact with cross-bar S' it is forced downward, carrying block or fork Q down with it and releasing knot *j*. Knots *j* and *j'* then pass freely through said fork Q without moving said carriage, and up over one of said small pulleys H. As said band travels the knots pass freely through forked tripping-lever T and forked catch U; but when said knot *j* reaches upper bifurcated block or fork O it cannot pass. The other knot, *j'*, is now barely through said bifurcated tripping-lever, and said carriage is held, as stated, by catch *r* and cross-bar S'. The wheel C is then slightly turned in a reverse direction, and the reversed movement of said band causes said knot *j'* to raise said tripping-lever into a vertical position, thereby freeing said carriage. By turning said wheel in the usual direction said carriage is then carried by band N toward the nearer end of said guideway B, and it does not stop until after arched bar S has raised extension P' and block or fork O, so that knots *j j'* may continue their movement unimpeded.

The doubling of the small pulley H and the band or cord J allows the knots *j j'* to make one entire journey from end to end of the guideway without moving the carriage L, so that spindle M is rotated for a time without being moved otherwise. This rotation twists the thread suitably. Catch U, by engaging with knot *j'*, prevents band or cord J from being made to travel too far backward in reversing its motion for the purpose of freeing said carriage, as described.

What we claim as new, and desire to secure by Letters Patent, is—

1. The combination of a sliding spindle-carriage with cords or bands, which draw said carriage toward the operator, and also rotate said spindle, substantially as and for the purpose set forth.

2. The combination of a sliding spindle-carriage with an endless traveling band extending from end to end of the guideway, and provided with knots for moving said carriage and pulleys at each end, substantially as and for the purpose set forth.

3. The combination of a sliding spindle-carriage, having a spring-pressed fork at each end, with a knotted traveling cord or band and devices, substantially as described, at the ends of the guideway, for forcing said forks away from said carriage, substantially as and for the purpose set forth.

4. The combination of bifurcated tripping-lever T, having cleft *t t'*, with band or cord J, having knots *j j'*, cross-bar S', and carriage L, with extension R', having catch *r*, substantially as and for the purpose set forth.

5. The combination of slotted lever T, knotted cord J, cross-bar S', extension R', spring R, fork Q, and carriage L, substantially as and for the purpose set forth.

6. The combination of spindle-carriage L, provided with inclined bifurcated catch U, and cord or band J, having knots or enlargements *j j'*, substantially as and for the purpose set forth.

7. The combination of arched bar S with inclined extension P', spring P, and fork or bifurcated block O, supported by carriage L, substantially as and for the purpose set forth.

In testimony that we claim the above we have hereunto subscribed our names in the presence of two witnesses.

JOHN ALLEN SMITH.
ELBERT SAWYERS SMITH.

Witnesses:
GEORGE W. MOORE,
GILBERT REYNOLDS.