Oct. 24, 1967 R. F. HIRSCH 3,348,789

SECURITY BELTS

Filed Sept. 1, 1966 2 Sheets-Sheet 1

FIG. 1

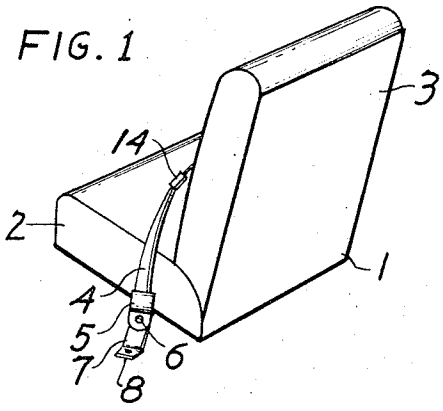


FIG. 4

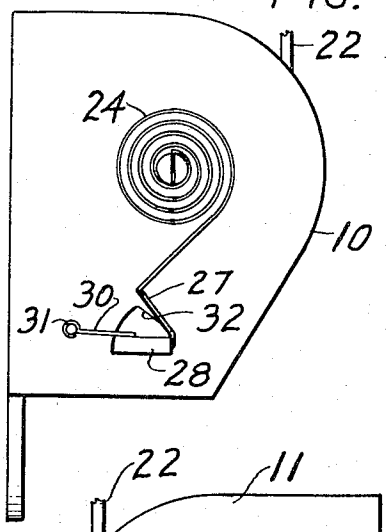


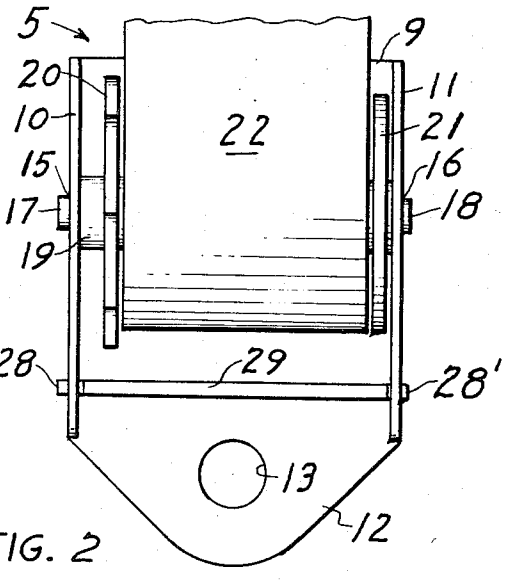


FIG. 2

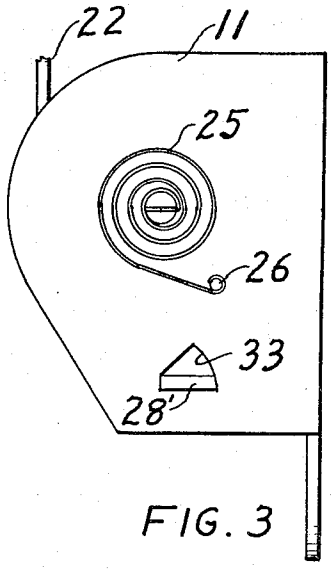


FIG. 3

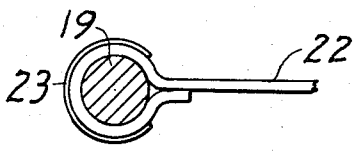


FIG. 6

RICHARD F. HIRSCH
INVENTOR.

BY Earl E. Moore
ATTY.

Oct. 24, 1967 R. F. HIRSCH 3,348,789

SECURITY BELTS

Filed Sept. 1, 1966 2 Sheets-Sheet 2

FIG. 5

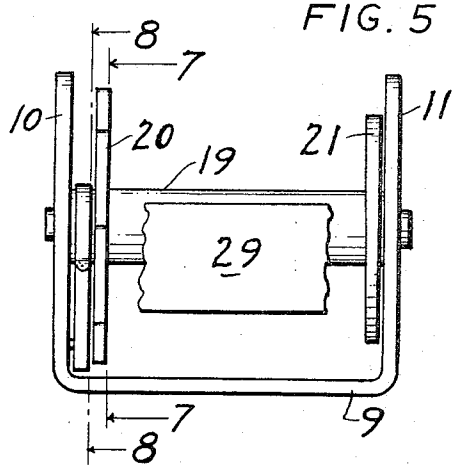


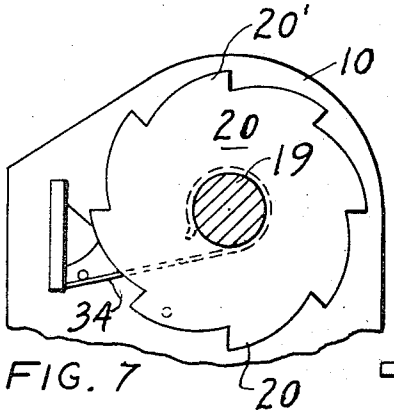


FIG. 7

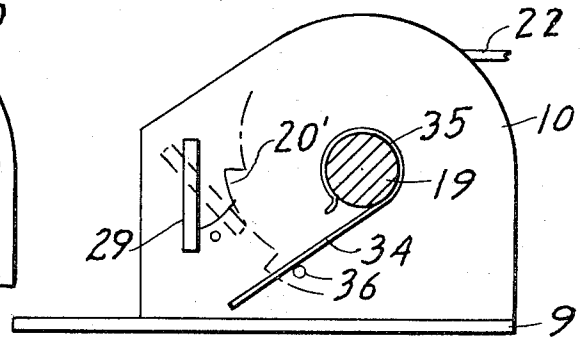


FIG. 8

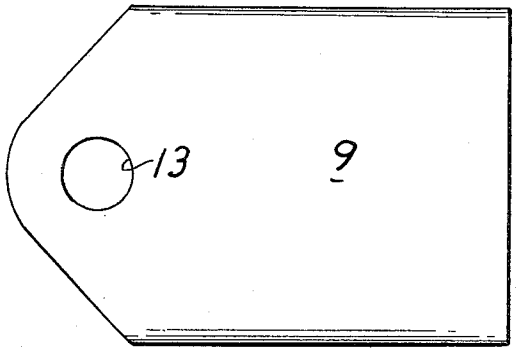


FIG. 9

RICARD F. HIRSCH
INVENTOR.

BY Earl C. Moore
ATTY.

United States Patent Office 3,348,789 Patented Oct. 24, 1967



3,348,789

# SECURITY BELTS

Richard F. Hirsch, 3142 Prospect, La Crescenta, Calif. 91014

Filed Sept. 1, 1966, Ser. No. 576,688
7 Claims. (Cl. 242—107.4)

This invention is concerned with seats and chairs and the like with means to safely secure passengers therein. Therefore, the invention relates to a belt and/or band-like means which may also be termed a restraining device adapted to hold a passenger to his or her seat or chair in land and air craft which is subject to shocks or rapid deceleration as well as lateral thrusts.

One of the principal objects of the invention is to snugly secure a person to a chair or seat by latchable belt means and which belt means is easy to adjust and latch. The belt means is so arranged and provided that it can be readily extended and retracted, but when once set or positioned, the belt means will positively hold the person secured to the chair or seat without any loose play of the belt means.

Another object is to present a safety belt means that automatically adjusts itself as to snugness about the body and in a manner that it is constantly urged toward complete retraction and also checked toward expansion while about the body, but when fully released, the belt is promptly returned to a coiled condition. The slack of the belt is automatically taken up while being worn to avoid looseness thereof, but not in a manner to make the wearer of the belt to feel uncomfortable.

Another object is to provide an inexpensive belt-like means that is simple in construction but yet of great strength to withstand service for the purposes intended, for instance, for use upon the seats of airplanes, busses, automobiles, amusement device and even water craft.

In the drawings:

FIG. 1 is a perspective view of a seat means which may be found in various air and land craft and which seat is provided with the device of this invention;

FIG. 2 is an enlarged plan view of the device or mechanism designed to be anchored to the floor of a land or air craft and which device accommodates the shiftable belt, parts being removed and the belt broken away;

FIG. 3 is a side elevational view of that shown in FIG. 2, but shows a coiled spring attached;

FIG. 4 is a view similar to that of FIG. 3 but showing the opposite side of the device in elevation and with a coiled spring attached;

FIG. 5 is an elevational view of the device with parts broken away;

FIG. 6 is a sectional view of a detail with parts in elevational view;

FIG. 7 is a view taken substantially along the line 7—7 of FIG. 5 and showing parts broken away;

FIG. 8 is a view taken along the line 8—8 of FIG. 5;

FIG. 9 is a plan view taken on the opposite side of that shown in FIG. 2.

As shown in FIG. 1, a chair or seat means 1 is displayed having the usual upholstered seat portion 2 and the usual upholstered adjustable or nonadjustable back portion 3. A complementary belt means 4 is shown in position relative to the chair when in use and having one end thereof attached to the device 5, to be explained in detail later, and which device 5 is provided with means to accommodate a bolt 6 that pivots the device to a bracket means 7 of any suitable style and type. The bracket means is provided with a flange portion 8 that is to be securely fixed to the floor of the air or land craft, or to a specially arranged structural part of the craft.

The other side of the chair may have another of said devices like that of 5 or just a short belt having its lower



end secured to the floor of the craft. The two parts of the belt are joined together by the passenger through the connecting buckle means or latch indicated in general at 14. Obviously, any kind or type of fastener may be employed for the purposes intended.

The device 5, as shown enlarged in FIGS. 2–9, has a base or main support structural means comprising the plate 9 provided with integral upstanding flange or wall portions 10 and 11. An extension of 9 has the integral portion 12 which is rounded and provided with a bore 13 to accommodate the mentioned bolt 6. By pivoting this device 5 to the bracket means 7, the belt can be better adjusted about the waist of the passenger to avoid twisting.

The walls 10 and 11 have bores or bearing openings 15 and 16, respectively, which accommodate the reduced bearing portions 17 and 18, respectively, of the shaft means 19. One end portion of this shaft has the toothed wheel 20 provided with the plurality of teeth 20' and the wheel is firmly fixed to the shaft as by welding or brazing. The other end of this shaft has firmly fixed thereto the disc-like wheel member 21 as by welding, etc. The disc member 21 and toothed wheel 20 along with a portion of the shaft form a spool or reel means that is sized to accommodate an elongated belt means 22. The inner end of the belt 22 is looped about the shaft 19, as shown in FIG. 6, and this looped portion is secured to the shaft in any suitable manner as by the use of an adhesive. In any event, however, the belt end may be covered by a spring clip means as indicated at 23.

The shaft reduced portions 17 and 18 are provided with spring members indicated at 24 and 25, the inner ends of each spring is fixed in a cross groove of the shaft end, as shown. The other end of spring 25 is fixed to a post 26 that is fixed to the wall 11. The other end of spring 24 is fixed to one end of a coupler element 27 that is shaped, as shown, and has its other end fixed to the bottom portion of a reduced extension 28 of a cross positioned locking bar member 29, see FIGS. 2 and 4. A ribbon spring 30, having one end fixed to the post 31 which is fixed to the wall 10, has its free end bearing against the extension 28 so as to bias same with respect to the action of springs 24 and 25. The balance is such, that the lock bar 29 stays in the position shown in FIGS. 2, 4 and 8 until the springs 24 and 25 are wound tight enough upon the shaft end 17 and 18 to overcome the strength of the spring 30. When this happens, the belt has been pulled well out of the device 5. This overcoming action causes the locking bar 29 to assume the position shown in dotted lines in FIG. 8, and this allows the bar to engage one of the teeth 20' on the toothed wheel. Therefore, when the person girded with the belt means latches the buckle 14 and lets go thereof, the spool turns to make the belt snug to one's body. This wheel 20 is always free to turn each time the belt becomes loose (for instance when the wearer draws in his stomach) but cannot turn in the opposite direction because of the bar 29 engaging the teeth on the wheel 20. Therefore, the spool or reel can always be rotated so as to wind the belt thereon, but not to extend the belt except for the first pull-out or feed-out when the belt is first adjusted to the body. The two reduced portions 28 and 28' of the locking bar 29 are allowed to turn in the side wall predesigned cuts or openings 32 and 33 of the walls 10 and 11, respectively.

When the spool is rewinding the belt 22, the spring arm 34 will be positioned against pin 36. The locking bar will lightly rub against toothed wheel 20 until the ribbon spring 30 overbalances spring 24 which is becoming more relaxed as the rewind continues. The locking bar will then assume the position as shown in FIG. 8 (solid lines). This would be the end of a wearing cycle.

The start of the wearing cycle would be when the wearer pulls the belt out so as to secure the fastening means 14.

When this action occurs, spring arm **34** moves with shaft **19** into the position as shown in FIG. 7 and with only a few degrees of rotation of shaft **19**. This now prevents locking bar **29** from engaging toothed wheel **20** and will do so as long as the belt is being pulled from the reel or spool. Once the belt has been pulled out sufficiently far as to engage fastening means **14**, then the wearer releases the fastening means **14**. The reel which is biased so as to always rewind any belt slack then does just this as the fastener is released. This action causes spring arm **34** to move to pin **36** and the unbalanced spring **30** can no longer hold locking bar **29** from contacting toothed wheel **20** and when the lock bar engages the tooth wheel the belt is prevented from further unwinding from the reel. Thus the belt is kept snug to the body of the wearer for the belt is maintained free to wind on the reel but not to unwind.

Certain novel features, ideas, and details of this invention are disclosed herein, and in some cases in considerable detail, in order to make the invention clear in at least one form thereof. However, it is to be clearly understood and realized that the invention, as disclosed, is not necessarily limited to the exact form and details disclosed since it is apparent that various modifications and changes may be made without departing from the spirit and scope thereof.

Having thus described my invention, what is claimed as new and desired to be secured by Letters Patent is:

**1.** A safety unit for seats, chairs and the like, the unit comprising in combination a shiftable belt and a device to accommodate the belt; the device having a support means accommodating a roller to which one end of the belt is attached and upon which the belt is wound, a toothed wheel fixed to the roller to rotate therewith, latch means to prevent the wheel and the roller from unwinding, a main spring means having an end portion thereof attached to the roller and another end portion attached to the latch means, the main spring means constantly urging the roller to wind the belt thereon, a spring arm means engaging a portion of



the roller and having a leg engaging the latch means to prevent its operation when the roller is first rotated to extend the belt, when the main spring means is wound to a predetermined strength and the belt retracted a short distance to release the leg from the latch means, said another end portion of the main spring then acting to shift the latch means and thus free it for its engagement with the toothed wheel so that the roller is prevented from unwinding but left free to wind the belt thereon.

**2.** The unit recited in claim **1** wherein the support means is a plate having upstanding parallel flanges spaced apart to accommodate the mentioned operating parts.

**3.** The unit recited in claim **1** wherein a co-axial flange is fixed to the roller to rotate therewith and which flange is spaced from the toothed wheel to provide space for the major portion of the belt when wound on the roller.

**4.** The unit recited in claim **1** wherein the main spring means consists of two spiral springs with one thereof on each end of the roller but one of the spiral springs having one end fixed to the roller and the other end fixed to the support means.

**5.** The unit recited in claim **1** wherein the latch means is a bar journalled to the support means in a manner to have a limited swing to and from the toothed wheel for engagement with the teeth thereof.

**6.** The unit recited in claim **1** wherein the spring arm is frictionally attached to the roller.

**7.** The unit recited in claim **1** wherein a biasing spring is attached to the support means and bears against a portion of the latch means in opposition to the said another end portion spring so as to keep the latch free of the toothed wheel when not overcome by the strength of the portion of the main spring which is attached to the latch.

**References Cited**

UNITED STATES PATENTS

3,174,704 3/1965 Replogle ---------- 242—107.4

WILLIAM S. BURDEN, *Primary Examiner.*