PCT WORLD INTELLECTUAL PROPERTY ORGANIZATION
International Bureau

INTERNATIONAL APPLICATION PUBLISHED UNDER THE PATENT COOPERATION TREATY (PCT)

(51) International Patent Classification 6 :
G01H 11/06, H03F 3/45, 3/04

A2

(11) International Publication Number: **WO 95/05584**

(43) International Publication Date: 23 February 1995 (23.02.95)

(21) International Application Number: PCT/US94/09098

(22) International Filing Date: 9 August 1994 (09.08.94)

(30) Priority Data:
08/105,873 11 August 1993 (11.08.93) US

(60) Parent Application or Grant
(63) Related by Continuation
US 08/105,873 (CIP)
Filed on 11 August 1993 (11.08.93)

(71) Applicant *(for all designated States except US)*: BENTLY NEVADA CORPORATION [US/US]; 1617 Water Street, Minden, NV 89423 (US).

(71)(72) Applicants and Inventors: LI, Don [US/US]; 7651 Airport Boulevard, Houston, TX 77065 (US). CAMPBELL, Lam [US/US]; 7651 Airport Boulevard, Houston, TX 77065 (US). BUSCH, Todd [US/US]; 7651 Airport Boulevard, Houston, TX 77065 (US).

(74) Agent: KRETEN, Bernhard; Bloom & Kreten, Suite 245, 77 Cadillac Drive, Sacramento, CA 95825 (US).

(81) Designated States: AM, AT, AU, BB, BG, BR, BY, CA, CH, CN, CZ, DE, DK, ES, FI, GB, HU, JP, KP, KR, KZ, LK, LT, LU, LV, MG, MN, MW, NL, NO, NZ, PL, PT, RO, RU, SD, SE, SK, UA, US, UZ, VN, European patent (AT, BE, CH, DE, DK, ES, FR, GB, GR, IE, IT, LU, MC, NL, PT, SE), OAPI patent (BF, BJ, CF, CG, CI, CM, GA, GN, ML, MR, NE, SN, TD, TG).

Published
Without international search report and to be republished upon receipt of that report.

(54) Title: TWO-WIRE CONSTANT CURRENT POWERED TRANSDUCER

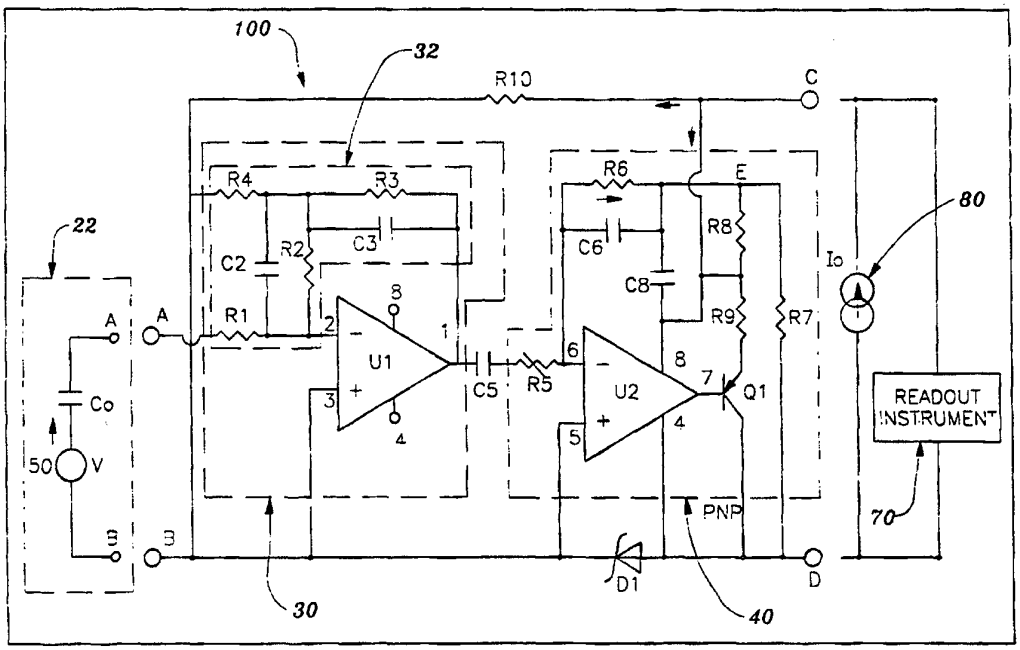

(57) Abstract

A two-wire constant current powered transducer (10) for detecting, integrating and transmitting an acceleration signal (50) received from a piezoelectric crystal (12). The crystal is operatively coupled to rotating machinery (M) such that rotating anomalies correlative of wear or potential failure can be detected early enough for preventative maintenance. The transducer (10) includes two stages (30, 40). The first stage (30) is an integrator which integrates the acceleration to velocity. The second stage (40) is a gain stage. The gain stage operates with a PNP transistor emitter follower to control the output DC bias level and route the integrated acceleration signal back to the control system.

FOR THE PURPOSES OF INFORMATION ONLY

Codes used to identify States party to the PCT on the front pages of pamphlets publishing international applications under the PCT.

AT	Austria	**GB**	United Kingdom	**MR**	Mauritania
AU	Australia	**GE**	Georgia	**MW**	Malawi
BB	Barbados	**GN**	Guinea	**NE**	Niger
BE	Belgium	**GR**	Greece	**NL**	Netherlands
BF	Burkina Faso	**HU**	Hungary	**NO**	Norway
BG	Bulgaria	**IE**	Ireland	**NZ**	New Zealand
BJ	Benin	**IT**	Italy	**PL**	Poland
BR	Brazil	**JP**	Japan	**PT**	Portugal
BY	Belarus	**KE**	Kenya	**RO**	Romania
CA	Canada	**KG**	Kyrgystan	**RU**	Russian Federation
CF	Central African Republic	**KP**	Democratic People's Republic of Korea	**SD**	Sudan
CG	Congo			**SE**	Sweden
CH	Switzerland	**KR**	Republic of Korea	**SI**	Slovenia
CI	Côte d'Ivoire	**KZ**	Kazakhstan	**SK**	Slovakia
CM	Cameroon	**LI**	Liechtenstein	**SN**	Senegal
CN	China	**LK**	Sri Lanka	**TD**	Chad
CS	Czechoslovakia	**LU**	Luxembourg	**TG**	Togo
CZ	Czech Republic	**LV**	Latvia	**TJ**	Tajikistan
DE	Germany	**MC**	Monaco	**TT**	Trinidad and Tobago
DK	Denmark	**MD**	Republic of Moldova	**UA**	Ukraine
ES	Spain	**MG**	Madagascar	**US**	United States of America
FI	Finland	**ML**	Mali	**UZ**	Uzbekistan
FR	France	**MN**	Mongolia	**VN**	Viet Nam
GA	Gabon				

TWO-WIRE CONSTANT CURRENT POWERED TRANSDUCER

Technical Field

This invention relates to a two-wire piezoelectric crystal velocity transducer that is designed to process a cyclic voltage acceleration signal and to output an integrated velocity response. More specifically this invention relates in general to monitoring a bearing housing or casing for structural vibration related to rotating and reciprocating machinery by the use of transducers in order to diagnose the overall condition of the machine which is correlative to maintenance.

Background Art

Two-wire constant current powered transducers are presently using individual Field-Effect transistors (FETs) and Bipolar Junction transistors (BJTs) to process data. These circuits are heavily dependent on the characteristics of the active components, which usually have a wide range of component tolerance, such as gain, bias voltage, bias current and temperature coefficient.

Accordingly, each production unit has to be initially calibrated to incorporate those tolerances. Moreover, the optimal operating point drifts widely as a function of both temperature and age. The bandwidth is narrow (because of not having enough gain). The design is thus difficult and the labor and parts cost are high.

The following prior art reflects the state of the art of which applicant is aware and is included herewith to discharge applicant's acknowledged duty to disclose relevant prior art. It is stipulated, however, that none of these references teach singly nor render obvious when considered in any conceivable combination the nexus of the instant invention as disclosed in greater detail hereinafter and as particularly claimed.

INVENTOR	ISSUE DATE	PATENT NUMBER
Bruckenstein et al.	November 4, 1975	3,918,005
Barr	December 11, 1979	4,178,525
Peters	March 1, 1988	4,727,752
Park et al.	February 28, 1989	4,807,482
Alexander	March 17,1992	5,097,223
Verheyen et al.	July 14, 1992	5,130,598

U.S. Patent No. 3,918,005 to Bruckenstein, et al. teaches the use of op-amp circuitry with automatic self-biasing wherein either a controlled current or voltage is provided at the load impedance Z connected across the inverting input and the second op-amp A2.

U.S. Patent No. 4,178,525 to Barr teaches the use of a two-wire piezoelectric acceleration transmitter for detecting and transmitting peak amplitudes of cyclic voltage developed by transducer 32 responsive to vibration.

U.S. Patent No. 4,727,752 to Peters discloses an oscillator drive system for a piezoelectric crystal 20 whose output corresponds to a nearly sinusoidal resonator 12 signal and is illustrated as being used in an accelerometer. Peters discloses the application of driving the crystal with a digital signal where the oscillator is shown fig. 4. Alternative embodiments are disclosed.

U.S. Patent No. 4,807,482 to Park et al. discloses a method for measuring stimuli applied to a piezoelectric transmitter. Two embodiments are disclosed.

U.S. Patent No. 5,097,223 to Alexander teaches the use of a current feedback audio power amplifier utilizing a pair of op-amps A1 and A2 wherein A1 is a buffer amplifier used for audio gain and A2 is used for sub-audio gain. The output of A1 is connected in a voltage gain feedback circuit back to its inverting input and a voltage gain feedback loop is connected across A2. A current limiting circuit can be provided if desired to limit the current in the output stage.

U.S Patent No. 5,130,598 to Verheyen et al. discloses apparatus for driving a piezoelectric actuator for a fuel injector.

OTHER PRIOR ART

Industrial Monitoring Instrumentation a division of PCB Piezotronics Inc.; Machinery Vibration Measurement & Monitoring Instrumentation; 1992.

Columbia Research Labs, Inc. a Piezoelectric Products Division; 1985.

Imo Industries Inc., CEC Instruments Division, Pressure and motion transducers for high performance industrial and mil/aerospace applications, Short form catalog

Kistler Instrument Corp., Measure Acceleration, Shock and Vibration.

Metrix Instrument Co.,1991/1992 Catalog. Pages 6-9,14-23.

PCB Piezotronics Inc. Low impedance quartz accelerometers series 300.

SKF, Condition Monitoring Catalog, 1991, pages B-38 to B-45.

Vibra•Metrics, Accelerometer Selector guide, September 1, 1989 bulletin VM142.

Vibro-Meter Corp., 400 Series Charge-Coupled Accelerometers, pages 2-1-7.

Wilcoxon Research, Industrial Vibration Sensors.

Wilcoxon Research, Short form Catalog of Vibration Instrumentation, March 1991, pages 1- 12.

The other prior art listed above, but not specifically discussed, further chronicle the prior art of which the applicant is aware.

Disclosure of Invention

The present invention comprises a two-wire transducer for measuring machine vibration. This vibration is received by an sensor which includes a piezoelectric crystal for transforming the received acceleration signal into a signal whose frequency is equal to the frequency of vibration and whose amplitude is proportional to the acceleration of vibration. The transformed signal is received by and integrated into a velocity signal by a first stage of a two stage circuit contained in a constant current powered signal conditioning circuit.

The sensor, in combination with the first stage, operate at a bias above circuit ground. This elevated bias is the result of a constant current source biasing a zener diode to provide a constant reference voltage.

The second stage comprises a second op-amp configured as a high gain amplifier with a means for calibration of the overall sensitivity of the transducer. The output of the second op-amp is directly coupled to a base of a PNP transistor which is configured as an emitter follower and functions as a signal output driver and a current compensator.

The velocity signal output of the first stage referenced to the elevated bias is capacitively coupled, to eliminate the DC component passed by the first stage, to the second stage amplifier wherein the second stage amplifies and outputs a voltage signal in accordance with the velocity signal input.

The constant current powered signal conditioning circuit further provides a stable DC voltage biasing of the output signal, the constant current source and the power terminals of the op-amps.

Brief Description of Drawings

Figure 1 is an elevational view of the transducer device of this invention in place on a machine for monitoring of the vibration thereof.

Figure 2 is a sectional view taken along line 1A-1A of figure 1 with portions of the machine and the transducer cut away to reveal interior details thereof.

Figure 3 is a schematic view of a circuit utilized for conditioning of a signal within the transducer.

Figure 4 is a schematic view of an alternative embodiment of that which is shown in figure 3.

Figure 5 is a schematic view of a second alternative embodimentof that which is shown in figure 3.

Figure 6 is a schematic view of a third alternative embodimentof that which is shown in figure 3.

Best Mode(s) For Carrying Out The Invention

Before delineating the description of the operation of the two-wire constant current powered transducer some basic introductory material is provided to simplify the circuit description and analysis.

First, the variable and double-subscript notation that is utilized in the voltage description of an AC signal, a DC signal and the combination of the two is as follows: AC signals use lower case letters for the variable and double-subscript notation (e.g. v_{cd}), DC signals use upper case letters for the variable and double-subscript notation (e.g. V_{CD}) and the superimposed AC and DC signals use lower case letters for the variable and upper case letters for the double-subscript notation (e.g. v_{CD}).

Second, note that "operational amplifier" (abbreviated op-amp) refers to a direct-coupled high gain amplifier to which feedback is added to control its overall response characteristic. A typical op-amp has five basic terminals: two for supply power, two for input signals (which are labeled with a negative (-) sign and positive (+) sign), and one for the output. The input terminal marked with a negative sign is referred to as the inverting input because it produces an output signal that is inverted or 180 degrees out of phase with the input signal. The input terminal marked with a positive sign is referred to as the noninverting input because it produces an output that is not inverted or "phase preserved". As an aid in circuit analysis, the "ideal" characteristics of an op-amp are used. This is practical because the "ideal" characteristics of the op-amp closely approximate that of real op-amp characteristics. A summary of the ideal characteristics of the op-amp that are applied for simplification of circuit analysis are as follows:

1. The input impedance of the inverting and noninverting terminals is infinitely large; thus, the input current to the op-amp is zero.
2. The voltage (v_{+-}) between the inverting and noninverting terminals is zero. This is described by saying that the input terminals "stick" together.
3. The open loop voltage gain is infinite.
4. Output impedance is zero; consequently, output voltage is independent of load.
5. The bandwidth is infinite.
6. The op-amp characteristics do not drift with temperature.

These and other characteristics of the op-amp can be found in Micro-Electronics Digital and Analog Circuits and Systems by Jacob Millman, McGraw-Hill Book Company, 1979 at pages 523 through 525.

In conclusion of the basic introductory material it should be noted that in critical applications of low-level inputs and high gain, the power supply

requirements are extremely stringent. Voltage changes or noise on the power-supply lines can be coupled into an op-amp and appear as equivalent input signals. Manufacturers take this into account in the design of op-amps by minimizing these effects. The ability of an op-amp to reject voltage changes or power-supply-induced noise and drift on the power supply lines is called the power-supply rejection ratio (PSRR). Stated another way, the (PSRR) is the ratio of the change in input offset voltage to the change in power-supply voltage producing it. Ratings may be given for each power supply separately or together, giving a typical value and a maximum limit. The unit of measure may be μV/V or decibels (dB).

Referring to the drawings, figure 1 shows an elevational view of the two-wire constant current powered transducer 10 coupled to a vibrating machine M for monitoring the acceleration of vibration thereof.

Referring to figure 2, reveals a sectional view of the two-wire constant current powered transducer 10 for monitoring acceleration of vibration and for outputting an acceleration signal of amplitude proportional thereto. The two-wire constant current powered transducer 10 utilizes a piezoelectric crystal 12 situated between an sensor base 14 and an inertial reference mass IM as a sensor 20 of acceleration. When the two-wire constant current powered transducer 10 is coupled to the machine M, the vibration of machine M causes a compression or tension force "V" to act on the piezoelectric crystal 12. The piezoelectric crystal 12, in turn, acts as a precision spring to oppose compression or tension force thereby generating an electric charge. Thus, an output directly proportional to amplitude of acceleration is produced at terminals A and B of the sensor 20.

Figure 3 illustrates the equivalent circuit 22 of the sensor 20 (shown in figure 2). The output terminals A and B of the equivalent circuit 22 are the same terminals A and B of the sensor 20 (shown in figure 2). These terminals are coupled to nodes A and B of the constant current powered signal conditioning (CCPSC) circuit 100 which includes a first stage 30 and a second stage 40.

The equivalent circuit 22 can be treated as a voltage source whose input signal 50 (i.e. to the CCPSC circuit 100) has a frequency equal to the vibration frequency of the machine M and whose amplitude is proportional to the magnitude of acceleration. This voltage source is in series with an equivalent capacitor CO. The capacitance is determined by the effective area of the parallel plated conductive material (usually metal) on the piezoelectric crystal 12 (figure 2) and the dielectric constant of the piezoelectric crystal 12 (figure 2). This equivalent circuit 22 is used in the design of the first stage 30.

The acceleration signal 50 is received by op-amp U_1 through the equivalent crystal capacitor C_0 and input resistor R_1. Resistor R_1 determines the input impedance of the constant current powered signal conditioning (CCPSC) circuit 100.

This RC network (R_1 and C_0) acts as a high pass filter (typically -3db around 10 to 20 Hz for the reference values listed below). To make a low frequency velocity transducer, this invention applies compensation.

Figure 3 further illustrates the constant current powered signal conditioning (CCPSC) circuit 100 connected to the equivalent circuit 22 (sensor 20 of figure 2) for converting the acceleration signal 50 into an output voltage signal indicative of a magnitude of vibration.

The first stage 30 of the constant current powered signal conditioning (CCPSC) circuit 100 is an active integrating amplifier (AIA) circuit 30. The AIA circuit 30 integrates the acceleration signal 50 by utilizing network (32) which includes capacitors C_2, C_3 and resistors R_1, R_2, R_3 and R_4 configured to a first op-amp U_1. Using the resistor and capacitor network 32 allows relatively small resistor values so that the disadvantages of large value resistors can be avoided.

The first op-amp U_1 has a noninverting input pin 3 connected to a first terminal B of the equivalent circuit 22, an inverting input pin 2 connected to a second terminal A of the equivalent circuit 22 through a resistance R_1, an output at pin 1 capacitively coupled to the second stage 40 of the CCPSC circuit 100, and a feedback loop including a capacitance (capacitors C_2 and C_3) coupled between the inverting input pin 2 and the output pin 1 of the first op-amp U_1.

A T-network results when resistor R_1 is excluded from network 32. The T-network includes a top branch having two portions and a base branch. The base branch includes impedance means (R_2 in parallel with C_2) having one end coupled to the inverting input pin 2 of the first op-amp U_1 and another end coupled to the intersection of the two portions of the top branch. The top branch includes resistive means (R_4) on one portion which is connected to the noninverting input pin 3 and an impedance means (R_3 in parallel with C_3) on another portion which is connected to the output terminal pin 1 of the first op-amp U_1.

The frequency at which the gain of the first stage 30 has a value of one is determined by the resistor and capacitor network 32.

The first stage 30 has a gain, $Gain_1$, that varies with the vibration frequency of the machine M. A simple calculation reveals the mid-band gain-frequency response:

$$Gain_1(f) = (1/R_1 C_2 + 1/R_1 C_3)/(2\pi f)$$

Which can be simplified as:

$$Gain_1(f) = 1/(2\pi f C_{23} R_1)$$

Where C_{23} is the serial capacitance of C_2 and C_3;

Where f = frequency in Hertz; and

Where π = the constant Pi 3.14...

The low frequency response of the integrated signal is determined by the equivalent piezoelectric crystal capacitance C_0 and the input impedance R_1 of the constant current powered signal conditioning (CCPSC) circuit 100.

The second stage 40 of the constant current powered signal conditioning (CCPSC) circuit 100 is capacitively coupled to the active integrating amplifier (AIA) circuit 30 (i.e. the first stage 30) for supplying a voltage output in accordance with the velocity voltage signal, whereby the output voltage is correlative of the vibration being monitored. The output of op-amp U_2 is directly coupled to a PNP transistor Q1.

Transistor Q_1 is configured as a common-collector (CC) transistor amplifier. This configuration is also called an "emitter follower", because its voltage gain is close to unity, and hence a change in base voltage appears as an equal change across the load at the emitter. In other words, the emitter follows the input signal. It can be shown that the input resistance of an emitter follower is very high (on the order of hundreds of Kilohms) and the output resistance is very low (on the order of tens of ohms). Hence, the most common use for the CC transistor circuit is as a buffer stage which performs the function of resistance transformation (from high to low resistance) over a wide range of frequencies, with voltage gain close to unity. In addition, the emitter follower increases the power level of the signal.

Q_1 functions as a signal output driver (buffer) and a current compensator. The current I_{Q1} is determined by the constant current I_O, the power consumption of U_1 and U_2, the current flow through the zener diode D_1, I_{D1} and the current losses, I_{loss} (through R_8, R_4 and R_2, R_3, R_4) which are relatively small.

$$I_{Q1} = I_{CD} - I_{D1} - I_{U1} - I_{U2} - I_{loss}$$

The impedance change of Q_1 multiplied by the transistor current I_{Q1} is the output signal voltage v_{cd} which overlaps onto the DC bias voltage V_{CD}. This output will be controlled by the second stage 40 which acts as a gain stage and a frequency compensator by trading off high gain of the op-amp U_2 for a larger bandwidth.

The change of the output voltage of op-amp U_2 is equal to the AC output voltage together with a very small variation due to the change in the voltage between the emitter and base of transistor Q_1 caused by the AC current, temperature, and the variation between different devices. This variation is compensated by the large gain of op-amp U_2. The total frequency response will not be influenced by the characteristics of the transistor Q_1. To find the mid-band gain of the second stage 40, an AC analysis of the constant current powered signal conditioning (CCPSC) circuit 100 is done. The inverting input pin 6 is "AC ground" (all the voltages are referenced to node D) The input voltage v_{in} through capacitor C_5 and resistor R_5 will generate a current I_{in} calculated by the equation:

$$I_{in} = v_{in}/R_5$$

Since the input impedance of U_2 is extremely high, very little current flows into op-amp U_2 pin 6 and virtually all the input signal current will flow to node E causing a change in the voltage at node E. v_e is calculated by the equation:

$$v_e = -I_{in} R_6 = -v_{in} R_6/R_5$$

This voltage will generate a current through resistor R_7 calculated by:

$$I_7 = v_e/R_7$$

The potential difference between node C and E will also generate a current through R_8 to node E calculated by:

$$I_8 = (v_c - v_e)/R_8$$

At node E, summing currents by the equation:

$$I_{in} + I_8 = I_7$$

establishes the value of I_7.

From the above equations, the mid-band voltage gain of the second stage 40 is derived. It is expressed as:

$$Gain_2 = v_{cd}/v_{in} = (R_7 R_8 + R_6 R_7 + R_6 R_8)/(R_5 R_7)$$

The total mid-band frequency response of constant current powered signal conditioning (CCPSC) circuit 100 from node A, B to C, D is the multiple of $Gain_1$ and $Gain_2$.

The above mid-band voltage gain equations of the constant current powered signal conditioning (CCPSC) circuit 100 reveals the characteristic of an output signal being independent of any active elements and dependent only on the passive components therein.

Regarding the mid-band, the output at pin 1 of the first stage 30 will have a phase shift of 90° referenced to the input, the second stage 40 will add an additional phase shift of 180°. Therefore, the overall phase shift will be 90° which is equal to the phase difference of velocity and acceleration. The high and low end phase shift will be determined by the poles and zeros of the constant current powered signal conditioning (CCPSC) circuit 100 which can be derived using transform methods common in the art.

Together, resistor R_6 and the optional capacitor C_6 will determine the high end of the frequency response. The capacitor C_6 is used to compensate for stray input capacitance between the inverting input at pin 6 of op-amp U_2 and AC ground and also between the noninverting input at pin 5 of op-amp U_2 and AC ground. The capacitor C_6 also compensates for any differential stray capacitance between the inputs of op-amp U_2.

Referring to figure 3, the DC voltage bias analysis of the constant current powered signal conditioning (CCPSC) circuit 100 comprising of a first stage 30 and the second stage 40 will be described. The constant current source 80 is conductively

coupled for providing the current in the branch consisting of a serially connected resistor R_{10} and zener diode D_1. This constant current source 80 provides the zener diode D_1 with a voltage at which the zener diode begins to operate in the breakdown region which is the criteria for the zener diode D_1 to operate as a voltage regulator thereby providing a highly stable reference voltage that is to be maintained across the diode. This regulated DC bias voltage is received by the input signal 50, the noninverting input at pin 3 of op-amp U_1 and the noninverting input at pin 5 of op-amp U_2. This voltage is higher than the reference potential of node D (circuit ground) by an amount equal to V_{BD}.

The output from the first stage 30 is the output from pin 1 of op-amp U_1. The DC output level of the first stage 30 (pin 1 of op-amp U_1) referenced to node D is equal to the voltage drop across the zener diode D_1. The output from the first stage 30 pin 1 referenced to node B is independent of any variation of the zener diode D_1. This output is capacitively coupled via capacitor C_5 to the input of the second stage 40. This in turn is coupled via potentiometer R_5 to the inverting input pin 6 of op-amp U_2. Potentiometer R_5 calibrates the overall sensitivity of the transducer 10 to compensate for the sensitivity variation of the sensor 20 (shown in figure 2).

The DC bias voltage applied to the noninverting input at pin 5 of op-amp U_2 will appear at the inverting input pin 6 of op-amp U_2 due to the ideal characteristics described previously. Also, the ideal characteristics indicate that the op-amp U_2 has no current flow into or out of the noninverting pin 5 and inverting pin 6 terminals. One result of the ideal characteristics is that the voltage regulator (zener diode D_1) remains unloaded (load current is not drawn from the branch containing resistor R_{10} and zener diode D_1).

The capacitors (C_5, C_6, and C_8) also prevent DC current flow in their respective branches. As a result, no DC current passes through resistor R_6. V_{D1}, the DC drop across the zener diode D_1, and resistors R_7, R_8 alone will determine the output DC bias voltage V_{CD}. Since op-amp U_2 has high gain (which is described above) it causes transistor Q_1 to draw just enough current from the constant current source 80 to force output V_{CD} to a voltage that will maintain the voltage across R_7 equal to V_{D1}. This must occur because the voltage across resistor R_6 caused by the input leakage current of op-amp U_2 is negligible. Resistors R_8 and R_7 form a voltage divider network for the output voltage V_{CD} having a value defined by:

$$V_{CD} = V_{D1}(R_7 + R_8)/R_7$$

This equation can also be derived by noting that the current V_{D1}/R_7 is flowing in resistor R_7 and that same current must flow through resistor R_8 (since no DC current passes through R_6 due to the ideal characteristics discussed above). Thus, a DC output voltage V_{CD} can be calculated from:

$$V_{CD} = (V_{D1}/R_7)\,(R_7 + R_8)$$

From the above equation, it is noted that the output DC bias is independent of "active" device parameters such as the PNP transistor Q_1. It is only determined by the passive elements (i.e. resistors) that are fairly stable throughout the range of operation in the environment. This feature provides distinct advantages of this invention over the prior art, especially by applying op-amps.

Voltage V_{CD} provides the DC bias voltage of the positive power supply terminal pin 8 and the negative supply terminal pin 4 which are shared by both op-amps U_1 and U_2. This DC voltage also provides the biasing of the constant current source 80. By using this "pre biased" technique, any noise of the first stage 30 created by ground loops and bias fluctuations of zener diode D_1 will be greatly reduced, greatly enhancing the transducer 10 performance.

Figures 4 and 5 show circuit schematics of alternative embodiments of the constant current powered signal conditioning (CCPSC) circuit 100 shown in figure 3. Note that the circuits shown in figures 4 and 5 share the same unique features as discussed supra with respect to the CCPSC circuit 100 shown in figure 3.

In essence, and referring to figure 4, input terminals A, B of a gain stage 230 receives an input signal 50 from a sensor 20 (figure 2). This input signal 50 is then amplified by the gain stage 230 and outputted to an input of a second stage 240 via capacitor C_3.

This amplified signal 250 is received and integrated by the second stage 240 and then outputted, by way of a transistor Q_1, onto the same plurality of transmission lines 244, 246 providing the constant current to the CCPSC circuit 200. The transmisison lines have first ends operatively coupled to the constant current power source 80 and second ends operatively coupled to terminals C and D.

The constant current source 80 provides a current to a first branch including a first resistance means, resistor R_{10}, connected in series with the first zener diode D_1 in the CCPSC circuit 200. This causes the zener diode D_1 to operate as a voltage regulator thereby providing a highly stable DC reference voltage V_{D1} that is maintained across the diode D_1. This regulated DC reference voltage V_{D1} is used to bias, above circuit ground, the input signal 50 and the amplified signal 250 to the gain stage 230 and the second stage 240, respectively. In addition, the regulated DC reference voltage V_{D1} works in cooperation with the second stage 240 to provide a stable DC voltage biasing of an output voltage signal vcd and the power supply bias terminals pin 4 and pin 8 which are shared by both U_1 (gain stage op-amp) and U_2 (feedback op-amp).

More specifically, the input of the gain stage 230 receives the input signal 50 from the sensor 20 which, as mentioned, utilizes a piezoelectric crystal 12 situated between a sensor base 14 and an inertial reference mass IM as a sensor 20 of acceleration (figure 2). When the sensor 20 is coupled to a source of vibration to be

monitored, the vibration of the source causes a compression or tension force to act on the piezoelectric crystal 12. The piezoelectric crystal 12, in turn, acts as a precision spring to oppose compression or tension forces thereby generating an electric charge. Thus, a signal directly proportional to the amplitude of acceleration of the source of vibration is produced at output terminals A and B of the sensor 20.

Referring to figure 4, the sensor 20 is modeled by the equivalent circuit 22 which includes a voltage source whose input signal 50 has a frequency equal to the vibration frequency of the source of vibration and whose amplitude is proportional to the magnitude of acceleration of the source of vibration. This voltage source is coupled in series with an equivalent capacitor C_0. Output terminals A and B of the equivalent circuit 22 of the sensor 20 are operatively coupled to nodes A and B and respectfully to the noninverting and inverting inputs of op-amp U_1 of the gain stage 230. The gain stage circuit 230 amplifies the input signal 50 received from the equivalent circuit 22 by using an op-amp U_1 along with a number of associated components. The op-amp U_1 provides the necessary amplification and the associated components (capacitors C_1, C_2 and resistors R_1, R_2 and R_3) are used to control the operation of the op-amp U_1 and effectively regulate the overall characteristics as well as the stability of the gain stage circuit 230. A closed loop including a capacitance C_1 and a resistance R_2 are connected in parallel and coupled between the output terminal and the input terminal of the gain stage.

Gain equation 3 represents the gain of the gain stage circuit 230 without the impedance of the crystal:

$$\text{Gain}_3(f) = [1 + R_2/(R_1(1 + 2\pi f\, C_1\, R_2))]$$

Gain equation 4 represents the gain of the gain stage circuit 230 with the source impedance of the crystal included:

$$\text{Gain}_4(f) = [2\pi f\, C_0\, R_3/(1 + 2\pi f\, R_3(C_0 + C_2))]\,[1 + R_2/R_1(1 + 2\pi f\, C_1\, R_2)]$$

Note from the above equation that the crystal impedance will affect the frequency response of the gain stage 230.

The gain stage circuit 230 then passes the amplified signal 250 on to the second stage 240 via capacitor C_3. The amplified signal 250 is then received, integrated and outputted to terminals C and D by the second stage 240 of the CCPSC circuit 200.

Gain equation 5 represents an integrator response (i.e., low pass filter) of the second stage 240:

$$\text{Gain}_5(f) = -[R_6(R_7 + R_8)/(R_5\, R_7 + 2\pi f\, C_4\, R_5\, R_6(R_7 + R_8))]$$

The second stage uses adjustable resistance R_5 to couple the amplified signal 250 to an inverting input (pin 6) of a feedback op-amp U_2. The output of feedback op-amp U_2 is directly coupled to a PNP transistor Q_1. In addition, a feedback loop runs from the output terminal of the feedback op-amp U_2, through the transistor

and to the inverting input terminal of the op-amp U_2. The transistor Q_1 is operatively coupled to the second ends of the transmission lines and functions as a signal output driver (buffer) which outputs an amplified and filtered velocity voltage signal v_{cd} across terminals C and D. Moreover, the output of op-amp U_2 causes an impedance change of transistor Q_1 thereby causing a change of impedance between terminals C and D. This impedance change of Q_1 along with the transistor current I_{Q1} results in a variable output voltage v_{cd} across terminals C and D, whereby the output voltage v_{cd} is correlative of the vibration being monitored.

In other words, a conditioned output signal from the output terminal, pin 7 of op-amp U_2, of the feedback op-amp U_2 drives and causes an impedance change of the transistor Q_1 wherein the impedance change along with an amount of the constant current through the transistor Q_1 provide the conditioned output signal v_{cd} to the second ends of the transmission lines 244, 246 and wherein the feedback loop returns a portion of the conditioned output signal back to the inverting input terminal of the feedback op-amp U_2 and is merged with the vibration signal 250 such that the conditioned output signal v_{cd} is indicative of the magnitude of vibration being monitored.

The zener diode D_1 is biased to operate as a stable DC voltage regulator providing a stable DC reference voltage V_{D1}, above circuit ground. This biasing is accomplished by the constant current source 80 providing a current in a branch consisting of a serially connected resistor R_{10} and the zener diode D_1.

The zener diode D_1 provides the stable DC reference voltage V_{D1} to the input signal 50 that is received by the gain stage 230 of the CCPSC circuit 200. In addition, the stable DC voltage V_{D1} is also applied to the noninverting input at pin 5 of the op-amp U_2. This voltage V_{D1} will appear at the inverting input pin 6 of op-amp U_2 due to the ideal characteristics of the op-amp U_2. Also, the ideal characteristics dictate that the op-amp U_2 has no current flow into or out of the noninverting pin 5 and inverting pin 6 terminals. The capacitors C_3 and C_4 also disallow DC current flow in their respective branches. As a result, no DC current passes through resistor R_6. Therefore, the stable DC voltage V_{D1} appearing at the inverting input pin 6 and at an end of resistor R_6 coupled thereto will appear at the opposite end of resistor R_6 without a voltage drop occurring across resistor R_6 thereby providing a regulated voltage V_{D1} across R_7. Note that the current through R_7 is provided by the constant current source and not by the regulated voltage V_{D1} itself, thereby providing an unloaded voltage V_{D1} across R_7.

The resistor R_7 is contained in a branch of two serially connected resistors, R7 and R8, having one end connected to terminal C and the second end connected to terminal D. The regulated voltage across R_7 draws a constant current through both R_7 and R_8. This sets up a stable DC voltage across terminals C and D which is used

to provide a stable DC bias voltage of the output signal v_{cd} and the power supply bias terminals pin 4 and pin 8 shared by both op-amps U_1 and U_2.

As a result of having the transmission lines 244, 246 double as the signal output lines the op-amps must be able to reject the output signal v_{cd} from interfering with the operating characteristics of the op-amps U_1 and U_2. The ability of the op-amps U_1 and U_2 to reject signals on the transmission lines 244, 246 from interfering with the operating characteristics of the op-amps U_1 and U_2 is referred to as the power supply rejection ratio (PSRR).

Figure 5 is a circuit schematic of that which is shown in figure 4 with at least one notable exception, i.e., a second zener diode D_2 is used to provide the stable DC voltage biasing of the power supply bias terminals pin 4 and pin 8 shared by both op-amp U_1 and U_2. This change may be incorporated in applications where it is found that the superposition of the output signal 252 on top of the power supply signal is affecting the characteristics of the circuit 200.

Note also that in figure 5 the connection between the positive power supply terminal, pin 8, of the op-amps U_1 and U_2 and terminal C is removed. Therefore, the output voltage signal v_{cd} at terminals C and D is not superimposed on top of the power supply signal biasing the op-amps U_1 and U_2. Instead, the positive power supply bias terminal, pin 8, of the op amps U_1 and U_2 is connected to a cathode of a zener diode D_2. An anode of the zener diode D_2 is connected to the negative power supply bias terminal, pin 4, of the op-amps U_1 and U_2.

Therefore, when the constant current source provides a current to zener diode D_2 via a resistor R_{13} the diode D_2 operates as a stable DC voltage regulator which provides the DC voltage biasing of the power terminals, pin 8 and pin 4, of the op-amps U_1 and U_2.

Referring to figures 4 and 5, the T-network 242 is used to couple terminals C and D to terminals C' and D' respectively. The T-network 242 includes a top branch having two portions and a base branch. The base branch includes capacitor C_5 having one end coupled to terminals D and D' and another end coupled to the intersection of the two portions of the top branch. The top branch includes resistor R_{11} on one portion which is connected to terminal C and resistor R_{12} on another portion which is connected to terminal C'. The purpose of the T-network 242 is to filter out any induced line transients on the lines connecting the constant current source 80 and the readout instruments 70 to the CCPSC circuit 200.

Figure 6 is a circuit schematic of an alternative embodiment of the constant powered signal conditioning (CCPSC) circuit 100 shown in figure 3. The circuit shown in figure 6 shares the same unique features as discussed supra with respect to the CCPSC circuit shown in figures 3 through 5.

The discussion of the second stage 340 shown in figure 6 follows the above discussion with respect to the second stage 240 shown in figure 4. However, there is at least one notable exception, i.e., the current I_0 which powers the CCPSC circuit 300 flows in an opposite direction through the circuit 300 as compared with that which is shown in figures 3, 4 and 5. To accomplish this the transistor Q_1 in figure 4 is changed from a PNP transistor Q_1 to an NPN transistor Q_2. In addition, the connections to the power supply bias terminals, pin 8 and pin 4, are swapped and the zener diode is turned around.

Figure 6 shows a charge coupled differential CCD amplifier stage 330 interposed between and operatively coupled to the sensor 20 (equivalent circuit 22) and to the feedback op-amp U_2. Input terminals A, B of the charge coupled differential amplifier stage 330 receive the vibration signal 50, i.e., the acceleration signal from the sensor 20, in terms of coulombs (charge). The CCD amplifier stage 330 converts the vibration signal 50 in terms of coulombs into a vibration signal 250 in terms of volts. The CCD amplifier stage 330 is able to make this conversion by implementing the equation V=Q/C where Q is charge, V is voltage and C is capacitance. The charge produced by the motion of the piezoelectric crystal 12 is applied to C_1 and C_2 (figure 6), this in turn produces a voltage, according to the equation V=Q/C at the output, pin 1, of a CCD op-amp U_1. A discussion of the connection between the output, pin 1, of the CCD op-amp U_1 and the feedback op-amp U_2 shown in figure 6 follows the above discussion with respect to the connection between the op-amps U_1 and U_2 shown in figures 3, 4 and 5. One advantage of using the CCD amplifier stage 330 is that the sensor 20 can be remotely located from the CCD op-amp U_1.

The charge coupled differential amplifier stage 330 is used to help reduce common mode noise. However, a single ended charge coupled (CC) amplifier stage could also accomplish the same conversion, changing the vibration signal 50 in terms of charge into a vibration signal 250 in terms of volts. This single ended charge conversion can be created by simply shorting out C_2 and R_3 in the CCD amplifier stage 330.

To recap, one hallmark of figures 3, 4, 5 and 6 resides in feedback op-amp U_2 receiving an input signal generated from a sensor and outputting an output signal which causes an impedance change of the transistor. This impedance change along with an amount of the constant current through the transistor provide the conditioned output signal v_{cd} across terminals C and D. In addition, a further attribute is that zener diode D_1 provides a DC reference voltage V_{D1} which works in cooperation with the feedback op-amp U_2 in order to provide stable DC voltage biasing across terminals C and D.

In use and operation, and referring to figure 3, the constant current powered signal conditioning (CCPSC) circuit 100 consists of a single monolithic chip with dual op-amps U_1 and U_2 therein and supporting hardware to perform the function of signal processing an input acceleration voltage signal (across terminals A,B) to an output voltage signal (across terminals C,D) for utilization by a readout instrument 70 connected thereto. Power for the constant current powered signal conditioning (CCPSC) circuit 100 is provided by a constant current source 80 outputting a constant current I_O.

A dual conductor transmission line (i.e. coaxial cable or a simple twisted pair) is not only used to monitor the output signal but is also used to provide the signal conditioning circuit 100 with operating power. Because the power supply leads double as the signal output leads two or three extra wires are eliminated in remote signal applications.

The constant current powered signal conditioning (CCPSC) circuit 100 integrates and amplifies the signal 50 by passing the signal 50 through two stages 30, 40. The first stage 30, an active integrator amplifier (AIA) circuit, integrates the input signal 50 via op-amp U_1 and circuitry configured thereto and outputs a voltage velocity signal which is capacitively coupled by capacitor C_5 to the second stage 40, which includes a high gain op-amp U_2 having its output directly coupled to the base of transistor Q_1 wherein Q_1 functions as a signal output driver (buffer) and a current compensator. The output of op-amp U_2 causes an impedance change of transistor Q_1. This impedance change of Q_1 is multiplied by the transistor current I_{Q1} to provide the output signal voltage v_{cd}, that corresponds to the vibration of the machine M, which overlaps onto the DC bias voltage V_{CD} which is provided by the biasing technique that follows.

At the outset the constant current source 80 provides the signal conditioning circuit 100 with a constant current at an initial DC bias voltage of 24 volts. This provides the current flow in the branch containing resistor R_{10} and a zener diode D_1. The zener diode D_1 is biased to function as a stable DC voltage regulator providing a stable DC reference voltage above circuit ground to the input signal 50, the noninverting input (pin 3) of op-amp U_1 and the noninverting input (pin 5) of op-amp U_2.

The ideal characteristics of op-amp U_2 provides the following effect: first, the DC regulated voltage that is provided at the noninverting input (pin 5) of op-amp U_2 will appear at the inverting input (pin 6) of op-amp U_2 and second, op-amp U_2 has no current flow into or out of the op-amp at both the noninverting (pin 5) and inverting (pin 6) terminals.

The capacitors C_5, C_6, and C_8 also prevent DC current flow in their respective branches. As a result, no DC current passes through resistor R_6 and the voltage

appearing at the inverting input pin 6 and the first end of resistor R_6 will appear at the second end of resistor R_6 without a voltage drop occurring across resistor R_6 thereby providing a regulated voltage across R_7. The current through R_7 is provided by the constant current source 80 and not by the voltage regulator D_1 itself thereby providing an unloaded voltage source across R_7.

The resistor R_7 is contained in a branch of two serially connected resistors, R_7 and R_8. This branch has a first end coupled to a first terminal C of the constant current source 80 and a second end coupled to the second terminal D (circuit ground) of the constant current source 80. The regulated voltage that is applied across resistor R_7 draws a constant current, from the constant current source 80, through said serially connected resistors, R_7 and R_8, and due to the high gain of op-amp U_2 the transistor Q_1 will provide a means to compensate for the remaining current that is provided by the constant current source 80. This unique biasing technique reduces the initial DC biasing voltage V_{CD} from 24 volts to 12 volts.

Therefore, the signal conditioning circuit 100 has the ability to provide its own stable DC bias voltage in which active components and their fluctuations are eliminated. This stable DC bias voltage V_{CD} is used for the biasing of the constant current source 80, the output signal and the power supply terminals pin 4 and pin 8 which are shared by both op-amps U_1 and U_2. This biasing technique is stable over a temperature range of -55°C to +125°C and for the life of the device.

The ability of an op-amp to reject signals on the power-supply line from interfering with the operating characteristics of the op-amp is referred to as the power-supply rejection ratio (PSRR). This characteristic allows the output signal to ride on top of the power supply signal without effecting the operating characteristics of the circuit.

Using the preferred components of the table below results in the conditioning circuit 100 having a 3db frequency response from approximately 2 Hz to 5 KHz over the stable bias temperature range of -55°C to +125°C.

Finally, it is noted that a very low AC impedance and a low temperature coefficient are required to maintain the stability of the circuit and frequency response. Judicious selection of op-amp U_1 is important to the performance of the transducer circuitry 100, because it will affect the noise, integration and large signal handling capacity of the circuit 100. In other words, op-amp U_1 should match the ideal characteristics as closely as possible.

Moreover, having thus described the invention, it should be apparent that numerous structural modifications and adaptations may be resorted to without departing from the scope and fair meaning of the instant invention as set forth hereinabove and as described hereinbelow by the claims.

The following table summarizes the values of the components employed in a preferred embodiment of the invention:

Element No.	Description	Value of Designation
R1	Resistor	20MΩ
R2	Resistor	10MΩ
R3	Resistor	10MΩ
R4	Resistor	750KΩ
R5	Resistor	1.3MΩ
R6	Resistor	20MΩ
R7	Resistor	10MΩ
R8	Resistor	20MΩ
R9	Resistor	1KΩ
R10	Resistor	20KΩ
C2	Capacitor	0.01μF
C3	Capacitor	0.01μF
C5	Capacitor	0.1μF
C6	Capacitor	2PF
C8	Capacitor	0.01μF
U1 and U2	Operational Amplifier	TL032
D1	Zener Diode	4V
C0	Piezo Crystal Capacitor	800PF
Q1	Transistor	PNP
I0	Current Source	3mA (typical)

Industrial Applicability

The industrial applicability of this invention shall be demonstrated through discussion of the following objects of the invention.

A primary object is to provide a device which does not require inordinate calibration because, *inter alia*, a majority of the components forming the circuit are passive elements, e.g. capacitors, resistors etc.

Another further object is to provide a reliable vibration sensor.

Another further object is to provide a vibration sensor which is stable both as a function of age and temperature change.

Another further object is to provide a vibration sensor which has an output DC bias independent of "active" device parameters.

Viewed from a first vantage point, it is an object of the present invention to provide a vibration monitor, comprising a sensor for monitoring vibration and for outputting an acceleration signal of amplitude proportional to the vibration and a constant-current, powered, signal conditioning (CCPSC) circuit connected to the sensor for converting the acceleration signal into an output voltage signal indicative of a magnitude of the vibration; the CCPSC circuit further including an active integrating amplifier (AIA) circuit having an input coupled to the sensor for integrating the acceleration signal into a velocity signal and an active high gain op-amp and buffer circuit coupled to the AIA circuit for supplying an output voltage in accordance with a voltage of the velocity signal; whereby the output voltage is indicative of the magnitude of vibration.

Viewed from a second vantage point, it is an object of the present invention to provide a vibration transducer including a sensor with a first voltage signal output representative of vibration input to the transducer, wherein the first voltage signal output correlative of an acceleration signal is received by a constant current powered signal conditioning circuit which comprises a first stage including a first op-amp to provide means for integrating the first voltage signal output and outputting a second voltage signal to a second stage including a second op-amp for inverting and amplifying the second voltage signal output and outputting a third signal representative of the vibration input wherein the conditioning circuit further comprises a regulated DC voltage reference and biasing means comprised of a first branch consisting of a serially connected first resistor and zener diode having a first end connected to a first terminal of the constant current source and and a second end connected to a second terminal of a constant current source by electrical connection means and the constant current source providing biasing means for the zener diode to function as a stable DC voltage regulator providing a regulated voltage; the first op-amp having inverting and noninverting inputs, power supply

terminals and an output, the first stage including circuitry providing means for receiving the first voltage signal output and effectively integrating the acceleration signal and outputting the second voltage signal which is correlative of velocity, the second op-amp having inverting and noninverting inputs, power supply terminals and an output; and the inverting input of the second op-amp connected to the output of the first op-amp by means of a second branch, the second branch consisting of a serially connected capacitor and second resistor and the second stage providing means for inverting and amplifying the output of the first op-amp.

Viewed from a third vantage point, it is an object of the present invention to provide a method for conditioning an input signal by self-biasing a circuit having an op-amp which includes an inverting signal input terminal, a noninverting signal input terminal, bias voltage terminals and a signal output terminal, the steps including: providing a bias voltage for the op-amp through the bias voltage terminals, directing an input signal into the inverting terminal of the op-amp, outputting a conditioned signal from the output terminal, and combining the conditioned signal with the bias voltage; whereby performance of the amplifier is self-adjusted by characteristics of the conditioned signal such that the conditioned output signal rides on top of the bias voltage.

Viewed from a fourth vantage point, it is an object of the present invention to provide a constant-current, powered, signal conditioning circuit including an op-amp having an inverting input terminal and a noninverting input terminal, an output and power supply terminals, a transistor operatively coupled to the output of the op-amp and between the power supply terminals; a constant current power supply providing a power supply signal and operatively coupled to the power supply terminals of the op-amp via power supply lines for powering the op-amp; an input signal into the inverting terminal of the op-amp; an output signal from the op-amp driving the transistor; the transistor providing a signal to the power supply lines; and power supply rejection means integrally formed within the op-amp; whereby the output signal from the transistor rides on top of the power supply signal of the conditioning circuit.

Viewed from a fifth vantage point, it is an object of the present invention to provide a transducer for monitoring operating parameters, comprising in combination: a signal sensing and generating means, an integrator circuit having an inverting input coupled to the signal generating means, the integrator circuit providing an integrated signal output, an op-amp including an inverting input, an output and self bias means, the inverting input coupled to the integrated signal output of the integrator circuit, and the output of the op-amp fed back to the integrator circuit.

Viewed from a sixth vantage point, it is an object of the present invention to provide, in a vibration monitoring device, a sensor means for sensing and generating an acceleration signal corresponding to existing vibration from the source, and a signal conditioning circuit receiving the acceleration signal and including an integrator circuit providing means for integrating the first signal into a velocity signal correlative of the vibration being monitored; the signal conditioning circuit further comprising in combination: an op-amp including an inverting and noninverting input terminals, an output terminal and power supply terminals, the inverting input coupled to the output of the integrator circuit, and the output of the amplifier provides the second signal which is correlative of the vibration being monitored, and means for monitoring the second signal.

Viewed from a seventh vantage point, it is an object of the present invention to provide a circuit for processing a vibration signal in a vibration monitoring device comprising in combination: a power source providing a constant current; a plurality of transmission lines having first ends and second ends; the first ends of the transmission lines operatively coupled to the constant current power source; a transistor operatively coupled to the second ends of the transmission lines; a feedback op-amp having an inverting input terminal, a noninverting input terminal, an output terminal and power supply bias terminals; the output terminal of the feedback op-amp operatively coupled to the transistor; a feedback loop from the output terminal of the feedback op-amp, through the transistor and to one input terminal of the feedback op-amp; and the vibration signal into the one input terminal of the feedback op-amp; whereby a conditioned output signal from the output terminal of the feedback op-amp drives and causes an impedance change of the transistor wherein the impedance change along with an amount of the constant current through the transistor provide the conditioned output signal to the second ends of the transmission lines and wherein the feedback loop returns a portion of the conditioned output signal back to the one input terminal of the feedback op-amp and is merged with the vibration signal such that the conditioned output signal is indicative of the magnitude of vibration being monitored.

These and other objects will be made manifest when considering the following detailed specification when taken in conjunction with the appended drawing figures.

Claims

I Claim:

Claim 1 - A vibration monitor, comprising:

a sensor for monitoring vibration and for outputting an acceleration signal of amplitude proportional to the vibration; and

a constant-current, powered, signal conditioning (CCPSC) circuit connected to said sensor for converting said acceleration signal into an output voltage signal indicative of a magnitude of the vibration, said CCPSC circuit further including,

an active integrating amplifier (AIA) circuit having an input coupled to said sensor for integrating said acceleration signal into a velocity signal, and

an active high gain op-amp and buffer circuit coupled to said AIA circuit for supplying an output voltage in accordance with a voltage of said velocity signal;

whereby said output voltage is indicative of the magnitude of vibration.

Claim 2 - The vibration monitor of claim 1, wherein said AIA circuit further comprises a first op-amp having a noninverting input connected to a first terminal of said sensor, an inverting input connected to a second terminal of said sensor through a resistance, an output capacitively coupled to said active high gain op-amp and buffer circuit and a feedback loop including a capacitance coupled between said inverting input and said output of said first op-amp.

Claim 3 - The vibration monitor of claim 2, including means operatively coupled to said first op-amp to maintain a substantially linear frequency over a range approximately from 2 Hz to 5 KHz.

Claim 4 - The vibration monitor of claim 3, wherein said AIA circuit includes:

a T-network including a top branch and a base branch, said base branch connected to said inverting input of said first op-amp,

said top branch including two portions coupled to said base branch and including resistive means on one said portion, impedance means on another said portion connected to said output of said first op-amp, and

said base branch including impedance means coupled to said inverting input of said first op-amp.

Claim 5 - The vibration monitor of claim 2 wherein said AIA circuit includes means to impart a 90° phase shift between said acceleration signal and said velocity signal.

Claim 6 - The vibration monitor of claim 5, wherein said AIA circuit includes:

a T-network including a top branch and a base branch, said base branch connected to said inverting input of said first op-amp,

said top branch including two portions coupled to said base branch and including resistive means on one said portion, impedance means on another said portion connected to said output of said first op-amp, and

said base branch including impedance means coupled to said inverting input of said first op-amp.

Claim 7 - The vibration monitor of claim 5, wherein said active high gain op-amp and buffer circuit includes means to impart a 180° phase shift of its input from said AIA circuit, whereby said velocity signal is inverted 180°.

Claim 8 - The vibration monitor of claim 1, wherein said active high gain op-amp and buffer circuit further comprises a second op-amp having a noninverting input connected to a first terminal of said sensor, an inverting input connected to said AIA circuit through capacitance and resistance, and said second op-amp has an output connected to a base of a transistor.

Claim 9 - The vibration monitor of claim 1, wherein said CCPSC circuit further comprises a DC bias circuit including a zener diode having a cathode connected to noninverting inputs of a first and a second op-amp and an anode connected to a second terminal of a constant current source.

Claim 10 - The vibration monitor of claim 9 including means to provide a stable bias over a temperature range of negative 55°C to positive 125°C formed in said CCPSC circuit.

Claim 11 - The vibration monitor of claim 1, whereby said CCPSC circuit includes passive components integrally formed in said CCPSC circuit to determine its gain and frequency response thereby eliminating the need for calibration of individual components during the lifetime of operation of said vibration monitor.

Claim 12 - A vibration transducer including:

a sensor with a first voltage signal output representative of vibration input to said transducer, wherein said first voltage signal output correlative of an acceleration signal is received by a constant current powered signal conditioning circuit which comprises a first stage including a first op-amp to provide means for integrating said first voltage signal output and outputting a second voltage signal to a second stage including a second op-amp for inverting and amplifying said second voltage signal output and outputting a third signal representative of said vibration input wherein said conditioning circuit further comprises a regulated DC voltage reference and biasing means comprised of:

a first branch consisting of a serially connected first resistor and zener diode having a first end connected to a first terminal of the constant current source

and and a second end connected to a second terminal of a constant current source by electrical connection means, and

the constant current source providing biasing means for said zener diode to function as a stable DC voltage regulator providing a regulated voltage;

said first op-amp having inverting and noninverting inputs, power supply terminals and an output,

said first stage including circuitry providing means for receiving said first voltage signal output and effectively integrating the acceleration signal and outputting said second voltage signal which is correlative of velocity,

said second op-amp having inverting and noninverting inputs, power supply terminals and an output; and said inverting input of said second op-amp connected to said output of said first op-amp by means of a second branch,

said second branch consisting of a serially connected capacitor and second resistor, and

said second stage providing means for inverting and amplifying said output of said first op-amp.

Claim 13 - The vibration transducer of claim 12 wherein said zener diode has a cathode connected to said noninverting inputs of said first and said second op-amps and an anode connected to said second terminal of said constant current source,

said second op-amp having said output terminal coupled to a base of a transistor, and

an emitter of said transistor coupled to a first end of a third resistor and a second end of said third resistor connected to said first terminal of the constant current source, and

a collector of said transistor directly coupled to said second terminal of the constant current source, and

said second stage including a voltage divider network having a third branch consisting of two serially connected resistors having a first end coupled to said first terminal of the constant current source and a second end coupled to said second terminal of the constant current source;

a fourth resistor having a first end connected to said inverting input of said second op-amp, and a second end connected to an electrical connection between said two serially connected resistors of said third branch,

whereby substantially no voltage drop is perceived either at said second op-amps inputs or across said fourth resistor so that constant current is generated through said voltage divider network and said third resistor with said transistor compensate for the remaining current emanating from the constant current source.

Claim 14 - The vibration transducer of claim 13 including means to provide a regulated voltage across a resistance contained in said serially connected resistors thereby drawing a constant current from the constant current source through said serially connected resistors thereby setting up a DC regulated bias voltage between the terminals of the constant current source and a feedback path to said power supply terminals of said op-amp providing self-biasing of said op-amp with a DC bias voltage, and

wherein said second resistor, and said third resistor determine said DC regulated bias voltage for the constant current source, and said power supply terminals of said first and second op-amps, and the output of said signal conditioning circuit.

Claim 15 - The vibration transducer of claim 14, wherein said first and second op-amp power supply terminals are operatively coupled to said first and second ends of the constant current source whereby the regulated voltage provided by said voltage divider network defines a self-biasing feedback loop to said first and second op-amp power supply terminals.

Claim 16 - The vibration transducer of claim 14, wherein said regulated voltage provided by said voltage divider network includes means to reduce the initial DC biasing voltage provided by the constant current source from 24 volts to 12 volts.

Claim 17 - The vibration transducer of claim 14, wherein said regulated voltage provided by said voltage divider network includes a DC voltage component that said third signal representative of said vibration input rides upon.

Claim 18 - A method for conditioning an input signal by self-biasing a circuit having an op-amp which includes an inverting signal input terminal, a noninverting signal input terminal, bias voltage terminals and a signal output terminal, the steps including:

providing a bias voltage for the op-amp through the bias voltage terminals,

directing an input signal into the inverting terminal of the op-amp,

outputting a conditioned signal from the output terminal, and

combining the conditioned signal with the bias voltage;

whereby performance of the amplifier is self-adjusted by characteristics of the conditioned signal such that the conditioned output signal rides on top of the bias voltage.

Claim 19- A constant-current, powered, signal conditioning circuit including an op-amp having an inverting input terminal and a noninverting input terminal, an output and power supply terminals,

a transistor operatively coupled to said output of said op-amp and between said power supply terminals;

a constant current power supply providing a power supply signal and operatively coupled to said power supply terminals of said op-amp via power supply lines for powering said op-amp;

an input signal into said inverting terminal of said op-amp;

an output signal from said op-amp driving said transistor;

said transistor providing a signal to said power supply lines;

and power supply rejection means integrally formed within said op-amp;

whereby said output signal from said transistor rides on top of said power supply signal of said conditioning circuit.

Claim 20- A transducer for monitoring operating parameters, comprising in combination:

a signal sensing and generating means,

an integrator circuit having an inverting input coupled to said signal generating means, said integrator circuit providing an integrated signal output,

an op-amp including an inverting input, an output and self bias means,

said inverting input coupled to said integrated signal output of said integrator circuit, and

said output of said op-amp fed back to said integrator circuit.

Claim 21- In a vibration monitoring device, a sensor means for sensing and generating an acceleration signal corresponding to existing vibration from the source, and a signal conditioning circuit receiving the acceleration signal and including an integrator circuit providing means for integrating said first signal into a velocity signal correlative of the vibration being monitored; the signal conditioning circuit further comprising in combination:

an op-amp including an inverting and noninverting input terminals, an output terminal and power supply terminals,

said inverting input coupled to the output of the integrator circuit, and

said output of said amplifier provides said second signal which is correlative of the vibration being monitored, and means for monitoring said second signal.

Claim 22 - A circuit for processing a vibration signal in a vibration monitoring device comprising in combination:

a power source providing a constant current;

a plurality of transmission lines having first ends and second ends;

said first ends of said transmission lines operatively coupled to said constant current power source;

a transistor operatively coupled to said second ends of said transmission lines;

a feedback op-amp having an inverting input terminal, a noninverting input terminal, an output terminal and power supply bias terminals;

said output terminal of said feedback op-amp operatively coupled to said transistor;

a feedback loop from said output terminal of said feedback op-amp, through said transistor and to one said input terminal of said feedback op-amp; and

the vibration signal into said one said input terminal of said feedback op-amp;

whereby a conditioned output signal from said output terminal of said feedback op-amp drives and causes an impedance change of said transistor wherein said impedance change along with an amount of said constant current through said transistor provide said conditioned output signal to said second ends of said transmission lines and wherein said feedback loop returns a portion of said conditioned output signal back to said one said input terminal of said feedback op-amp and is merged with the vibration signal such that said conditioned output signal is indicative of the magnitude of vibration being monitored.

Claim 23 - The circuit of claim 22 wherein said one said input terminal is said inverting input terminal of said feedback op-amp.

Claim 24 - The circuit of claim 23, further including a sensor operatively coupled to a source of vibration and generating the vibration signal.

Claim 25 - The circuit of claim 24, wherein said sensor includes:

a piezoelectric crystal operatively coupled between a sensor base and an inertial reference mass;

the source of vibration causes a compression or tension force to act on said piezoelectric crystal wherein said piezoelectric crystal acts as a precision spring to oppose compression or tension forces thereby generating the vibration signal having a frequency equal to the vibration frequency of the source of vibration and whose amplitude is proportional to the magnitude of acceleration of the source of vibration.

Claim 26 - The circuit of claim 25, further including means for providing a constant DC voltage to said second ends of said transmission lines.

Claim 27 - The circuit of claim 26 wherein said means for providing a constant DC voltage to said second ends of said transmission lines includes a first zener diode operatively coupled to said second ends of said transmission lines.

Claim 28 - The circuit of claim 27 wherein said means for providing a constant DC voltage to said second ends of said transmission lines further includes:

a first branch including a first resistance means connected in series with said first zener diode;

said first branch operatively coupled to said second ends of said transmission lines; and

said power source providing a constant current to said first zener diode through said first resistance for biasing said first zener diode to function as a stable DC voltage regulator providing a regulated voltage.

Claim 29 - The circuit of claim 28 wherein said means for providing a constant DC voltage to said second ends of said transmission lines further includes:

said noninverting input terminal of said feedback op-amp operatively coupled to an intersection of said first resistance and said first zener diode whereby said regulated voltage is applied to said noninverting input terminal of said feedback op-amp; and

means integrally formed within said feedback op-amp for applying said regulated voltage to said inverting input terminal of said feedback op-amp.

Claim 30 - The circuit of claim 29 wherein said means for providing a constant DC voltage to said second ends of said transmission lines further includes:

a voltage divider network having a second branch including a plurality of serially connected resistors;

said second branch operatively coupled to said second ends of said transmission lines; and

a resistor having a first end connected to said inverting input of said feedback op-amp, and a second end connected to an intersection of two of said plurality of serially connected resistors of said second branch.

Claim 31 - The circuit of claim 30 wherein said means for providing a constant DC voltage to said second ends of said transmission lines further includes:

means for substantially disallowing DC current flow through said resistor, thereby allowing said regulated voltage at said inverting input of said feedback op-amp and said first end of said resistor to appear at said second end of said resistor and across at least one of said plurality of serially connected resistors.

Claim 32 - The circuit of claim 31 wherein said regulated voltage across at least one of said plurality of serially connected resistors draws a constant current through said second branch thereby providing said constant DC voltage to said second ends of said transmission lines.

Claim 33 - The circuit of claim 32, further including a gain stage op-amp interposed between and operatively coupled to said sensor and said feedback op-amp wherein said gain stage amplifies the vibration signal and said feedback loop of

said feedback op-amp includes a capacitance providing means associated with said feedback op-amp for integrating the vibration signal.

Claim 34 - The circuit of claim 33 wherein said gain stage op-amp includes a noninverting input terminal operatively coupled to a first output terminal of said sensor and an inverting input terminal operatively coupled to a second output terminal of said sensor.

Claim 35 - The circuit of claim 34 wherein said gain stage op-amp further includes an output terminal connected to said inverting terminal of said feedback op-amp through a capacitance and an adjustable resistance.

Claim 36 - The circuit of claim 35 wherein said gain stage op-amp further includes a closed loop including a capacitance and a resistance connected in parallel and coupled between said output terminal and said inverting input terminal of said gain stage op-amp.

Claim 37 - The circuit of claim 36 wherein said gain stage op-amp further includes power supply bias terminals operatively coupled to said power supply bias terminals of said feedback op-amp.

Claim 38 - The circuit of claim 37 wherein said power supply bias terminals of said gain stage op-amp and said feedback op-amp are operatively coupled to said second ends of said transmission lines whereby said constant DC voltage across said second ends of said transmission lines provides a stable DC bias voltage for said gain stage op-amp and said feedback op-amp; and

power supply rejection means integrally formed within said gain stage op-amp and said feedback op-amp;

whereby the conditioned vibration signal from said transistor rides on top of said constant DC voltage across said second ends of said transmission lines.

Claim 39 - The circuit of claim 37 wherein said power supply bias terminals of said gain stage op-amp and said feedback op-amp are operatively coupled across a second zener diode;

said second zener diode is coupled in series with a second resistance means and said second resistance means and said second zener diode are operatively coupled across said second ends of said transmission lines;

said power source providing a constant current to said second zener diode through said second resistance means for biasing said second zener diode to function as a stable DC voltage regulator providing a regulated DC voltage to said power supply bias terminals of said gain stage op-amp and said feedback op-amp.

Claim 40 - The circuit of claim 32, further including an integrating op-amp interposed between and operatively coupled to said sensor and said feedback op-amp wherein said integrating op-amp integrates the vibration signal and said

feedback loop of said feedback op-amp includes resistance means associated with said feedback op-amp for amplifying the vibration signal.

Claim 41 - The circuit of claim 40 wherein said integrating op-amp includes a noninverting input operatively coupled to a first terminal of said sensor and an inverting input operatively coupled to a second terminal of said sensor through a resistance.

Claim 42 - The circuit of claim 41 wherein said integrating op-amp further includes an output terminal connected to said inverting terminal of said feedback op-amp through a capacitance and adjustable resistance.

Claim 43 - The circuit of claim 42 wherein said integrating op-amp further includes a closed loop including a capacitance coupled between said inverting input and said output of said integrating op-amp.

Claim 44 - The circuit of claim 43 wherein said integrating op-amp further includes power supply bias terminals operatively coupled to said power supply bias terminals of said feedback op-amp.

Claim 45 - The circuit of claim 44 wherein said power supply bias terminals of said integrating op-amp and said feedback op-amp are operatively coupled to said second ends of said transmission lines whereby said constant DC voltage between said second ends of said transmission lines provides a stable DC bias voltage for said integrating op-amp and said feedback op-amp; and

power supply rejection means integrally formed within said gain stage op-amp and said feedback op-amp;

whereby the conditioned vibration signal from said transistor rides on top of said constant DC voltage across said second ends of said transmission lines.

Claim 46 - The circuit of claim 32, further including a charged coupled differential amplifier stage interposed between and operatively coupled to said sensor and said feedback op-amp.

Claim 47 - The circuit of claim 46 wherein said charged coupled differential amplifier stage includes means to convert the vibration signal in terms of charge to a vibration signal in terms of voltage.

Claim 48 - The circuit of claim 47 wherein said converting means includes an op-amp having at least one input terminal operatively coupled to at least one capacitor and to at least one output terminal of said sensor whereby a charge produced by said sensor produces a voltage across at least one said capacitor.

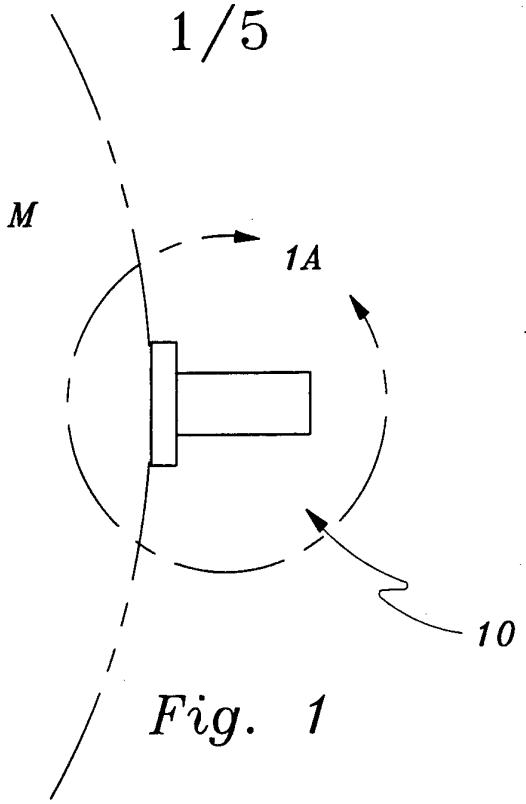

Fig. 1

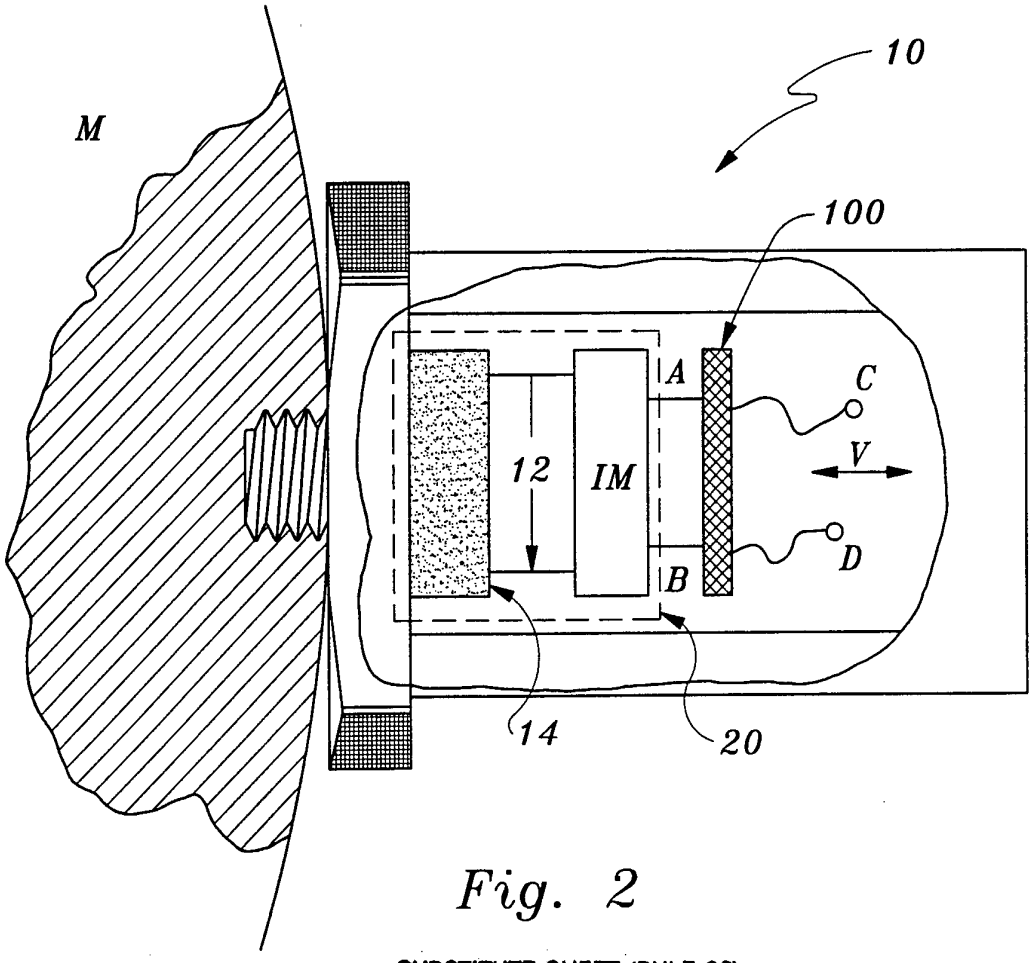

Fig. 2

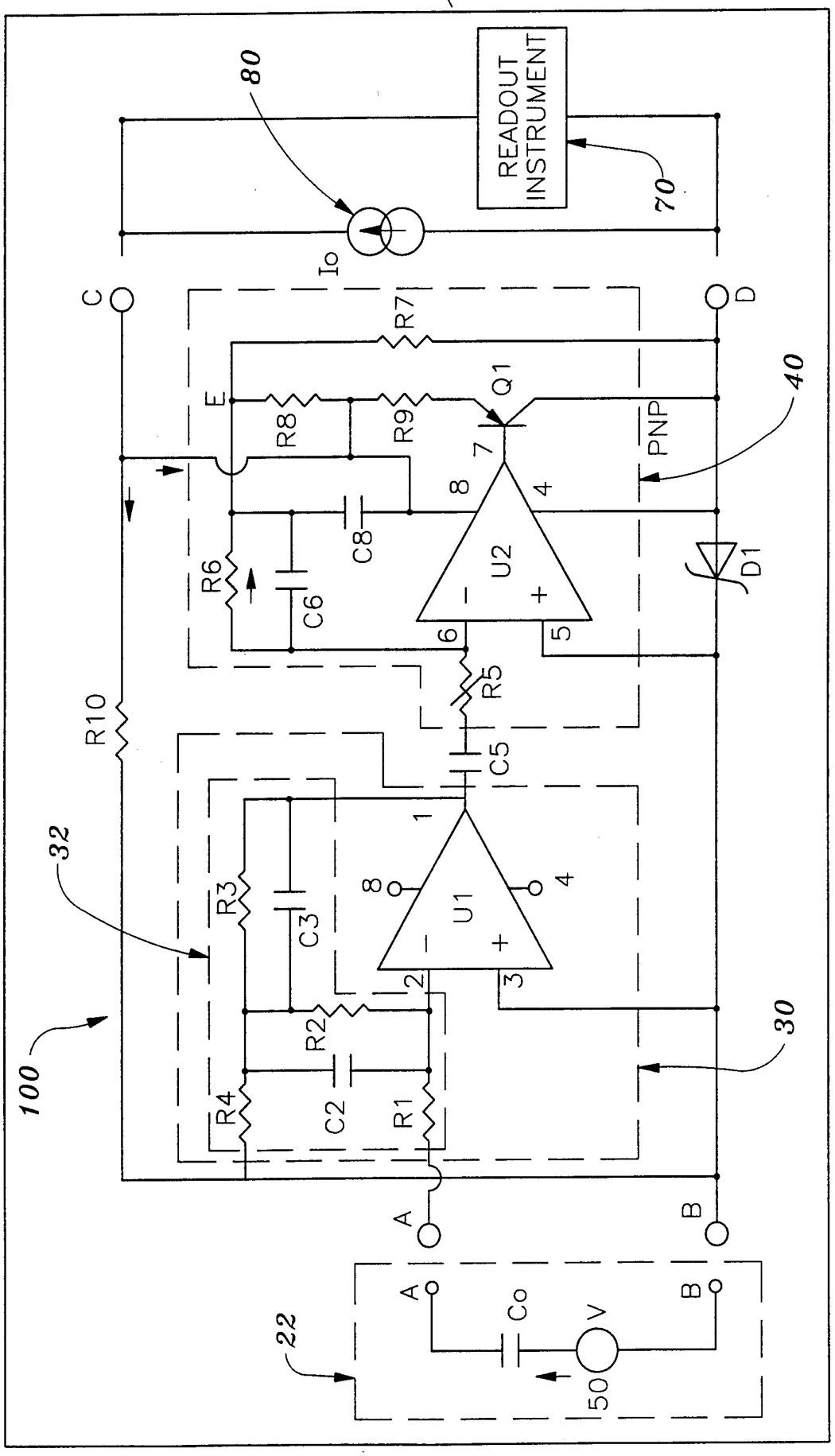
READOUT INSTRUMENT
80
70
Io
C
D
R7
E
R8
R9
Q1
PNP
40
7
8
4
C8
R6
C6
U2
D1
6
5
R5
R10
C5
32
1
8
4
R3
C3
U1
2
3
R2
30
100
R4
C2
R1
A
B
22
A
Co
V
B
50

Fig. 3

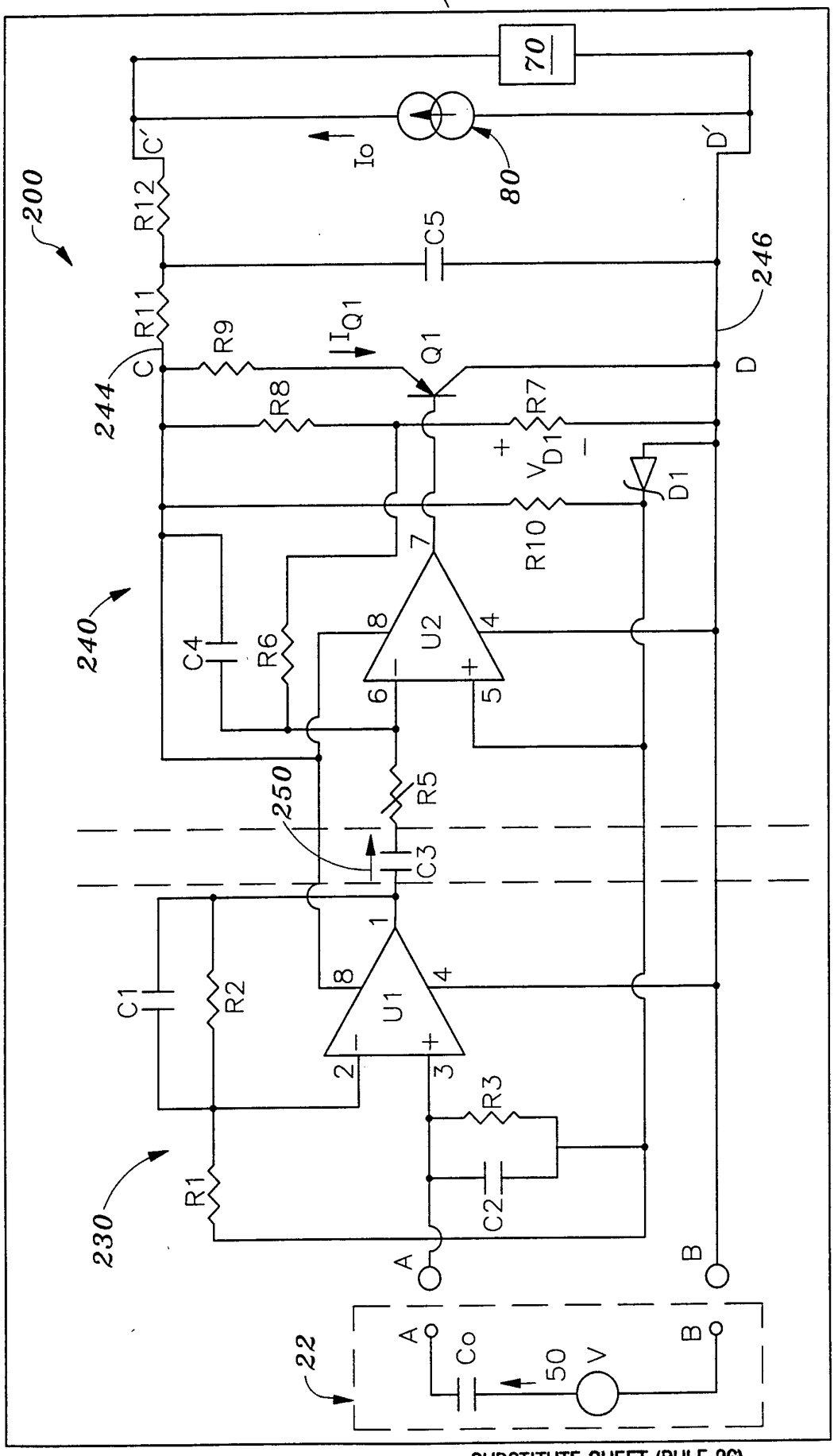
70
80
Io
C'
D'
200
R12
C5
246
R11
R9
I_{Q1}
Q1
C
D
244
R8
R7
V_{D1}
D1
R10
240
C4
R6
U2
7
8
4
6
5
250
R5
C3
1
C1
R2
U1
8
4
2
3
R3
230
R1
C2
A
B
22
A
Co
50
V
B

Fig. 4

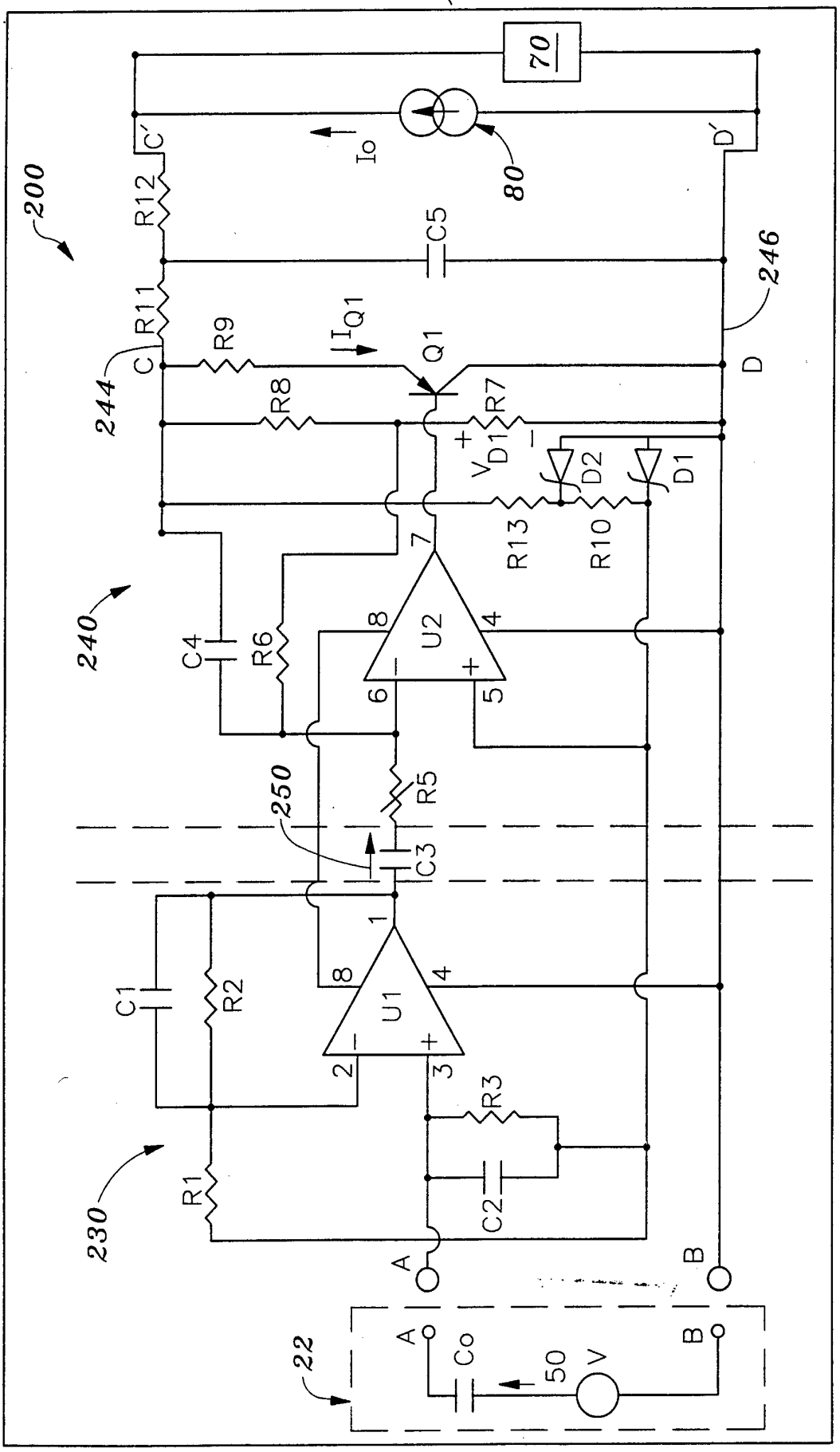
70
80
Io
C'
D'
200
R12
C5
246
R11
R9
I_{Q1}
Q1
C
D
244
R8
R7
V_{D1}
D2
D1
R13
R10
7
240
C4
R6
8
U2
4
6
5
250
R5
C3
1
C1
R2
8
U1
4
2
3
R3
C2
230
R1
A
B
22
A
Co
50
V
B

Fig. 5

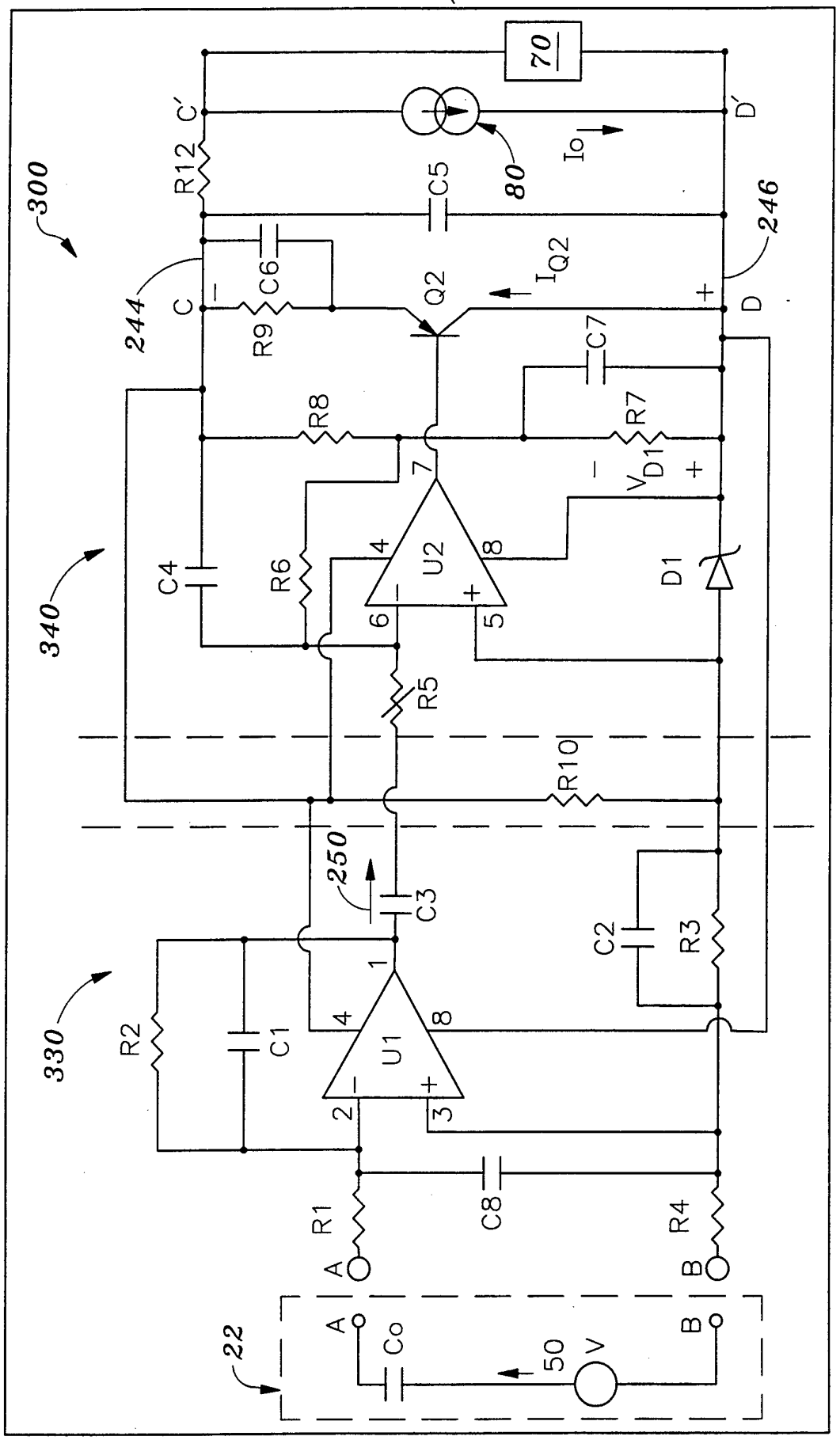
70
C'
D'
R12
C5
80
Io
300
246
244
C
D
C6
R9
Q2
IQ2
C7
R8
R7
7
VD1
U2
4
8
6
5
C4
R6
D1
340
R5
R10
250
C3
C2
R3
330
R2
C1
U1
1
4
8
2
3
R1
C8
R4
A
B
22
A
Co
50
V
B

Fig. 6