Dec. 31, 1946. W. H. COLBERT ET AL 2,413,605

PROCESS OF EVAPORATING METALS

Filed May 27, 1944

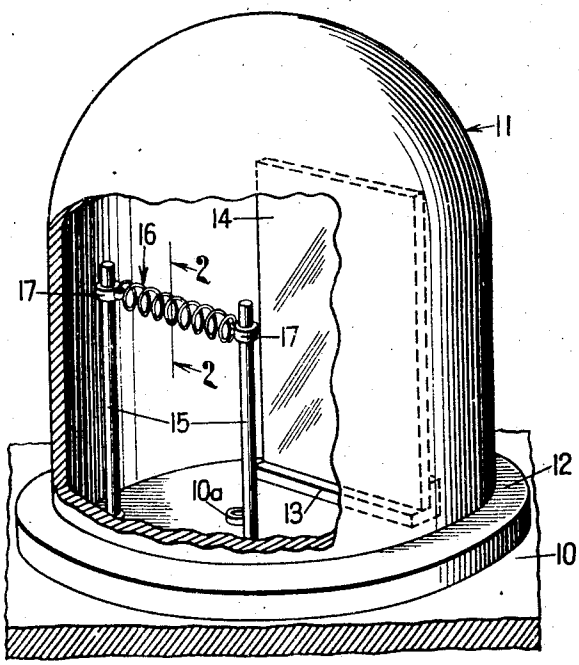

Fig. 1

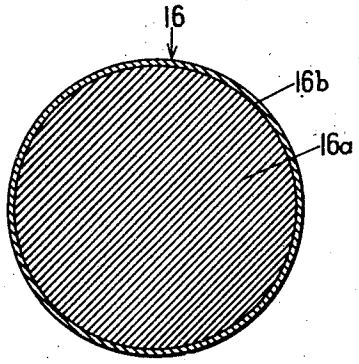

Fig. 2

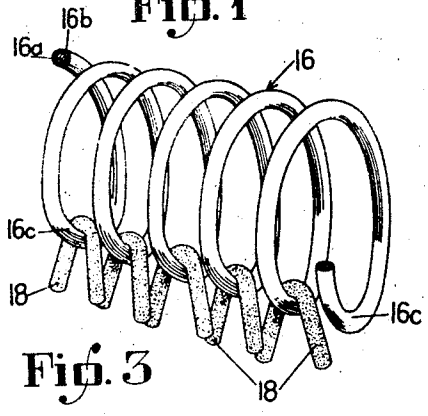

Fig. 3

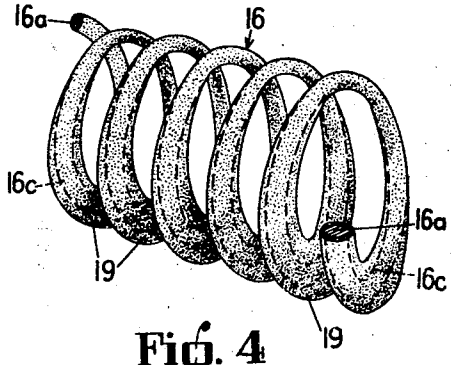

Fig. 4

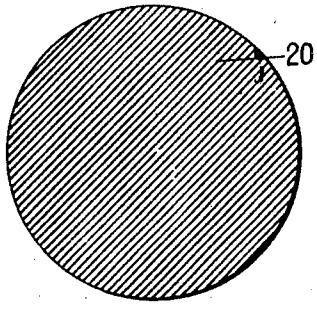

Fig. 5

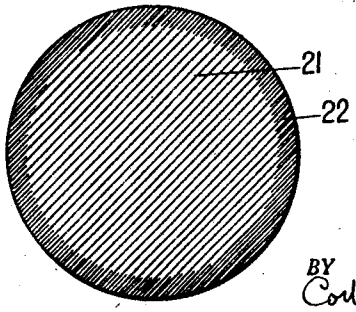

Fig. 6

INVENTORS
William H. Colbert.
Arthur R. Weinrich.
BY
Colbert, Mahoney & Miller
ATTORNEYS

Patented Dec. 31, 1946 2,413,605

UNITED STATES PATENT OFFICE

2,413,605

PROCESS OF EVAPORATING METALS

William H. Colbert and Arthur R. Weinrich, Brackenridge, Pa., assignors to Libbey-Owens-Ford Glass Company, Toledo, Ohio, a corporation of Ohio

Application May 27, 1944, Serial No. 537,676

9 Claims. (Cl. 117—107)

1

Our present invention relates to a novel method or process of evaporating metals. It has to do, more particularly, with the coating or wetting, by capillary attraction, of a filament which, for example, may be formed from a coil of alloyed tungsten wire, tantalum, molybdenum or columbium wire, by various metals which it is preferred to evaporate and which normally do not wet similar pure metallic filaments, and the application of said metal or metals by deposition resulting from thermal evaporation, to the face or surface of an article, such as a piece of glass, porcelain, plaster, metal, plastic, Cellophane, paper, or the like, to provide a reflective or metallized surface coating for said article.

Methods and apparatus have previously been employed to apply coatings of metals by thermal evaporation to the faces or surfaces of such articles to produce mirrors, reflectors, or metallized materials for other purposes. In these methods it is desirable to effect the thermal evaporation of the metal, such as silver or aluminum, by applying the metal directly to an electrically energized and thus heated tungsten or other metallic filament which is preferably located within a vacuumized chamber. The metals which may be used as filaments for such evaporations must obviously be of high melting point and also of low vapor pressure at the elevated temperatures at which the metals applied to the filaments evaporate. Thus, tungsten, tantalum, molybdenum and columbium have represented the only practical materials for such use. Platinum also has been used to a small degree but its high cost is generally prohibitive. While iron and nickel are of relatively low vapor pressure they are of such relatively low melting point that filaments made from them rapidly burn out.

With these filaments many of the metals can be readily evaporated. Thus, for example, aluminum, beryllium, magnesium, vanadium, barium, strontium, iron, nickel, cobalt, manganese, thorium, chromium and titanium, when applied to filaments of tungsten, tantalum, molybdenum or columbium, will on heating in a vacuum, melt and spread over the filament by capillary attraction and satisfactory evaporation of these metals then occurs from the large amount of surface which the molten metal covers.

2

However, with a large number of metals which it is desirable to be able to thermally evaporate and which from their vapor pressure at elevated temperatures should readily evaporate, it has been found difficult, if not impossible, to carry out satisfactory deposition of such coatings by thermal evaporation. Thus, for example, silver while readily lending itself to thermal evaporation from a crucible cannot be evaporated readily from a coil of tungsten, tantalum, molybdenum or columbium when applied to a filament of these metals and heated by electrical resistance. The silver on melting shows no affinity for the metallic filaments and almost immediately after melting collects into a drop and falls off the filament. This lack of ability to wet tungsten, tantalum, molybdenum and columbium occurs also with the metals copper, gold, zinc, tin, antimony, cadmium, bismuth, lead, thallium and indium. With each of these metals the use of the four available coil filaments as a means of evaporating these metals has not been possible, and less desirable means of heating have been necessary where it became necessary to evaporate these under practical conditions repeatedly in the commercial production of mirrors and metallic coated articles. As each of these metals, after melting, pulls together into droplets and falls off the filaments, there has resulted a wastage of the metal whenever it has been attempted to evaporate them from these filaments and there have been continuous failures of the apparatus to function due to the loss of the metals from the heated wires; and where any metal has been evaporated the amounts so evaporated have always been uncertain and without control.

We have found that we may use tungsten, tantalum, molybdenum or columbian as filaments for the evaporation of metals which do not wet these filaments and cause them to wet the filaments by first alloying such filaments with another metal which is characterized in that it will not only form an alloy with tungsten, tantalum, molybdenum and columbium but will also alloy with the metal we desire to evaporate. As metals which we have found which may be used in a relatively small quantity which cause the normally non-wetting metals to wet the alloyed metallic filaments we may use iron, nickel, cobalt, platinum or palladium, or several of these to-

gether. Thus, for example, we may add small amounts of nickel to a tungsten filament and when silver is melted on such an alloyed tungsten filament the silver will be found to wet the tungsten filament and to spread itself by capillary attraction over the surface of the tungsten wires. In the absence of the nickel, or upon a pure tungsten filament, the silver melts, draws itself into a droplet and falls off the filament wire because it does not wet the same. Not all metals, when pre-alloyed into the tungsten, et cetera, filament, have been found to act in this manner. In each case it is found that the metals of the iron group, namely, iron, nickel and cobalt and the metals of the platinum group, namely, palladium, platinum, rhodium and iridium, readily form alloys with tungsten, tantalum, molybdenum and columbium and also form alloys with copper, silver, gold, zinc, tin, antimony, cadmium, bismuth, lead, indium and thallium. Thus, the metals of the iron and platinum groups which we have enumerated readily bring about the desired wetting and it appears clearly that this is accomplished through the mutual alloying tendency which these metals possess.

One of the objects of our invention is to provide an improved and satisfactory method or process of evaporating metals which normally do not wet heater filament coils of tungsten, tantalum, molybdenum, or columbium, by alloying the filament so as to cause the metals to wet the coils of such filaments and to coat the coils by capillary attraction so that thermal evaporation can then be carried out.

Another object of our invention is to apply to an alloyed or coated tungsten, tantalum, molybdenum or columbium filament a pure metal to be evaporated which does not wet ordinary filament coils of the same pure filament metals to bring about a proper wetting or coating of the filament wires by capillary attraction under the influence of heat applied to the filament.

As another object of our invention there is provided an improved method or process whereby a metal which is to be evaporated and which does not normally wet heater filaments of tungsten, tantalum, molybdenum, or columbium is applied to a filament which has previously been alloyed with another metal, such as platinum, palladium, nickel, cobalt, or iron, which filaments readily become wetted and coated by capillary attraction with the metal desired to be evaporated by thermal evaporation, to provide an article with a reflective or metallized surface coating.

As a further object of our invention there is provided an improved method or process whereby a metal desired to be evaporated to form a reflective surface coating is applied to a tungsten, tantalum, molybdenum or columbium filament which has been alloyed with another metal, whose vaporizing temperature is higher and which metal brings about a wetting and coating of the alloyed filament by capillary attraction, thus permitting the deposition of the desired metal upon the face or surface of an article by thermal evaporation without appreciable evaporation of the alloying metal so as to give a reflective surface coating showing the characteristic properties of the desired metal only. Alternatively, the metal to wet the filament and to be evaporated may be alloyed with another metal which has an affinity for a pure metal filament, as set forth in our copending application, Serial No. 537,675.

A further object of our invention is to apply to an alloyed tungsten, tantalum, molybdenum or columbium filament a metal such as copper, silver, gold, zinc, tin, antimony, cadmium, bismuth, lead, indium or thallium, to bring about a desirable wetting or coating of the filament metal by capillary attraction under the influence of heat applied to the filament and thus permit thermal evaporation of the metals.

Generally speaking, and in accordance with our present invention, the metal to be evaporated which normally does not wet a pure metal heater filament is applied to the coils of an alloyed filament which may be formed from tungsten, tantalum, molybdenum or columbium and another metal or metals, the latter having an affinity for the metal to be evaporated and providing wetting characteristics. Thus, in order to thermally evaporate copper, zinc, gallium, or arsenic, which are metals of the chemical periodic table arrangement found in series 5 or the metals silver, cadmium, indium, tin and antimony, which include the metals of series 7, or the metals gold, thallium, lead and bismuth which in the periodic arrangement include series 11, all of which metals do not wet filaments made of pure tungsten, tantalum, molybdenum or columbium, we first bring about a satisfactory wetting and adhesion of these metals to the filaments by pre-alloying the filaments with another metal either selected from the iron group such as iron, nickel or cobalt, or selected from the platinum group metals such as platinum, palladium, rhodium or iridium, and then by energizing the alloy filament and thus heating it we cause a melting of the pure metals applied. When the applied metals are thus melted they apparently alloy to some degree with the metal used to alloy the heater filament wire and by reason of such tendency the molten metals wet the filament wires and by capillary attraction are drawn out over the surface of the coils. The molten metal which has thus covered considerable surface of the heated coil and is held thereto by capillary adhesion is thereafter evaporated uniformly from the heater coils to apply a surface coating of a metallic or reflective nature to an article such as a piece of glass, porcelain, silica, mica, plastic, metal, Cellophane, resin, or other support material, by deposition resulting from the thermal evaporation of the metal from the alloy filament. The operations of thermal evaporation may with some of the metals be carried out at normal pressure but generally are preferably carried out in vacuum chambers known to the art and within a high vacuum, which may be of the order of one millimeter down to 10 to the minus 5 millimeters or better. It is very necessary that the metal to be evaporated wet and coat the coil surfaces in order that the metal will evaporate uniformly in all directions. By securing such wetting action the thermal deposition of these metals, in addition to being made possible, has been found by our process to give uniform coatings.

We may proceed to secure the objects within the scope of this invention in various ways. Thus, we may start with a filament of tungsten, tantalum, molybdenum, or columbium which has been pre-alloyed with one of the metals of the iron or platinum group and apply the pure metal to be evaporated to the pre-alloyed filament as pieces, or otherwise. The filaments in such case are drawn into wire form and shaped from the preformed alloy. We may also previously alloy our filaments by applying a coating of the desired alloying element of the platinum or iron group and heating the filament to cause melting

of the coating and allowing with the wire in its surface. Such surface-alloyed filaments have been found to wet satisfactorily with all of the metals which otherwise do not wet the pure tungsten, tantalum, molybdenum, or columbium filaments. Such surface-alloying may be carried out during actual use during a thermal evaporation by merely starting with a filament which has a coating of the desired alloying element applied thereto. The filaments may also be prealloyed on the surface by making a preliminary evaporation from a pure tungsten, tantalum, molybdenum or columbium filament, of a small amount of our desired alloying element, such as a platinum metal or a small amount of the desired platinum or iron group metals may be left as a residue of an evaporation of an alloy of these with a more volatile metal. Such residues left upon the hot filaments alloy with the same and readily are wet by normally non-wetting metals thereafter. Thus, a silver alloy carrying a small amount of platinum, such as 5% to 15%, or iron to the extent of 1% to 10%, will wet a pure filament, as shown in our copending application. The platinum or iron remain alloyed with the filament after such an evaporation and pure silver, et cetera, may then be evaporated directly from this filament as it will thereafter wet directly with molten silver, gold, copper, et cetera.

The foregoing and other objects and advantages of the present invention will appear from the following description and appended claims when considered in connection with the accompanying drawing forming a part of this specification wherein similar reference characters designate corresponding parts in the several views.

In said drawing:

Figure 1 is a perspective view, partly broken away, showing a suitable apparatus for carrying out the improved method or process embodying our invention.

Figure 2 is an enlarged cross-sectional view, taken substantially along the line 2—2 of Figure 1, looking in the direction of the arrows, of a tungsten, molybdenum, tantalum or columbium electric resistance filament precoated with a thin layer of a platinum or iron group metal and in which there is a surface alloying with the filament metal when the coating is applied to the filament by a method involving the use of heat.

Figure 3 is a perspective view of the precoated filament shown in Figures 1 and 2 and upon which pieces of the pure metal to be evaporated have been hung.

Figure 4 is a perspective view after the filament and pieces of metal of Figure 3 have been heated to effect a wetting of the filament.

Figure 5 is an enlarged cross-sectional view of a filament formed from tungsten, molybdenum, tantalum, or columbium which is alloyed throughout with an iron or platinum group metal and upon which the pure metals, on melting, will directly show a good wetting action; and

Figure 6 is another enlarged cross-sectional view showing a filament of tungsten, molybdenum, tantalum or columbium which is alloyed only in the surface of the filament and which may be used directly as is the filament of Figure 5.

Before explaining in detail the present invention it is to be understood that the invention is not limited in its application to the details of construction and arrangement of parts illustrated in the accompanying drawing, since the invention

is capable of other embodiments and of being practiced or carried out in various ways. It is to be understood also that the phraseology or terminology employed herein is for the purpose of description and not of limitation, and it is not intended to limit the invention herein claimed beyond the requirements of the prior art.

Referring now particularly to Figure 1 of the drawing, we have shown a suitable apparatus for carrying out our improved method or process, as well as one suitable alloyed or coated filament.

Such suitable apparatus employed by us comprises, as shown, a supporting base 10 upon which is mounted a housing, shown as a whole at 11. The housing 11 may be in the form of a bell-jar or the like having a dome-like or semi-spherical top portion or enclosed end and a bottom open end having a surrounding flange or projection 12 which is adapted to rest upon the top face or surface of the supporting base 10.

Within the chamber provided by the housing 11, we have shown a suitable work-piece support 13 for supporting a work piece, such as a plate or piece of glass, plastic, plaster, paper, porcelain, metal, or the like 14, in upright position.

Located within the chamber and mounted upon the supporting base 10, is a pair of upright supporting posts 15 between which is carried or supported, in substantially horizontal position, an alloyed or coated electric filament, shown as a whole at 16. The filament, as shown, is in the form of a coiled wire made of tungsten, molybdenum, columbium or tantalum alloyed or coated with another metal, whose opposite ends are attached to brackets 17 mounted upon the supporting posts 15 and adjustable thereon so as to vary the position or location of the filament 16 with relation to the supporting base 10.

The chamber provided by the housing 11 may, if desired, be completely evacuated of air through outlet pipe or conduit 10a and have a high vacuum created therein by means of suitable air evacuating and vacuum creating means, such as a pump (not shown).

It is known that silver, copper and gold constitute a closely related family in the periodic table and lend themselves admirably to thermal evaporation but they have no wetting affinity for tungsten, tantalum, molybdenum or columbium surfaces and therefore silver, copper or gold alone is unsatisfactory for coating a pure metal filament formed from either of these metals by a wetting action effected by capillary attraction. Wetting of the filament wire is essential to secure a maximum of evaporating surfaces to provide evaporation uniformly in all directions, to the securing of uniform deposits, and also to avoid the dropping of the molten metal off the heater wires. We have found that platinum, while having a higher melting point than gold, copper or silver, readily alloys with silver, gold and copper and the alloys have a wetting affinity for the four above-mentioned metals. Also, platinum alloyed with the filaments lends itself particularly well to securing the wetting of a filament by capillary attraction with the ordinary non-wetting metals, such as silver, gold and copper.

Heretofore, when attempts were made to wet a pure metallic filament by the use of silver, copper or gold alone, only small portions of the molten metal would cling to the filament as droplets hanging from the lower ends of the coils of the filament, with the major portion of the molten metal dropping or falling off the coils. This was

particularly undesirable since it was practically impossible to produce, by thermal evaporation, an even surface coating by deposition, or to control the deposition to desired coating deposit thicknesses on the surface of an article, such as the article 14 to which it was desired to apply a reflective surface coating. By virtue of the fact that the silver, copper or gold did not properly wet the tungsten or other pure metal filament but had a tendency to drop off said filament, the process of coating with these metals by deposition was unsatisfactory, slow and painstaking because only a small portion or percentage of the filament received the metal coating. Considerable shutting down and starting over again was required when most of the gold, silver or copper on first melting dropped off the coils and no evaporation was secured. Thus, great waste occurred, the process was considerably slowed down, and the coating produced by deposition, if any, was uneven or spotty and unsatisfactory because of such uneven character thereof on the surface of the article coated. Commercial production under such uncertain conditions was impossible.

We have found that if, for example, the loops of a pure metallic electric filament were to have applied thereto pieces of pure silver, or of pure copper, and relatively smaller pieces of some suitable wetting or carrier metals, such as platinum or nickel, that when the coil or filament is energized and thus heated, whereby to cause a melting of the metals, the molten metals generally drop off the loops before sufficient alloying of these, and alloying and a wetting of the surfaces of the filament, occurs, and the results are uncertain and losses of evaporations and materials and time occur. This is always the case with the low melting metals such as zinc, cadmium, tin, lead and indium, which non-wetting metals melt quickly at low temperatures and fall off the heater wires or filaments before any appreciable solution or alloying with the higher melting iron or platinum metals occurs. Consequently, with all of the metals we find it necessary and desirable, in accordance with the present invention, to start with a pre-alloyed or coated filament. One such filament is shown as a whole at 16 in Figures 1, 2 and 3 of the drawing. The filament 16 has a core 16*a* which is preferably formed from tungsten, tantalum, molybdenum or columbium and which is platinum or palladium coated and surface-alloyed, as shown at 16*b*. Such a filament represents an ideal means of applying platinum or palladium, or iron, nickel or cobalt, to cause wetting by pieces of pure metal which are later applied to the coils or loops 16*c* of the filament 16.

It is to be understood that in carrying out the method or process as described above, in the chamber of the housing 11, the chamber, depending upon the metal being evaporated, may be at atmospheric pressure, or it may be evacuated of air and a vacuum created therein. Thereafter, after pieces of a suitable pure metal or metals, shown at 18, Figure 3, have been applied to the loops 16*c* of the alloyed or coated filament and the work piece 14 mounted upon its support 13 within the chamber of the apparatus, a vacuum of 10 to the minus 3 millimeters, or better, is created and the filament 16 is then energized and therefore heated so as to melt the applied metal pieces 18 to start in motion the wetting action of the filament by capillary attraction, as explained above. After the wetting action has been completed the coil or filament 16 will have the appearance of the filament shown in Figure 4. The filament is then further energized to increase the heat therein whereby the metal or metals in the molten coating upon the alloyed or surface-alloyed filament will be thermally evaporated and transferred by deposition to the face or surface of the work piece 14 which, as shown, see Figure 1, is disposed in a position opposite the filament 16. It will be understood that any platinum metals forming the alloy filament do not evaporate at the temperatures required to evaporate the applied metal or metals and that the reflective deposits produced in such cases are of reflective values and otherwise similar to gold, silver and copper mirrors made by evaporating these metals from crucibles within a high vacuum.

As stated above, the filament shown in Figures 1, 2 and 3 of the drawing is in the form of a wire or coil which is formed from tungsten or the like and is provided with a surface coating which may be an alloyed coating, formed from platinum or palladium, et cetera, or an iron group metal such as iron, nickel or cobalt, or of several of these metals.

As shown in Figure 3, the heater wire or coil 16 has hung onto its loops 16*c*, a plurality of the strips or pieces 18 which are formed from silver or other suitable pure metal. By hanging the strips or pieces 18 of the pure metal to be evaporated onto the coil and then heating the coil or filament sufficiently to melt the silver, copper or other metal pieces 18, there is a rapid wetting of the filament by the silver, copper, or the like, as shown at 19 in Figure 4 and an alloying with the filament alloy on the filament surface appears to occur.

As we have stated, we have found that where we have used platinum or palladium to secure the wetting action, these metals do not appreciably evaporate and are left behind on the tungsten or other metal heater wires after the silver, copper, et, cetera, evaporate. The same may be true of the iron metals at some operational temperatures. Such a platinum or palladium or iron, nickel or cobalt coated wire is surface-alloyed due to the heat during such previous operation. Such filaments as shown in Figure 2 and in Figure 6 present an ideal means of applying the platinum, palladium, iron, nickel or cobalt to the filaments and represent an ideal means to secure wetting when the normally non-wetting metals are hung thereon and melted. Thus by hanging strips 18 of the pure metal, such as silver or copper, to be evaporated thereon, as in Figure 3, and heating the coils sufficiently to melt these, there is a rapid wetting of the filament, as shown in Figure 4, and an alloying with the filament alloy on the filament surface appears to occur.

Specifically, a deposit of platinum was produced upon a tungsten filament by applying to a pure tungsten filament made of wire .040 inch in diameter upon each loop thereof 0.3 gram pieces of a silver platinum alloy containing 15% platinum and then evaporating the silver off of this by heating to a temperature in the neighborhood of 1700° C. in a high vacuum. With a filament coil of $\frac{5}{16}$ inch in diameter and four turns to the inch, the weight of platinum left on the surface of the tungsten and alloyed therewith was 10% of the weight of the tungsten. When pure silver pieces were then applied to this coil and the coil heated, the silver wetted the coil perfectly and a good thermal evaporation was secured.

In a similar way, a tantalum filament was alloyed in the surface by evaporating from each loop of such a filament of .040 inch diameter wire 0.2 gram pieces of a copper alloy containing 5%

platinum and 5% palladium. The platinum and palladium remained after the copper had evaporated as a surface alloy with the tantalum, each being approximately 3% by weight upon the weight of the tantalum. The alloyed tantalum filament then wetted readily with various non-wetting metals, such as copper, silver, gold and lead, when these were melted thereon and evaporation could be readily and uniformly carried out.

Molybdenum and columbium filaments may be pre-alloyed in their surface in such manner as just described to secure filaments showing good wetting characteristics.

Obviously, a filament comprising an alloy throughout of tungsten, molybdenum, tantalum or columbium with palladium or platinum or iron, nickel or cobalt as shown in Figure 5 can also be similarly used, in which case the wire is drawn from a preformed uniform alloy.

In Figure 5 of the drawing, we have shown an enlarged cross section of a heater wire, coil or filament in which the wire is formed preferably from tungsten alloyed with a suitable coating metal and which appears in cross section like that shown at **20** in this figure. The filament or wire **20** of this figure may comprise an alloy throughout of tungsten, molybdenum, tantalum or columbium with palladium or platinum or one of the iron metals in small amounts, or of a mixture of these various elements.

In Figure 6 we have shown another modified form of heater wire, coil or filament in which the core thereof may be formed from tungsten, as shown at **21**, and in which the core **21** is provided with an alloyed surface coating **22** formed with any of the metals suitable for bringing about wetting.

In accordance with another form of our invention (not illustrated), we may precoat the tungsten or other metal comprising the heater coil or filament with a thin platinum coating, or other iron group or platinum group metal, either by electroplating, by hot-dipping, by sputtering, by heating and decomposing metallic compounds applied thereto, or by any other suitable means. Such precoated coil as that shown in Figure 2, for example, readily wets with silver, copper or gold since these metals melt and alloy with the platinum or other applied metal, and the coating on melting also rapidly alloys with the filament due to the heat.

Thus, from filaments of tungsten which have had a small amount of platinum or palladium or a mixture of these deposited on their surface by sputtering or by thermal evaporation or as a residue from a prior evaporation of a metal alloy from such filament which contained platinum or palladium, we have successfully evaporated the metals tin, cadium, indium, lead, zinc, thallium, bismuth, antimony, copper, gold and silver. In each case these metals which would not wet pure uncoated tungsten wetted the tungsten, coated and surface-alloyed with the platinum or palladium. The metals spread out over the heater filament wires and did not drop off. The same was found true for filaments of tantalum, molybdenum and columbium, and iron, nickel or cobalt could be used in place of the platinum or palladium.

We may similarly use filaments of tungsten, tantalum, molybdenum or columbium, as in Figure 2, which have been precoated while cold with platinum, palladium, nickel, cobalt or iron by thermal evaporation of these metals from other hot filaments in a vacuum. Thus, a small amount of nickel was evaporated from a tungsten or platinum filament onto other cold tungsten filaments. By way of example, with tungsten filaments of wire .035 inch diameter deposits of nickel thereon ranging from .0005 to .0036 centimeter thick comprising 1% to 7% by weight of the tungsten filament were quickly wetted and coated by capillary action when tin, cadmium, indium, lead, gold, silver or copper pieces were melted thereon within a vacuum and thermal evaporation of these metals could then be readily carried out. Similarly, tungsten wire .035 inch diameter upon which nickel, cobalt or iron coatings .0002 to .0003 inch were electroplated were found to wet well and permit satisfactory evaporation of all these various metals which normally cannot be evaporated from tungsten coils. Using a tungsten coil of this nickel, cobalt or iron electroplated wire wound four turns to the inch as a $\frac{3}{16}$ inch diameter coil and applying a load to each loop thereof of silver of 0.2 gram the silver readily wetted the nickel, iron or cobalt electroplated tungsten wire, when the wire was heated by an electric current. Surface alloying occurred and in these cases the nickel, iron or cobalt was 1.1% of the total weight of the tungsten and 1.9% of the weight of the silver. Weights of the iron metals applied to either tungsten, molybdenum, columbium or tantalum filaments of 0.5% to 5% of the filament weight have given readily wetted filaments.

Instead of applying pieces of the pure metal to be evaporated to our surface-alloyed or surface-coated filaments, the metal to be evaporated may be coated upon our surface-alloyed or surface-coated filaments. Thus the nickel-electroplated tungsten or the platinum surface-alloyed tungsten filaments already described may have a coating of lead electroplated thereon and when these are placed in the vacuum chamber and the filament energized the lead wets the filament and thereafter good evaporation is secured.

The use of our metals such as platinum, palladium, iridium or rhodium to bring about a satisfactory wetting and evaporation has been particularly attractive in that when used with the metals which it has been desired to evaporate, these metals, platinum, palladium, iridium and rhodium have not appreciably evaporated so that the deposits of silver, copper, tin, lead or other metals have been secured essentially pure and as mirrors they have shown the full normal reflectivity and colors characteristic of pure mirror deposits of these metals. Thus, with silver 95% reflection value mirrors may be readily secured when using palladium or platinum as the alloying metal. From the following table of temperatures at which the vapor pressure of the different metals is 0.01 millimeters, it is apparent that, as these are also the boiling or evaporating temperatures in a vacuum of this pressure, there is negligible chance of contamination of the metal deposits with the platinum metals since the vapor pressures of these are negligible below 2000° C. at which the various elements under consideration would evaporate. On the other hand the use of iron, nickel or cobalt alloyed in the filament in the evaporation of gold, copper or tin might be expected to give mirror deposits containing some iron, nickel or cobalt. Moreover, iron, nickel or cobalt alloyed in the filament can be used in the thermal evaporation of antimony, bismuth, zinc and cadmium without their contaminating the mirror deposits secured.

Metal	Temperatures at which metal boils		melting point
	At 0.01 mm. pressure	At 760 mm. normal atmospheric pressure	
	° C.	° C.	° C.
Cadmium	268	780	321
Zinc	350	930	419
Bismuth	640	147	271
Antimony	700	1,380	630
Lead	727	1,800	327
Tin	875	2,260	232
Chromium	917	2,200	1,615
Silver	1,046	2,040	960
Gold	1,172	2,600	1,063
Aluminum	1,188	1,800	659
Manganese		1,900	1,260
Copper	1,269	2,300	1,083
Iron	1,421	3,000	1,535
Nickel	1,444	2,900	1,452
Cobalt		2,900	1,480
Platinum	2,059	4,300	1,755
Palladium		2,200	1,555
Iridium		4,400	2,440
Rhodium		+2,500	1,985
Tantalum		+4,100	2,850
Tungsten	3,232	5,900	3,370
Molybdenum	2,482	3,700	2,620
Columbium			1,950

A further advantage of very practical importance in the thermal evaporation of the various metals has been secured through our securing good wetting of the filaments in that the metals being evaporated show very little explosive boiling or spitting which by reason of small chunks of metal blown over onto the article being coated has caused spoilages. This appears to have been accomplished by the decrease of surface tension forces accompanying the wetting and also in the elimination of conditions leading to super-heating by getting the metal to spread out in a thin coating over most of the filament surfaces.

From the foregoing it will be seen that we have provided an improved method or process wherein certain metals applied to an alloyed filament of tungsten, tantalum, molybdenum or columbium are caused to give a desirable wetting resulting from capillary attraction upon the application of heat from the filament, and have thereby been able to carry out evaporation of such metals after the wetting action has been completed by thermally evaporating the metal or metals and have caused their deposition upon the face or surface of a work piece to provide metallized or reflective surface therefor. It will also be seen that while we secure the desirable requisite of wetting of the alloyed filaments of tungsten, tantalum, molybdenum or columbium, by a metal or metals which normally do not wet these, by the use of a platinum group or iron group metal this may be accomplished in several ways. We preferably start with a filament carrying a surface alloy or coating of the filament metal and an iron group or platinum group metal and the pure metals which will not wet the pure filament are found when applied as pure metals to wet our filaments carrying the preferred surface coatings and alloy. We may also in a similar way to the latter use a filament previously alloyed throughout with a metal of the iron or platinum group.

While we have referred to the use of tungsten, tantalum, molybdenum or columbium as suitable metals from which the coiled alloyed filament or element 16 may be formed, other suitable metals may be used for this purpose. We have mentioned these metals particularly since their high melting points and low vapor pressures at the boiling temperatures of other metals as shown in the above table make these the practically desirable metals for use as such filaments.

We have described our improved method or process as preferably being carried out in a vacuumized chamber in which the step of wetting the filament takes place, as does also the step of thermal evaporation of the metal to effect its deposition upon the work piece to provide a reflective coating thereupon. It will be understood, however, that if desired the alloyed filaments, as described above, may be produced in the manner outlined, prior to being placed in the vacuum, for later use in the deposition by thermal evaporation of the metal coating thereon in a vacuum as a reflective surface coating for a work piece or work pieces. Obviously also in the case of the most readily volatile metals, such as cadmium and zinc, the melting of the metals and the wetting of the filaments as well as the evaporation of the readily volatile metals, such as cadmium or zinc, may be carried out under atmospheric conditions of pressure if desired, while employing a suitable inert atmosphere.

Having thus described our invention, what we claim is:

1. The method of producing coatings by the evaporation of a metal melting below 1900° C. from a filament selected from the group consisting of tungsten, tantalum, molybdenum and columbium which it normally does not wet or adhere to, wherein pieces of the metal are applied to the filament and heated on such filament, in which said filament has been previously alloyed with another metal selected from the group consisting of platinum, palladium, iron, nickel and cobalt, which alloyed filament causes the metal desired to be evaporated to wet, to adhere to, and to spread out over the filament surfaces, and by the continued application of heat, to evaporate and to deposit upon an article to be coated.

2. The method of producing coatings by the evaporation of copper from a filament selected from the group consisting of tungsten, tantalum, molybdenum and columbium which it normally does not wet or adhere to, wherein pieces of the copper are applied to the filament and heated on such filament, in which said filament has been previously alloyed with another metal selected from the group consisting of platinum, palladium, iron, nickel and cobalt which alloyed filament causes the copper to wet, to adhere to, and to spread out over the filament surfaces, and by the continued application of heat, to evaporate and to deposit upon an article to be coated.

3. The method of producing coatings by the evaporation of silver from a filament selected from the group consisting of tungsten, tantalum, molybdenum and columbium which it normally does not wet or adhere to, wherein pieces of the silver are applied to the filament and heated on such filament, in which said filament has been previously alloyed with another metal selected from the group consisting of platinum, palladium, iron, nickel and cobalt which alloyed filament causes the silver to wet, to adhere to, and to spread out over the filament surfaces, and by the continued application of heat, to evaporate and to deposit upon an article to be coated.

4. The method of producing coatings by the evaporation of a metal melting below 1900° C. from a filament selected from the group consisting of tungsten, tantalum, molybdenum and columbium which it normally does not wet or adhere to, wherein pieces of the metal are applied

to the filament and heated on such filament, in which said filament has been previously alloyed with platinum, which alloyed filament causes the metal desired to be evaporated to wet, to adhere to, and to spread out over the filament surfaces, and by the continued application of heat, to evaporate and to deposit upon an article to be coated.

5. A method according to claim 1, wherein the coating is a mirror coating and wherein the evaporation of the metal occurs within a vacuum.

6. The method of producing coatings by the evaporation of a metal melting below 1900° C. from a filament selected from the group consisting of tungsten, tantalum, molybdenum and columbium which it normally does not wet or adhere to, wherein pieces of the metal are applied to a coated filament coated with another metal selected from the group consisting of platinum, palladium, iron, nickel and cobalt, heating the filament to cause the metallic coating to alloy with the filament and to alloy with the metal desired to be evaporated and cause said metal to wet, to adhere to, and to spread out over the filament surfaces, and by the continued application of heat, to evaporate and to deposit upon an article to be coated.

7. The method of producing coatings by the evaporation of silver from a filament selected from the group consisting of tungsten, tantalum, molybdenum and columbium which it normally does not wet or adhere to, wherein pieces of the silver are applied to a coated filament coated with platinum, heating the filament to cause the platinum coating to alloy with the filament and to alloy with the silver and cause said silver to wet, to adhere to, and to spread out over the filament surfaces, and by the continued application of heat, to evaporate and to deposit upon an article to be coated.

8. The method of producing coatings by the evaporation of copper from a filament selected from the group consisting of tungsten, tantalum, molybdenum and columbium which it normally does not wet or adhere to, wherein pieces of copper are applied to a coated filament coated with platinum, heating the filament to cause the platinum coating to alloy with the filament and to alloy with the copper and cause said copper to wet, to adhere to, and to spread out over the filament surfaces, and by the continued application of heat, to evaporate and to deposit upon an article to be coated.

9. The method of producing coatings by evaporation of a metal melting below 1900° C. from a filament selected from the group consisting of tungsten, tantalum, molybdenum and columbium which it normally does not wet or adhere to, wherein pieces of the metal are applied to a coated filament coated with platinum, heating the filament to cause the platinum coating to alloy with the filament and to alloy with the metal desired to be evaporated and cause said metal to wet, to adhere to, and to spread out over the filament surfaces and by the continued application of heat, to evaporate and to deposit upon an article to be coated.

WILLIAM H. COLBERT.
ARTHUR R. WEINRICH.