Dec. 8, 1970 R. G. COOK 3,546,657

HIGH CONTACT DENSITY UNDERWATER CONNECTOR

Filed July 29, 1968 3 Sheets-Sheet 1

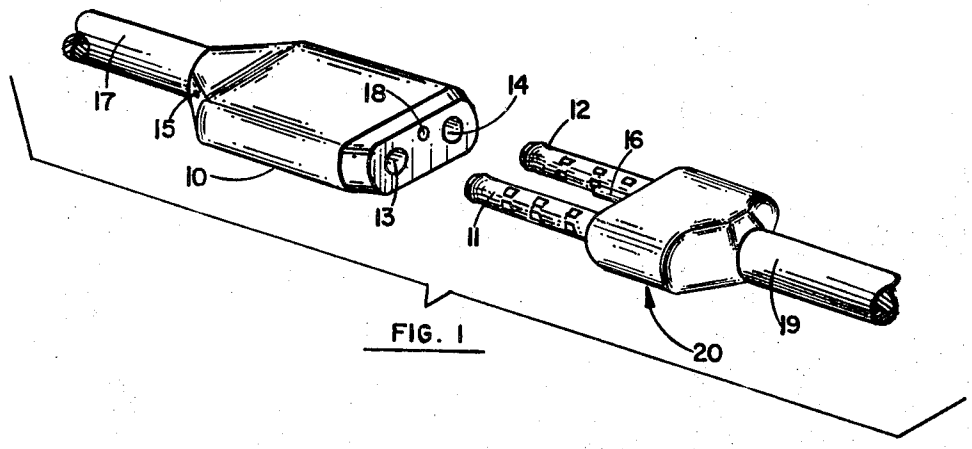

FIG. 1

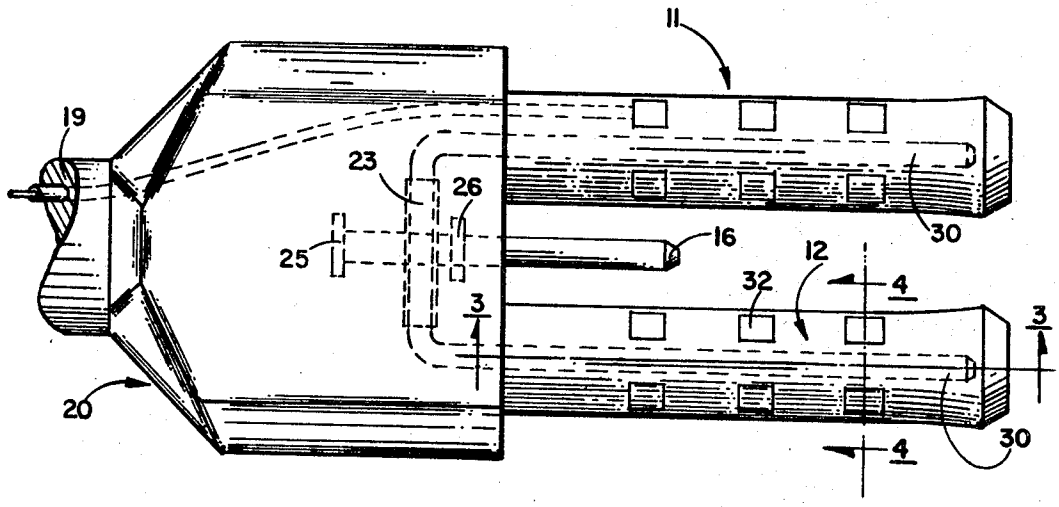

FIG. 2

INVENTOR.
ROBERT G. COOK
BY Edward Rogas
ATTORNEY

Dec. 8, 1970 R. G. COOK 3,546,657

HIGH CONTACT DENSITY UNDERWATER CONNECTOR

Filed July 29, 1968 3 Sheets-Sheet 2

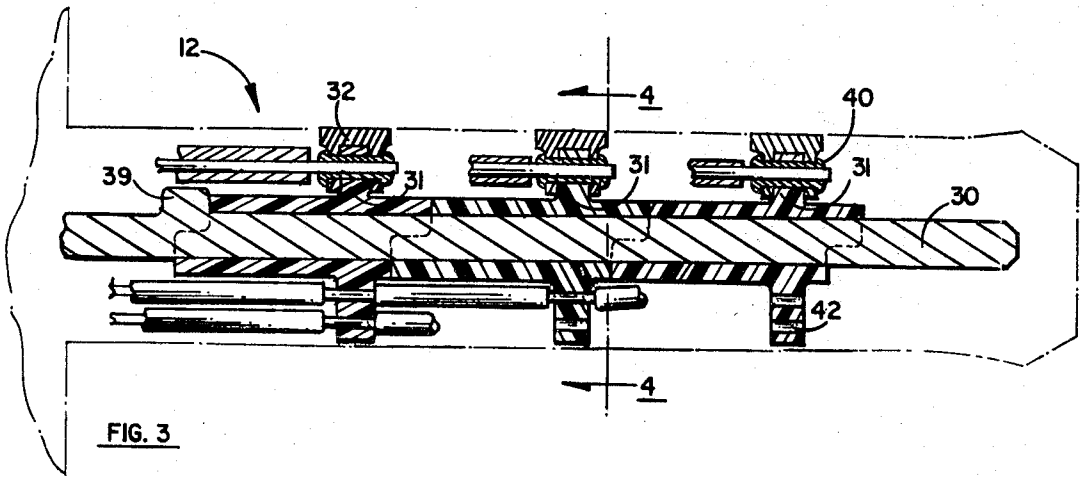

FIG. 3

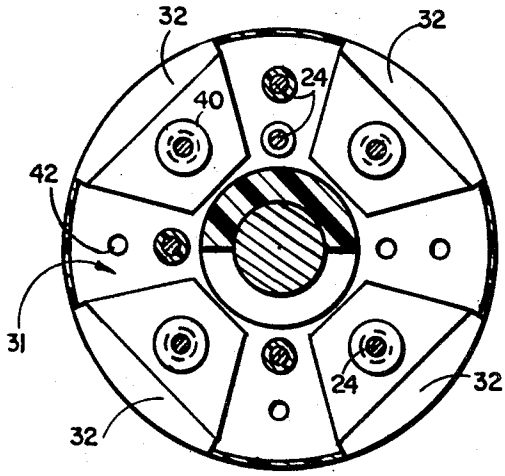

FIG. 4

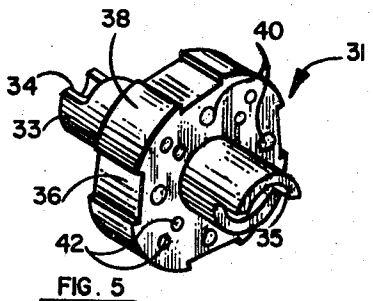

FIG. 5

INVENTOR.
ROBERT G. COOK
BY Edward Dugas
ATTORNEY

Dec. 8, 1970 R. G. COOK 3,546,657

HIGH CONTACT DENSITY UNDERWATER CONNECTOR

Filed July 29, 1968 3 Sheets-Sheet 3

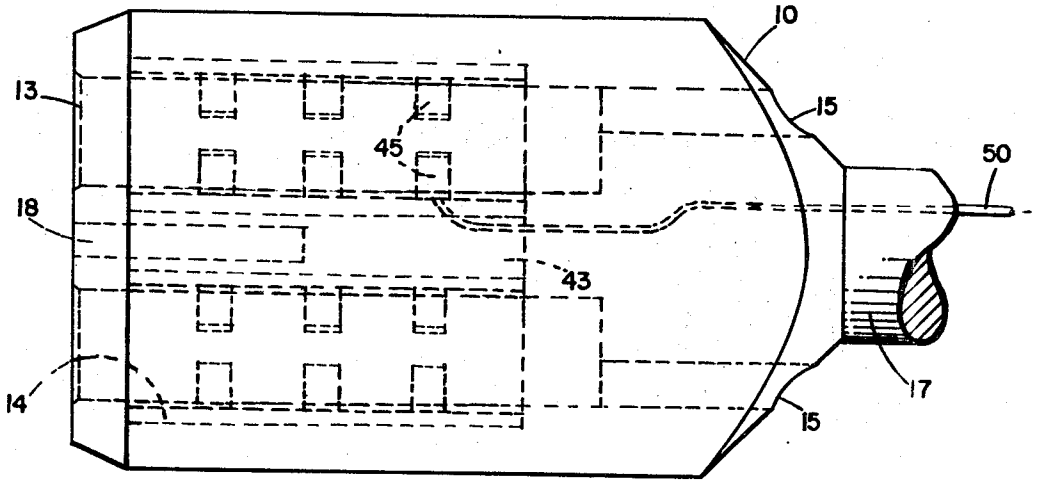

FIG. 6

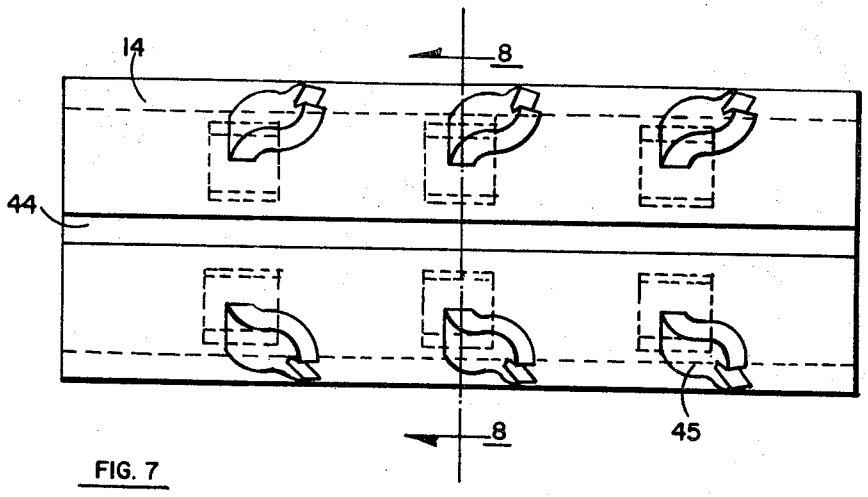

FIG. 7

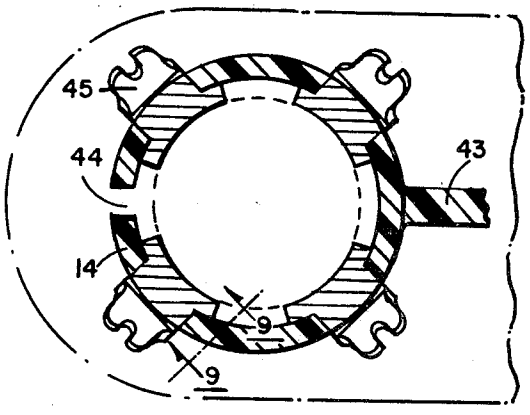

FIG. 8

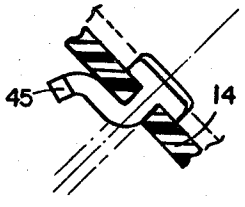

FIG. 9

INVENTOR.
ROBERT G. COOK
BY Edward Dugas
ATTORNEY

United States Patent Office 3,546,657 Patented Dec. 8, 1970

3,546,657

HIGH CONTACT DENSITY UNDERWATER CONNECTOR

Robert G. Cook, San Pedro, Calif., assignor to North American Rockwell Corporation

Filed July 29, 1968, Ser. No. 748,522
Int. Cl. H01r 13/52
U.S. Cl. 339—60 12 Claims

ABSTRACT OF THE DISCLOSURE

The underwater electrical connector is comprised of a male and female section. The female section or connector is constructed of an insulated contact supporting tube. The metal female contacts are positioned around the inner circumference of the supporting tube in one or more axially spaced groups. The supporting tube is slotted to provide flexibility and pressure to all the contacts through an interference fit between the male and female connectors. The male connector in one embodiment is comprised of two male probes, each having positioned around its outer circumference a number of contacts corresponding in number and position to the contacts on the female connector. The end of each probe is enlarged to provide a squeegee action to remove the water from the female contacts before final electrical and mechanical connection is made.

BACKGROUND OF THE INVENTION

Considerable effort has been expended to date by the ocean sciences related industries in the development of electronic techniques suitable for acquiring basic engineering and scientific data on the world's oceans related to temperature, salinity, ocean currents, etc. In general, these techniques have been directed to putting electronic systems, such as information and automatic process control systems, in a deep-ocean environment with reliable operation and good maintainability over long time periods being of a paramount importance. Electronic equipment used under water is exposed to high pressure, moisture, electrolytic corrosion, and marine growth in addition to the usual environmental factors encountered in ground or airborne environments. The development of reliable underwater connectors with high contact densities required by complex electronic systems is a need which has not yet been satisfied by the component industry. The underwater connector problem is one involving both electrical and mechanical design. A properly designed connector will supply low impedance electrical paths, position the contacts in their proper position, form a water barrier, have sufficient contact flexibility to provide proper contact pressure, and will be subject to assembly without contact ambiguity. The two basic underwater connector configurations in most common use are the metal pin and socket and the insulated connector probe with annular contact rings. Basic sealing devices use ring seals to pressure-isolate an air chamber around the pins and sockets.

A device of interest, as displaying the state-of-the-art, is disclosed in U.S. Pat. No. 3,271,727 entitled Fluid Proof Multiple Connector by A. L. Nelson. The device of that patent provides a plug body having at least two elongated plugs extending in spaced parallel relationship with each being of substantially uniform cross-sectional area throughout substantially its length. Suitable plug contacts having surface portions exposed in substantially flush relationship respectfully with the exterior surfaces of the plugs are electrically connected within the plug body to suitable insulating wires extending from the plug body. A cooperating socket body which includes two or more elongated sockets, also of uniform cross-sectional area

corresponding substantially to the lengths and cross-sectional areas of the plugs, is positioned to receive the plugs respectively in snug relationship. These sockets include socket contacts imbedded in the interior walls and have surface portions exposed at areas intermediate to the ends of the sockets. The socket contacts are connected respectively to insulated wires extending from the socket body. The connector of this invention differs from the foregoing device in that the ends of the male connectors are enlarged slightly to accomplish a positive squeegee action with the female connector. The connector also differs in that a plurality of connecting electrodes are spaced not only around the circumference of the male and female connectors, but are also axially spaced along the male and female connectors to provide a large number of or high density of contacts.

Another device of interest is disclosed in U.S. Pat. No. 2,892,990 entitled Electrical Connector by E. F. Werndl. The connector disclosed in that patent is not specifically designed for underwater use, but it does have a vapor-proof capability. The male member of that connector has a geometric shape similar to a frusto-conical shape which engages a female member having a complementary shape. Both the male and female members are made of a compressible-type material which provides pressure for the contacts when the connectors are engaged. An additional camming means is provided to force the male connector into a greater pressure relationship with respect to the female member. In one embodiment of that invention, the connectors are not only spaced around the circumference of the male and female members, but at least one second layer of connectors is provided which is axially spaced from the first set of connectors. The angular orientation and the spacing of the connectors around the circumference thereof is fixed such that the connectors in adjacent layers are staggered between the spacing of their corresponding connectors in the other layers. In the connector device of this invention, there is a plurality of layers of electrical connectors spaced axially along the connector with a number of connectors spaced around the circumference of each of the connector sections. These connectors do not have to be staggered.

SUMMARY OF THE INVENTION

In the preferred embodiment of the underwater electrical connector, the male connector is comprised of two L-shaped stiffeners which are joined together to form a U-shaped support frame upon which a plurality of insulating disks are mounted. Metal contacts are affixed to the outer surfaces of the disks by tubular rivets with the wire connections passing through holes defined in the disks to their respective metal contacts. The male assembly is then encapsulated in elastomeric material which is shaped to provide the male probe at its ends with a slightly enlarged cross-sectional area. The female portion of the connetcor is constructed of an insulated contact supporting tube with the female metal contacts mounted in the insulated supporting tubes at positions corresponding to the male contacts in the male probe portion of the connector. The female contact support tube is slotted to provide flexibility and pressure to all the contacts. The connector wiring is placed on the outside of the support tube and soldered to the proper contacts. Two or more of these support tubes are bonded together with a spacer to maintain the proper contact orientation with respect to the male connector. The assembled parts and wiring are encapsulated in the elastomeric bonding material to provide protection and a water-tight covering.

Accordingly, it is an object of the present invention to provide and improve an underwater electrical connector.

It is another object of the present invention to provide

an underwater electrical contact which upon mating wipes the contacts free of water to provide a relatively dry connection.

It is a further object of the present invention to provide an electrical connector for use under water which efficiently connects a large number of electrical contacts together.

The aforementioned and other objects of the present invention will become more apparent when taken in conjunction with the following description and drawings, throughout which like characters indicate like parts and which drawings form a part of this application.

BRIEF DESCRIPTION OF THE DRAWINGS

FIG. 1 is a disconnected view of the male and female connectors of the present invention.

FIG. 2 is a top view of the male connector illustrated in FIG. 1 with a portion of the internal structure shown in dotted lines;

FIG. 3 is an enlarged sectional view of a portion of the male connector of FIG. 2;

FIG. 4 is a sectional view taken along the sectioning lines 4—4 of FIG. 3;

FIG. 5 is an isometric projection view of an insulator used with the male plug.

FIG. 6 is a top view of the female connector of FIG. 1 with a portion of the internal structure shown in dotted lines;

FIG. 7 is an enlarged view of a portion of the female connector of FIG. 6;

FIG. 8 is a sectioned view of the connector portion taken along the sectioning lines 8—8 of FIG. 7; and

FIG. 9 is a sectioned view of the sectioned view of FIG. 8 taken along the section lines 9—9.

BRIEF DESCRIPTION OF THE PREFERRED EMBODIMENT

In FIG. 1 there is illustrated the preferred embodiment of the electrical connector of this invention. The male connector **20** is shown in engagement relationship with respect to the female connector **10**. The male connector **20** has two male probes **11** and **12**. Although two probes are illustrated for the preferred embodiment, it is to be understood that one or more probes can be used without detracting from the scope of the invention. Wire connectors which are attached to the probes are bound together within a coating or sheeting **19** and fed through the connector **20** to respective contacts, male probes **11** and **12**. A somewhat similar arrangement is made with regards to the female connector. The electrical connectors are brought into the female connector **10** through a coated or sheeted cable **17** to engage a pair of female contact support tubes **13** and **14** to make electrical contact therewith. Two exit holes **15** communicate with the female chamber formed by female connector to allow water or other liquids to be forced out of the contact area of the male and female probe. A guide pin **16** with a corresponding receptacle **18** form an alignment means for maintaining the correct alignment between the male connector **20** and the female connector **10** under various types of bending or twisting stresses.

Referring to FIGS. 2, 3 and 4 which are enlarged views of the male connector and its associates, the male probe sections **11** and **12** are identical, so a discussion of all component parts of one will be equivalent to the complete description for both. Two L-shaped stiffeners **30** which may be made from stainless steel provide the male probes with structural stiffness. The stiffeners **30** are joined together at one end by a coupler **23** which allows a limited degree of rotation of the stiffeners about the axis of the coupler. Positioned axially along the stiffeners **30** are a plurality (three) of keyed contact supports **31**. Each of the supports is keyed with a half circle notch alternately staggered at each end to prevent rotation of the contact supports. Electrical contacts **32** are

fastened to the insulated contact supports **31** by fasteners **40** which may be tubular rivets. The contacts are positioned at 90-degree intervals around the outside of the insulating supports. A plurality of holes **42** are passed through insulating support between the contact positions to allow feed-through wires to pass on through to connectors located at or further down the axial length of the stiffeners.

Referring to FIG. 5, the insulated contact support **31** is illustrated in projection view comprised of a hollow cylindrical core-center **33** which has segments of its end sections alternately removed to form locking keys **34** and **35**. Recessed sections **36** are positioned at a 90-degree interval around a disk-like member **38** which extends perpendicular from the cylindrical center-core member **33**. A plurality of openings **40** and **42** pass through the disk-like member for purposes of providing mounting surfaces for the segmented contacts **32** and to provide passageways respectively for the electrical connecting wires. The recessed sections **36** form a locking channel for the contacts **32** to prevent them from rotating with respect to the disk member **38** and they are shallow enough such that the contacts project outwards an amount equivalent to the thickness of the insulated flexible coating such that the surface of the electrical contact is flush with the surface of the elastomeric material used to encapsulate the probe. The stiffeners **30** shown in the preceding figures are provided with a projection **39** which mates with the locking key **34** in the insulating member to prevent its axial rotation about the stiffener **30**.

Referring now to FIGS. 6, 7 and 8, wherein the female connector is shown, two flexible non-conductors contact support tubes **13** and **14** are joined together by a spacer **43**. The spacer maintains the tubes a distance apart which corresponds to the spacing of the male probles **11** and **12**. The contact support tube **14** is identical to the contact support tube **13** so a discussion of all component parts of one will be equivalent to the complete description for both. The unstressed inside diameter of the support tubes with contacts installed is slightly less than the outside diameter of the male probes **11** and **12** with contacts installed. A slot **44** is provided along the entire longitudinal axis of one side of each of the conductor support tubes to allow the tubes to expand with the insertion of a male probe. Positioned through the walls of the support tubes is a plurality of electrical contacting surfaces **45** having a contour which corresponds to the outer contour of the male probe. Each of the contacts along one diameter of the supporting tube are positioned 90 degrees with respect to each other to correspond to the positioning of the complementary contacts on the male probes. Axially spaced along the length of the supporting tube are additional contacts spaced to correspond to the positioning of complementary contacts on the male probes. A single wire **50** is shown connected to one of the contacts **45** from outside the contact support tube **13**. All of the remaining electrical connections are made in a similar manner; therefore, for the purpose of simplicity, only one electrical wire connection is shown. The female electrical contacts **45** may be inserted through the non-conductive contact support tubes and crimped into place to provide a relatively rigid contact surface such as is shown in FIG. 9. Various other means may be used to fasten the contacts to the insulated supporting tubes but this particular method has been found to be most satisfactory. With all electrical wiring completed to the contacts **45**, the female probe assembly is potted in an elastomeric material to achieve the desired shape. Tunnel-type openings **15** pass from one end of each of the female receptacles out of the plug body area to enable water that may be collected in a female portion of the connectors to be forced out by the squeegee operation of the male probes. A recessed opening **18** is provided for the alignment pin **16** on the male probe. The wires **50** may be shielded and encapsulated to form a smooth finish wire bundle **17**.

While there has been shown what is considered to be the preferred embodiment of the invention, it will be manifest that many changes and modifications may be made therein, without departing from the essential spirit of the invention. It is intended, therefore, in the annexed claims, to cover all such changes and modifications that may fall within the true scope of the invention.

What is claimed is:

1. An electrical connector for use under water comprising in combination:
   - a female member of substantially uniform cross-sectional dimension throughout its length;
   - a male member of substantially uniform cross-sectional dimension except at its insertion end where its cross-sectional dimension is greater; and
   - at least one first electrical contact embedded in said male member and having a portion exposed;
   - said female member comprising:
   - an elongated tube having a slot extending along its longitudinal direction to allow said tube to expand upon receipt of said male member;
   - at least one second electrical contact protruding through the wall of said tube, and
   - an elastomeric material encapsulating the interior of said tube and a portion of said second contact to form a smooth interior surface with said substantially uniform cross-sectional dimension.

2. The invention according to claim 1 wherein said first and second electrical contacts are positioned around and also along said male and female members respectively.

3. The invention according to claim 1 wherein said female member is provided with an opening at its end to provide an egress path for water as said male member is received in said female member.

4. The invention according to claim 1 and further comprising:
   - (a) an alignment pin attached to said male member; and
   - (b) a pin receiving opening attached to said female member to maintain alignment of said members.

5. The invention according to claim 1 wherein said male member is comprised of:
   - (a) a stiffener member;
   - (b) a plurality of insulated disks axially supported along said stiffener member;
   - (c) said electrical contacts mounted on the periphery of said insulated disks; and
   - (d) elastomeric material surrounding said stiffener, said insulated disks, and portions of said electrical contacts.

6. The invention according to claim 5 and further comprising:
   - (a) at least one additional male and female member;
   - (b) coupling means coupling the stiffener members of said male members together for limited freedom of movement therebetween.

7. The invention according to claim 5 wherein said insulated disks have key means which interlock said disks with each other and with said stiffener member to prevent rotation of said disks around said stiffener member.

8. An underwater electrical connector for enabling connection and disconnection of at least two insulated wires comprising in combination:
   - a pair of L-shaped strength members joined to form a U-shaped member;

   - a plurality of insulating disks mounted on the arms of said U-shaped member and axially spaced from each other, said disks having openings defined therethrough;
   - a plurality of first electrical contacts mounted on the periphery of said insulated disks, a first set of insulated wires passing through said openings and connected to respective first electrical contacts;
   - an elastomeric material encapsulating a said insulating disk, said strength members and a portion of said first electrical contacts, said encapsulating material having a substantially uniform cross-section dimension with respect to said strength members, except at the open ends of said U-shaped member where said dimension is greater;
   - a pair of elongated contact support tubes with contacts having uniform inside diameter slightly less than the cross-section dimension of said encapsulated insulating disks with contacts;
   - a plurality of second electrical contacts mounted through said contact support tubes in positions corresponding to the first contacts on said insulating disks, a second set of insulating wires electrically connected to said second electrical contacts; and
   - an elastomeric material encapsulating said support tubes and a portion of said second electrical contacts, said support tubes held in correct alignment relation to receive said U-shaped member by said encapsulating material to facilitate the electrical connection of said first set of wires to said second set.

9. The invention according to claim 8 and further comprising:
   - (a) openings through said encapsulating material to the ends of said support tubes to allow egress of water from said support tubes.

10. The invention according to claim 8 and further comprising:
   - (a) indexing means affixed to said U-shaped encapsulated structure and to said encapsulated support tube structure for aligning said support tubes with respect to said U-shaped member.

11. The invention according to claim 8 wherein said contact support tubes are slit along their longitudinal axis to allow said tubes to expand upon receipt of said U-shaped member.

12. The invention according to claim 8 wherein each of said insulating disks are keyed to interlock with each other and said U-shaped member to prevent rotation of said disks.

References Cited

UNITED STATES PATENTS

2,499,825	3/1950	Havlicek	339—63
3,077,523	2/1963	Clewes	200—51.12
3,078,433	2/1963	Sheesley	339—62
3,277,424	10/1966	Nelson	339—94
3,289,149	11/1966	Pawloski	339—183
3,397,378	8/1968	Dietrich	339—60M

MARVIN A. CHAMPION, Primary Examiner

J. H. McGLYNN, Assistant Examiner

U.S. Cl. X.R.

339—117, 182