K. A. SIMMON.

TERMINAL CLAMP.

APPLICATION FILED MAR. 3, 1914.

1,196,163. Patented Aug. 29, 1916.

Fig. 1.

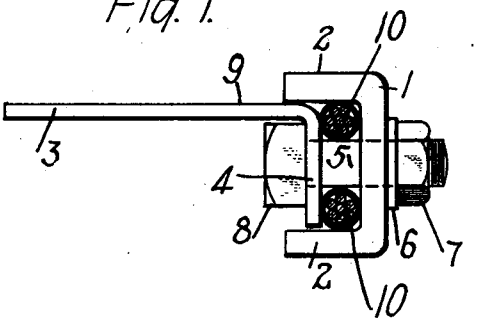

Fig. 2.

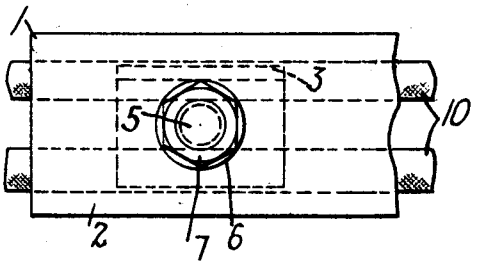

Fig. 3.

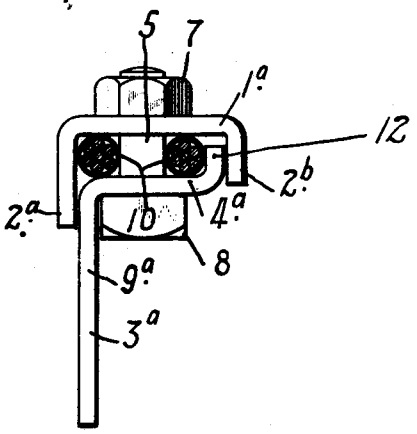

Fig. 4.

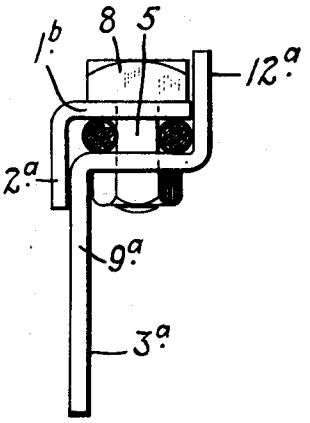

WITNESSES:

INVENTOR

Karl A. Simmon

BY

ATTORNEY

UNITED STATES PATENT OFFICE.

KARL A. SIMMON, OF WILKINSBURG, PENNSYLVANIA, ASSIGNOR TO WESTINGHOUSE ELECTRIC AND MANUFACTURING COMPANY, A CORPORATION OF PENNSYLVANIA.

TERMINAL CLAMP.

1,196,163. Specification of Letters Patent. Patented Aug. 29, 1916.

Application filed March 3, 1914. Serial No. 822,196.

To all whom it may concern:

Be it known that I, KARL A. SIMMON, a citizen of the United States, and a resident of Wilkinsburg, in the county of Allegheny and State of Pennsylvania, have invented a new and useful Improvement in Terminal Clamps, of which the following is a specification.

My invention relates to clamping devices for wires or cables, and it has particular reference to such clamps as are adapted to support and secure stranded electrical conductors and cables in position.

The object of my invention is to provide a simple and inexpensive structure of the above indicated character which may be readily assembled and manipulated and which shall effectively perform its intended functions.

Another object of my invention is to provide a device of this general class which shall embody means to restrain lateral movement of the cables and prevent them from being squeezed out of shape, and, further, to provide adequate means for locking the parts in position to prevent relative turning movements.

In the accompanying drawing, Figure 1 is a view, partially in section and partially in side elevation, of a device constructed in accordance with my invention. Fig. 2 is a view in end elevation of my invention, Fig. 3 is a view, similar to Fig. 1, of a modified form of my invention, and Fig. 4 is a view similar to Fig. 3, of a still further modification of my invention.

Referring to Fig. 1 of the drawing, the device shown comprises a channel member 1 having substantially parallel side arms 2, and an angle member 3 provided with an arm 4 which is disposed in parallel relation to the main body portion of the channel member 1 and is interposed between the channel arms 2 in such manner as to prevent relative turning movement between the coöperating members.

A bolt 5 projects through openings in the arm 4 and the body portion of the channel member 1, and its outer end is provided with a suitable washer 6 and a nut 7. The bolt 5 has a head 8 which is so disposed as to engage an arm 9 which forms an integral portion of the angle member 3, whereby turning movement of the bolt 5 is prevented.

As shown, cables 10 are located between the coöperating angle and channel members 3 and 1, and on the respective sides of the bolt 5, and it is obvious that said cables may be firmly fastened or clamped in position by turning the nut 7 in the usual manner.

Reference may now be had to Fig. 3 in which the angle member 3^a is provided with an extension 12 which is substantially parallel to the arm 9^a and thus forms a member of substantially Z-shape. The channel member 1^a has its arm 2^a materially longer than its other parallel arm 2^b, and said arm 2^a projects downwardly and engages the arm 9^a of the angle member 3^a. The other arm 2^b projects downwardly on the outside of the extension 12, and, in this manner, relative movement between the two members is prevented, while the conductors or wires 10 are restrained against lateral movement.

The bolt 5 projects through both of the members 1^a and 4^a and has its head 8 in engagement with the arm 9^a to prevent turning thereof. A nut 7 is provided to coöperate with the bolt 5.

In Fig. 4 the device shown is similar to that shown in Fig. 3, but the angle member 3^a is provided with an extension 12^a which is of somewhat greater length, while the coöperating clamping member 1^b has but a single arm 2^a which engages the side of the arm 9^a for preventing relative movement between the members. The bolt 5 has its head 8 in engagement with the extension 12^a and a nut 7 coöperates with the lower end of the bolt.

The angle members 3 and 3^a are provided for attaching the terminal members to electrical devices (not shown). The arms 9 and 9^a may be either soldered to the electrical devices or clamped thereto by any of the well known methods.

I do not wish to be restricted to the specific structural details and arrangement and location of parts, set forth, as many modifications therein may be effected without departing from the spirit and scope of my invention, and such modifications are intended to be covered by the appended claims.

I claim as my invention:

1. A clamping device comprising an angle member having two arms, a channel member adapted to straddle the said arms, and a bolt adapted to project through the said members and having its head re-

strained in position by one of the arms of the said angle member.

2. A clamping device comprising a channel member having side arms, an angle member having a plurality of arms, one of the arms being disposed in parallel relation to the middle portion of the said channel member and between the side arms thereof, and a bolt adapted to coöperate with the said angle member and the said channel member, the head of the said bolt being locked in position by an arm of the said angle member having parallel relation with the side arms of the said channel member.

3. A clamping device comprising a main member of Z-shape and a coöperating member of U-shape adapted to grip a conductor, said members being adapted to prevent lateral movement of the conductor, and a bolt for clamping the said members together and having its head restrained in one position by one of the end portions of the Z-shaped member.

4. A clamping device comprising a main member of Z-shape and a coöperating angle member adapted to grip a wire or cable, said members being adapted to prevent lateral movement of the wire or cable, and a bolt for clamping said members together and having its head restrained from turning by engagement with one of the end portions of said Z member.

5. A clamping device comprising a channel member having parallel side arms, a coöperating Z-shaped member disposed between said arms and adapted to prevent a turning movement of said channel member, and a bolt engaging said coöperating members and having a side of its head in engagement with one arm of the said Z-shaped member to prevent turning of the bolt.

In testimony whereof, I have hereunto subscribed my name this 27th day of Feb. 1914.

KARL A. SIMMON.

Witnesses:
EARL M. BILL,
B. B. HINES.