Dec. 22, 1942. K. DIETRICH 2,305,763

TYPEWRITING DEVICE

Filed Dec. 9, 1940 2 Sheets-Sheet 1

Fig. 1

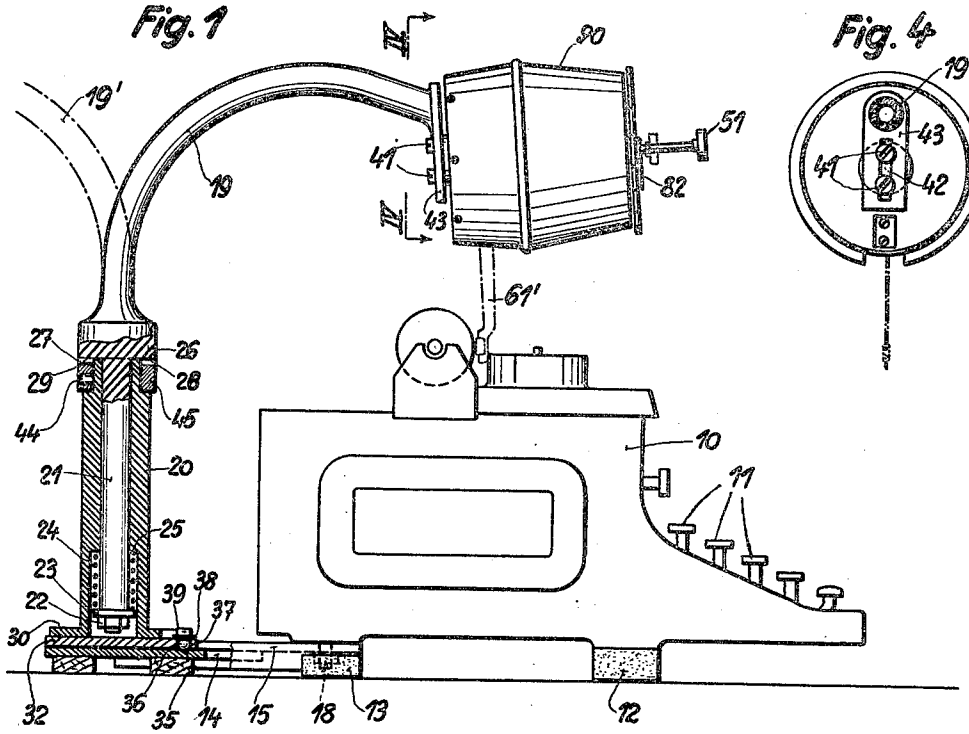

Fig. 4

Fig. 2

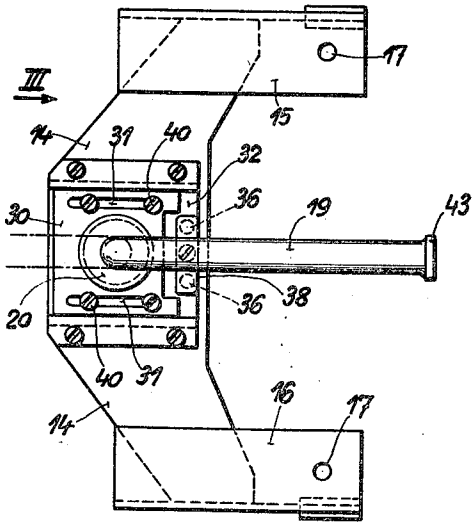

Fig. 3

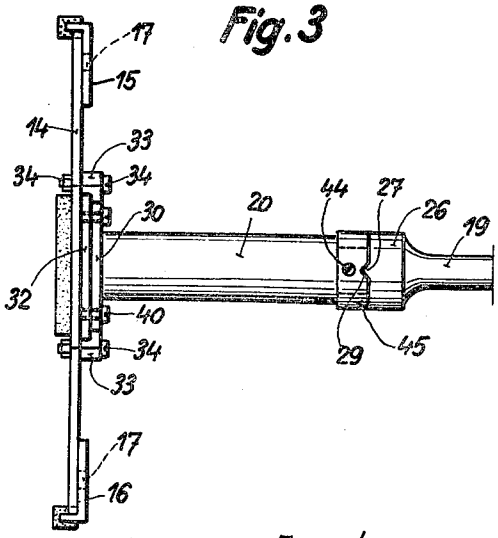

Inventor:
Karl Dietrich
by Frank S. Ackerman, attorney

Dec. 22, 1942. K. DIETRICH 2,305,763

TYPEWRITING DEVICE

Filed Dec. 9, 1940 2 Sheets-Sheet 2

Fig. 5

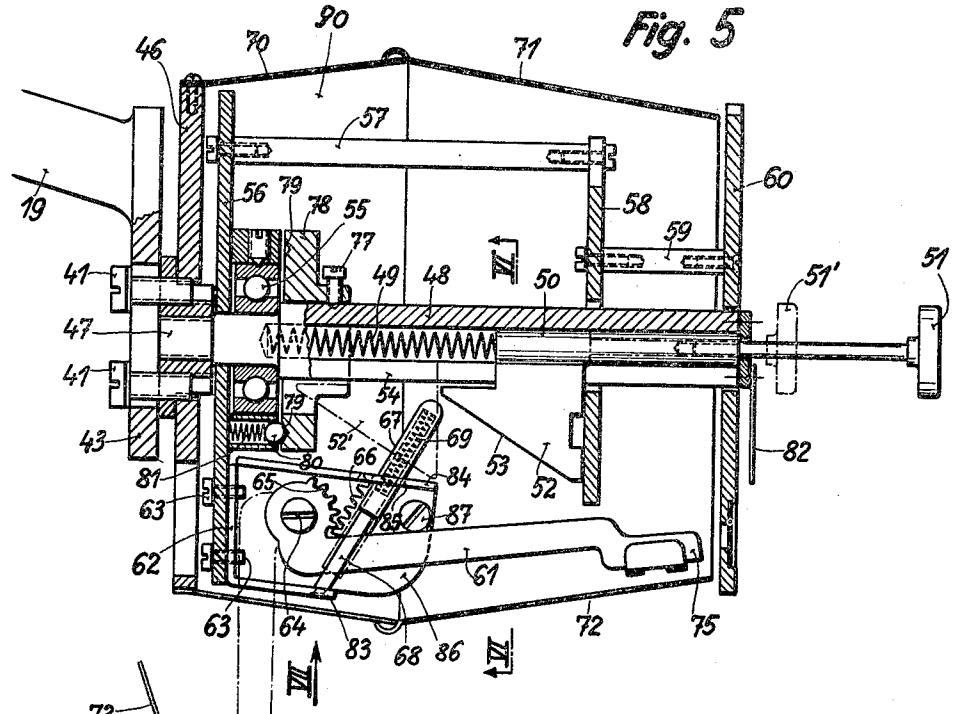

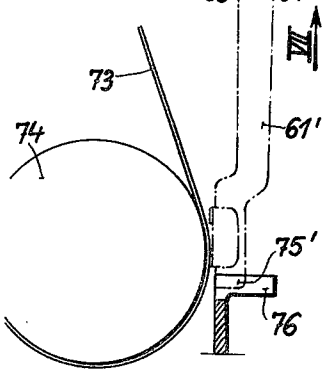

Fig. 6

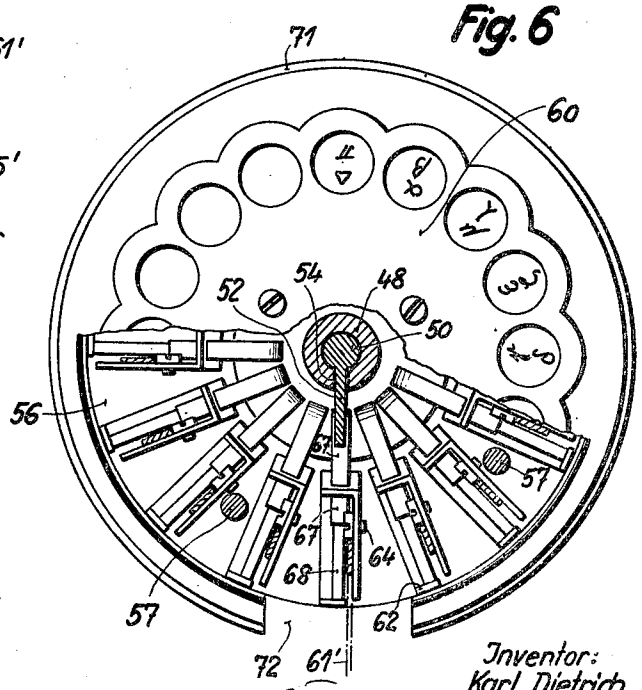

Fig. 7

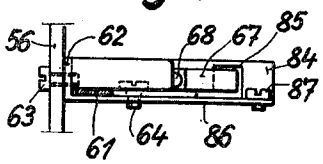

Inventor:
Karl Dietrich
by Frank A. Appleman attorney

Patented Dec. 22, 1942

2,305,763

UNITED STATES PATENT OFFICE

2,305,763

TYPEWRITING DEVICE

Karl Dietrich, Hanover, Germany; vested in the Alien Property Custodian

Application December 9, 1940, Serial No. 369,333
In Germany March 23, 1939

4 Claims. (Cl. 197—1)

The object of the invention is a device for writing of characters which are not comprised in ordinary writing. Such characters are, in particular, Greek letters, types for mathematical formulae, for foreign currency, etc. The invention is based upon the idea of providing a supplementary device for typewriters which can be easily attended, is always ready for use, and can be disconnected by one single manipulation, besides, having a simple construction as well as a low price. It also is a feature of the invention that the supplementary device can be used for typewriters of different make, thus without regard to whether the dimensions of the typewriter are larger or smaller.

In the accompanying drawings is

Fig. 1 a side view, partly the section through a typewriter of usual construction and, attached to it, the supplementary device for typing of characters not comprised in ordinary writing;

Fig. 2 the plan view of a part of the supplementary device;

Fig. 3 a view in the direction of the arrow III of Fig. 2;

Fig. 4 a section to the line IV—IV of Fig. 1;

Fig. 5 an enlarged central section through the supplementary device;

Fig. 6 is a front view, partly the section to the line VI—VI of Fig. 5;

Fig. 7 the view of a part of the supplementary device in the direction of the arrow VII of Fig. 5.

A typewriter 10 with a key-board 11 of the generally used design has the front feet 12 and the rear feet 13. To the rear feet 13, a bearing block 14 is attached through the fundamental plates 15, 16 of which have holes 17 through which the bolts 18 of the rear feet 13 of the typewriter are inserted. Upon the bearing block 14, reposes the arm 19 having a basket 90 with type bars provided with characters which do not appear in ordinary writing, f. i.: α, β, γ, δ, ϵ, ζ, μ, λ, Δ, π.

The arm 19 is revoluble in the column 20. A pin 21 of the arm 19 has, at its lower end, a nut 22 and a washer 23. A pressure spring 24 is, at its one end, in contact with the washer 23 and, at its other end, with a shoulder 25 of the column 20. The arm 19 is, at the point of its transition towards the pin 21, enlarged as to form the ring 26 which is carried by the upper front face of the column 20. The ring 26 has the nose 27. The column 20 comprises, at its front face, a revolving ring 45 to be tightened by means of the screw 44, this ring having two diametrically opposel notches 28, 29 into which the nose 27 is adapted to engage. The notches 28, 29 serve to fix the arm 19 in the workilng positino 19 or in the position of rest 19' of Fig. 1. The column 20 ends below in the plate 30 which comprises the slots 31. Below the plate 30 is a further plate 32 which is supported by the bearing block 14. The guide rails 33 are fastened to the bearing block 14 by means of the screws 34. The rails 33 serve to guide the plate 32 which can be shifted from the left to the right and vice versa according to Figs. 1 and 2. Within the bearing block 14, the conical recesses 35 are arranged into which the balls 36 are adapted to enter; the latter are movable vertically within bores 37 of the plate 32 and are loaded by a platform-spring 38 which is fastened to the plate 32 by the screws 39. In the position according to Figs. 1 and 2, the plate 32 is, consequently, fixed on the bearing block 14 by the spring-loaded balls 36 which engage the recesses 35 in a spring-suspended manner. In spite thereof, the plate 32 can be shifted, however, a certain force is required to do so. The plate 30 of the column 20 can be rigidly attached to the plate 32 by the screws 40 by means of which the plates 30 and 32 can be tightened together. It emanates herefrom that the supplementary device which consists of the basket 90, the arm 19 and the column 20, can be removed by the user of the typewriter by a backward pressure. If the supplementary device is to remain temporarily out of action, it can also be wheeled backwards by turning the arm 19 with the pin 21 in the column 20, whereby the nose 27 disengages the recess 29 and, after a turning of 180°, enters the recess 28.

The height of the basket 90 can be adjusted in relation to the typewriter 10. This purpose is met by the fastening of the basket 90 on the arm 19 by means of the screws 41 which are screwed into the basket 90 and pierce through the slot 42 of a tongue 43 wherein the arm 19 ends.

The basket 90 has the bottom 46 into which the pin 47 of a hollow column 48 is screwed. Within the column is a pressure spring 49 tending to press outwardly the key 50 sliding within the column 48. The key 50 ends in a disc 51 which, when touching a type bar, is operated by a finger. When pressing upon the disc 51, the latter reaches the position 51', the spring 49 being compressed. The key 50 is provided with the lateral ledge 52 having a slant face 53. The column 48 comprises a slot 54 which allows the ledge 52 to be displaced up to the position 52' when pressure is exerted upon the disc 51.

Upon the column 48, is the ball bearing 55

carrying the disc 56 to which a selective disc 60 is rigidly connected by means of the stays 57, the intermediate disc 58, and the stays 59. Upon the selective disc, the characters are marked which can be written by means of the supplementary device 90, f. i.: α, β, γ, δ, ϵ, ζ, μ, λ, Δ, π. Upon the disc 56, a number of type bars 61 are arranged star-shaped in such a manner that the type bars can be slewed in radial planes. One type bar 61 each is supported by a block 62. All blocks 62 are fixed to the disc 56 by means of screws 63. The type bar 61 to be seen in Fig. 5 is revoluble upon the pin 64. Each type bar comprises a toothed wheel segment 65 engaging the toothed rack 66. The latter is fastened to a sleeve 67 adapted to slide upon a bolt 68 which is rigid within the block 62. The sleeve 67 contains a pressure spring 69 tending to remove the sleeve 67 from the bolt 68, i. e. to turn the type bar 61 in a sense opposite to that of a watch hand. The slant face 53 of the ledge 52 on the key 50 is adapted to displace one of the sleeves 67 upon the pins 68, that way that the toothed rack 66 fastened to the sleeve 67 turns the type bar 61 in the sense of a watch hand. As the key 50 cannot be turned and, consequently, the ledge 52 is always below, always that type bar 61 which is just below will be slewed into the position 61' by the ledge 52. As to which type bar is caused to touch, this depends upon the position of the disc 56 which can be turned to one's liking by means of the selective disc 60. A hand 82 is fixed to the column 48 in order to facilitate the selection. The above described parts of the supplementary device 90 are surrounded by a casing in two parts 70, 71 which, in its lower part, has a slot 72 through which the type bars 61 can protrude in outward direction so that the type bars 61' touch the paper 73 upon the typewriter platen 74. The type bars 61 comprise, at their outer end, a prolongation 75. When touching the type bar, this prolongation enters the guide 76 with which typewriters are ordinarily provided to guide the normal type bars.

In order to assure that the type bars 61 exactly enter the prescribed touching position, the hereafter described stop device is provided. Upon the column 48, by means of the screw 77, the disc 78 is fixed having notches 79 the number of which is equal to the number of type bars 61. The ball 80 is displaced with the revolving disc 56 which ball is loaded by the pressure spring 81. The ball 80 always catches into one notch 79 when one of the type bars 61 is exactly in the touching position.

The bolt 68 is fastened in the block 62 at 83. A bore 85 guiding the sleeve 67 is in the flange 84 of the block. The cap-screw 87 is screwed into the stay 86 of the block 62. This screw serves as a stop to limit the movement of the type bar 61.

I claim:

1. The combination of a typewriter having a platen carriage and a platen mounted therein, a cylindrical basket revolving around a horizontal axis and arranged above the platen carriage of the typewriter, said basket comprising type bars having characters different from those of the typewriter, the type bars being radially arranged in the basket, a key centrally arranged in the basket, and means operatively connected to the key to cause the lowest type bar to be moved to strike the platen in printing position.

2. The combination of a typewriter having a platen carriage and a platen mounted therein, a cylindrical basket revolving around a horizontal axis and arranged above the platen carriage of the typewriter, said basket comprising type bars having characters different from those of the typewriter, the type bars being radially arranged in the basket, a key centrally arranged in the basket, and means operatively connected to the key to cause the lowest type bar to be moved to strike the platen in printing position, the basket being attached to an arm which is adapted to be wheeled around a vertical axis behind the typewriter.

3. The combination of a typewriter having a platen carriage and a platen mounted therein, a cylindrical basket revolving around a horizontal axis and arranged above the platen carriage of the typewriter, said basket comprising type bars having characters different from those of the typewriter, the type bars being radially arranged in the basket, a key centrally arranged in the basket, and means operatively connected to the key to cause the lowest type bar to be moved to strike the platen in printing position, the basket being attached to an arm which is adapted to be wheeled around a vertical axis behind the typewriter, and the height position of which is adjustable in relation to the said arm, the arm having a horizontal adjustability and being fastened upon a base plate which is rigidly fixed to the feet of the typewriter.

4. The combination of a typewriter having a platen carriage and a platen mounted therein, a cylindrical basket revolving around a horizontal axis and arranged above the platen carriage of the typewriter, said basket comprising type bars having characters different from those of the typewriter, the type bars being radially arranged in the basket, a key centrally arranged in the basket, and means operatively connected to the key to cause the lowest type bar to be moved to strike the platen in printing position, the type bars being elongated at their outer ends so that, upon operation of a type bar, the prolongation enters the usual guide piece which is arranged close to the printing point of the typewriter.

KARL DIETRICH.