Dec. 28, 1943. HENRI-GEORGES DOLL 2,338,029

WELL SURVEYING APPARATUS

Filed Jan. 21, 1941 2 Sheets-Sheet 1

Fig.1.

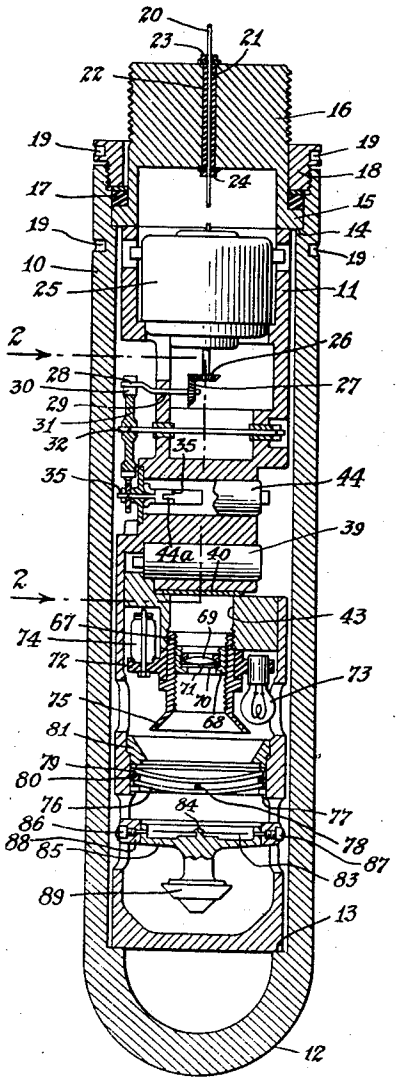

Fig.2.

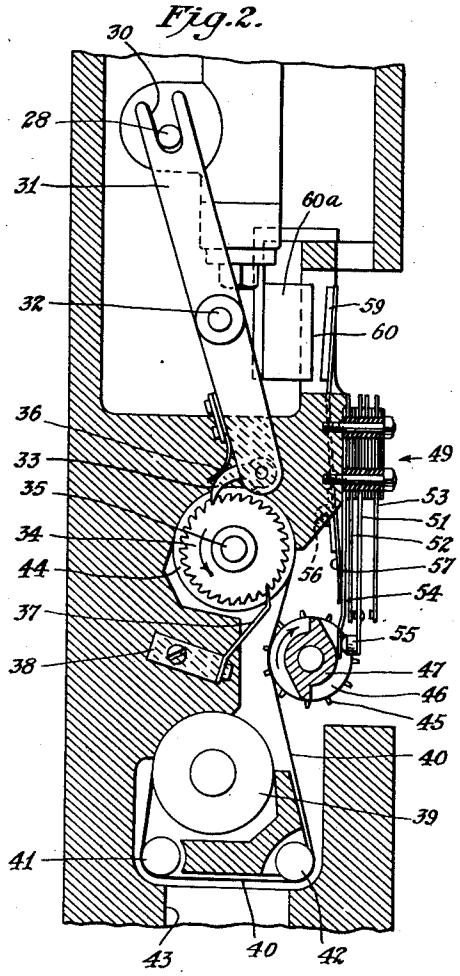

Fig.3.

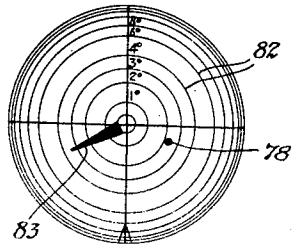

INVENTOR
Henri Georges Doll
BY
Roquet, Neary & Campbell
ATTORNEYS

Dec. 28, 1943. HENRI-GEORGES DOLL 2,338,029

WELL SURVEYING APPARATUS

Filed Jan. 21, 1941 2 Sheets-Sheet 2

Fig. 4.

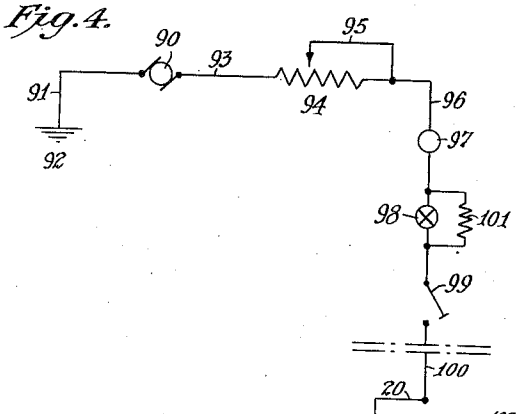

Fig. 5.

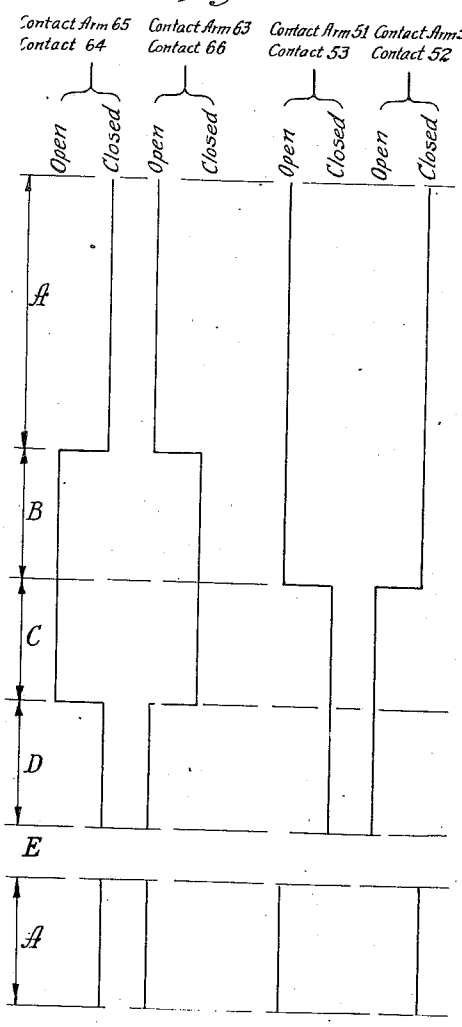

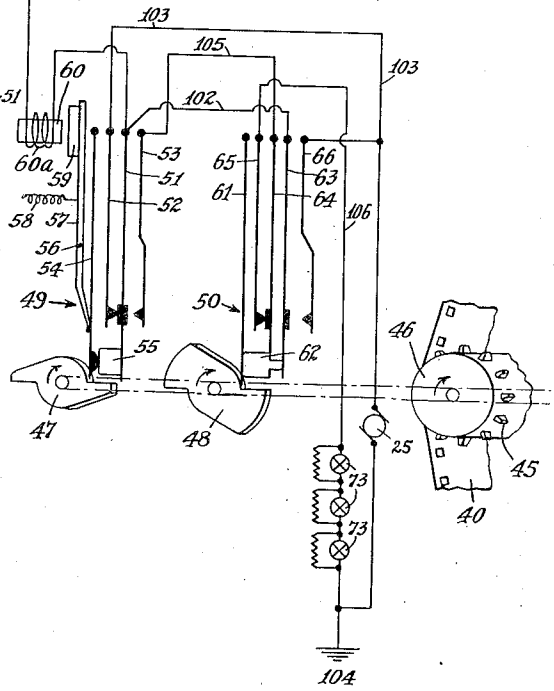

INVENTOR
Henri Georges Doll
BY
Noquet, Neary & Campbell
ATTORNEYS

Patented Dec. 28, 1943 2,338,029

UNITED STATES PATENT OFFICE

2,338,029

WELL SURVEYING APPARATUS

Henri-Georges Doll, Houston, Tex., assignor to Schlumberger Well Surveying Corporation, Houston, Tex., a corporation of Delaware

Application January 21, 1941, Serial No. 375,197

8 Claims. (Cl. 33—205.5)

The present invention relates to bore hole surveying and more particularly to means adapted to be lowered into a bore hole on an electric cable for determining the inclination of the bore hole and the direction of the inclination at any desired point or points therein.

In my copending application Serial No. 370,466 filed December 17, 1940, for "Well surveying instrument," there is disclosed apparatus for determining the inclination and direction of the inclination in bore holes. This is accomplished by lowering an instrument into the bore hole on a multi-conductor electric cable which provides mechanical strength for raising and lowering the apparatus in the bore hole and also enables complete control of the apparatus to be effected from the surface of the earth.

The present invention is addressed to somewhat analogous apparatus for making the same determinations when only a single electric conductor cable with or without a metallic sheath is employed.

Accordingly, it is an object of this invention to provide an apparatus for surveying bore holes in which only a single conductor cable is utilized for controlling the apparatus from the surface.

Another object of the invention is to provide a new and improved mono-conductor cable well surveying means which may be controlled from the surface of the earth without sacrificing any of the speed, accuracy or other advantages of a multi-conductor cable instrument.

The inventive idea involved is capable of being expressed in a number of different forms utilizing various electrical circuits. For purposes of illustration, however, a representative embodiment of the invention is described below in connection with the accompanying drawings in which:

Fig. 1 is a view in longitudinal section of well surveying apparatus constructed according to the present invention;

Fig. 2 is a partial view in section taken along line 2—2 of Fig. 1, looking in the direction of the arrows and illustrating more clearly the film control mechanism and the film operated switching means;

Fig. 3 is a typical record made by the instrument;

Fig. 4 is a schematic wiring diagram of the circuits employed in the apparatus shown in Figs. 1 and 2; and

Fig. 5 is a graphic representation of a complete cycle of operation of the apparatus shown in Figs. 1 and 2.

The surveying instrument comprises essentially a water tight casing made of suitable non-magnetic material which is strong enough to withstand the pressures to which it is subjected, power means for driving a light sensitive record strip, cam operated switching means actuated by the record strip, a compass, a member rolling on a surface of revolution, means for obtaining a photographic record of the positions of the compass and the rolling member and a suitable electrical control circuit.

The principle of the invention can best be understood by referring to the non-limiting embodiment illustrated in the figures. Referring to Fig. 1, the well surveying apparatus comprises a cylindrical casing 10 made of brass or other suitable material within which is disposed a frame-work 11 on which the respective elements are mounted. The lower portion of the casing 10 is rounded at 12 and is provided with a circumferential shoulder 13 on which the framework 11 is adapted to be seated.

The upper end of the casing 10 is open and it is provided with a shouldered portion 14 adapted to seat a laterally extending flange 15 formed at the lower extremity of an externally threaded headpiece 16 by means of which the instrument may be attached to an electric cable or other apparatus (not shown). In order to provide a water tight joint, a gasket 17 of rubber or other suitable material is placed over the flange 15 and a ring 18 is screwed down tightly over it into the internally threaded upper portion of the casing 10. The ring 18 and the casing 10 are provided with suitable recesses 19 for receiving spanner wrenches to assemble and dis-assemble the unit.

The circuit for controlling the well surveying instrument, which will be described in detail hereinafter, includes a conductor 20 which passes through an insulated bushing 21 disposed in a bore 22 formed in the headpiece 16. The bushing 21 is retained in position by means of the screws 23 and 24 which are threaded on the conductor 20, as shown in the figure. For the sake of clearness the electrical connections between the conductor 20 and the apparatus have not been shown in Figs. 1 and 2.

Attached to the framework 11 is an electric motor 25, on the shaft of which is mounted a gear 26 which is adapted to drive a gear 27 secured to a crank arm 28 journalled in a bearing 29 in the framework 11. The crank arm 28 is adapted to be snugly received within a U-shaped slot 30 (Fig. 2) formed at the upper extremity of an arm 31 which is pivotally mounted intermediate its ends at a point 32 on the framework 11. It will be apparent that when the motor 25 is energized to rotate the crank arm 28, the arm 31 will oscillate periodically about the pivot point 32.

At the lower end of the arm 31 is fixed a pawl 33 which is adapted to engage a ratchet wheel 34 keyed on a rotatable shaft 35 journalled in the framework 11. The pawl 33 is maintained in

yielding engagement with the ratchet wheel 34 by means of a spring 36 which is secured to the arm 31. A second spring 37 is secured to a block 38 mounted on the framework 11 which serves as a brake and permits the ratchet wheel 34 to turn in the direction of the arrow only.

Mounted in the framework 11 beneath the sprocket wheel 34 is a conventional type film can 39 containing a roll of conventional type film. From the film can 39 is drawn a film strip 40 which passes over spaced apart horizontally disposed rollers 41 and 42 located adjacent the boundary of an aperture 43 through which the inclination indicating means to be described below may be viewed. The end of the film strip 40 is inserted within a longitudinally extending slot 42a (Fig. 1) formed in the shaft 35 on which the ratchet wheel 34 is mounted and a conventional type film can 44 is mounted over the shaft 35 to receive the exposed film and protect it while the record is being removed.

The film strip 40 is provided with conventional perforations along at least one edge thereof which are adapted to be engaged by the teeth 45 on a sprocket wheel 46 rotatably mounted on the framework 11 intermediate the film cans 44 and 39. Integrally formed with the sprocket wheel 46 are a pair of adjacent cams 47 and 48 (Fig. 4) which are adapted to cooperate with a pair of switches 49 and 50, respectively, which are also mounted on the framework 11.

The switch 49 (Fig. 4) is provided with a movable spring contact arm 51 which normally engages a spring contact 52. The contact arm 51 is adapted to be moved out of engagement with the contact 52 and into engagement with a contact 53 by the cam 47 acting through a spring arm 54 and a block of insulating material 55.

Pivotally mounted at the point 56 on the framework 11 and adjacent the spring arm 54 of the switch 49 is an arm 57, one end of which is continuously maintained in yielding engagement with the spring arm 54 by means of a weak tension spring 58. The other end of the arm 57 is provided with a small button 59 made of any suitable magnetic material, near which is disposed a conventional type electromagnet 60.

The electromagnet 60 is so designed that it is not strong enough to attract the arm 57 when the latter is in the position shown in Fig. 4. When the switch 49 has been actuated, however, and the button 59 is closely adjacent to the electromagnet 60, the latter is strong enough to hold the arm 57 and keep the switch 49 in the actuated position after the cam 47 has released the spring arm 54.

The switch 50 is provided with a spring arm 61 which is adapted to be actuated by the cam 48 to move an insulating member 62 secured to a pair of adjacent contact arms 63 and 64. In the normal position of the switch 50, the contact arm 64 is in engagement with the contact 65 and the contact arm 63 is out of engagement with the contact 66. When the spring arm 61 is moved by the cam 48, the contact arm 64 is moved out of engagement with the contact 65 and the spring contact arm 63 is moved into engagement with the spring contact 66.

The lower portion of the aperture 43 is internally threaded (Fig. 1) to receive an externally threaded tubular member 67, the interior wall of which is threaded to receive an externally threaded ring 68. Within the ring 68 are mounted a lens 69 and a diaphragm 70 having a small aperture 71 formed therein. By turning the ring 68 either to the right or to the left as may be necessary, the lens 69 may be adjusted to focus the inclination indicating means which is described below on the portion of the film strip 40 disposed directly above the aperture 43.

Secured to the tubular member 67 is a radially extending flange 72 in which are mounted one or more electric lights 73 which provide the illumination necessary to light the inclination indicating means when the photographic record is being made. If the lamps 73 are series connected they should preferably be shunted by suitable resistances 74 which may also be mounted on the flange 72. The lower portion of the tubular member 67 is formed with an outwardly extending conical portion 75 which is of such size and shape as to prevent any direct illumination from the lamps 73 from impinging upon the film strip 40 or the inclination indicating means disposed below.

The means for providing indications of the inclination of the bore hole comprises a curved member 76, made of glass or other suitable material, which is seated on an inwardly extending ring 77 formed within the framework 11 and on which is disposed a freely rolling element 78, preferably a spherical steel ball. Mounted above the curved member 76 is a second curved member 79, also made of glass or other suitable material, which is spaced apart from the curved member 76 by a ring 80 made of brass, for example, such that the distance between the lower surface of the curved member 79 and the upper surface of the curved member 76 very slightly exceeds the diameter of the ball 78. The entire assembly is retained in position within the framework 11 by means of a ring 81, as shown in Fig. 1.

The lower surface of the curved member 79 and the upper surface of the curved member 76 are ground in the shape of segments of ellipsoids of evolution and the lower surface of curved member 76 is provided with etched circular rings 82 (Fig. 3) which, when viewed from the aperture 71 in the diaphragm 70, indicate the deviation of the axis of the casing 10 from the vertical for various positions of the ball 78. Whenever the axis of the casing 10 deviates from the vertical axis, the ball 78 rolls to the lowermost position on the curved member 76 and provides an accurate indication of such angular deviation.

The direction of the inclination of the bore hole is afforded by means of a magnetic compass needle 83 which is pivotally mounted at the point 84 on a member 85 located beneath and coaxially with the curved member 76. The member 85 is mounted on pivots 86 and 87 in a gimbal ring 88 which is pivotally mounted on an axis at right angles to the axis of the pivots 86 and 87. A pendulum 89 is secured to the member 85 below the pivot 84 in such fashion that the compass needle 83 is maintained in a horizontal plane at all times. To assist in differentiating between the north and south ends of the compass needle 83, one end may be painted white and the other end black.

In Fig. 3 is shown a typical record of the inclination and the direction of the inclination made by the instrument. The position of the ball 78 with respect to the circular graduations 82 indicates accurately the angular deviation of the axis of the casing 10 from the vertical axis, and the position of the ball 78 with respect to the compass needle 83 indicates the direction of the inclination with respect to the magnetic north pole.

Fig. 4 is a schematic wiring diagram of a circuit employed when a single conductor cable is used to raise and lower the instrument in a bore hole. The portion above the break represents the surface equipment while that below the break represents the circuit of the apparatus lowered into the bore hole. Referring to Fig. 4, the circuit includes a source of voltage 90 which may be a direct current generator of about 110 volts, for example, one terminal of which is connected through a conductor 91 to ground 92. In such case, the earth provides a current path to complete the circuit. If desired, the cable on which the apparatus is suspended in the bore hole may be provided with a metallic sheath which may be used as a ground instead of the earth. If a second conductor is available in the cable, it may also be used as a ground. An alternating current source, a converter, or a battery may be employed instead of the direct current generator 90, if desired.

The other terminal of the source of voltage 90 is connected through a conductor 93 to one terminal of a variable resistance 94. The other end of the resistance 94 and the variable contact 95 thereof are connected together and through a conductor 96, an ammeter 97, a pilot light 98 and a switch 99 to the single conductor 100 in the cable (not shown) on which the apparatus is suspended in a bore hole. The pilot light 98 may be shunted by means of a suitable fixed or variable resistance 101.

The lower end of the single conductor 100 in the supporting cable is connected to the conductor 20 in the casing 10. The conductor 20 is connected to one terminal of the winding 60a on the electromagnet 60, the other terminal of which is connected by means of a conductor 102 to the contact arms 51 and 63 on the switches 49 and 50 respectively. The contact 52 on switch 49 is connected through a conductor 103 to the contact 66 on the switch 50 and also to one terminal of the electric motor 25, the other terminal of which is grounded to the casing 10 at the point 104. The contact 53 on the switch 49 is connected through a conductor 105 to the contact arm 64 on the switch 50 and the contact 65 of the switch 50 is connected through a conductor 106 and through the lamps 73 to the ground point 104 on the casing 10.

In order to make a well survey with the apparatus described above, the framework 11 is removed from the casing 10 before the apparatus is lowered into the bore hole and film with perforations along one or both edges such as, for example 35 mm. motion picture film is placed in the film can 39. The film can 39 is then placed in the framework 11 and the leading end of the film strip 40 is pulled over the rollers 41 and 42, under the sprocket wheel 46 such that the teeth 45 enter the perforations thereof and into the receiving film can 44 where it is inserted into the slot 44a formed in the shaft 35.

The shaft 35 is then given several turns to check the alignment of the film strip 40 and to ascertain if the mechanism is operating properly. The framework 11 and all the parts attached thereto are then inserted in the outer casing 10, the necessary electrical connections are made, the headpiece 16 and the gasket 17 are placed into position and the ring 18 is tightly screwed down by means of a spanner wrench, providing a hermetical seal. An electrical cable (not shown) is then attached in any conventional manner to the externally threaded headpiece 16, electrical connections being made between the conductor 20 and the corresponding conductor 100 (Fig. 4) in the cable.

For the sake of accuracy, a long non-magnetic sinker with or without centering guides is rigidly attached above or below the well surveying instrument, but as this plays no part in the operation of the surveying instrument it is not shown in the drawings. The apparatus is then lowered to the desired depth in the bore hole where it is brought to rest, or as is more customary, if possible, it is lowered below the desired depth and then pulled up slowly to the desired depth.

It will be assumed that at that instant the switch 99 is open and the positions of the cams 47 and 48 are as shown in Fig. 4. If it is now desired to obtain indications of the inclination of the well at that depth, the switch 99 is closed, completing a circuit from the ground 92 at the surface, the source of voltage 90, the conductor 93, the variable resistor 94, the conductor 96, ammeter 97, pilot light 98, switch 99, conductor 100 in the supporting cable, conductor 20, the winding 60a of the electromagnet 60, the contact arm 51 on switch 49 engaging contact 52, conductor 103, the motor 25, the ground 104 on the casing 10, and through the liquid contained in the bore hole and the surrounding earth formations.

The motor 25 is now energized and it proceeds to pull the film strip 40 from the film can 39 over the rollers 41 and 42. The resistance of the circuit described above is so chosen that the motor 25 draws about 300 milliamperes and the pilot light burns dimly, indicating that the film strip 40 is being moved. The lights 73 are out.

The displacement of the film strip 40 rotates the sprocket wheel 46, at the same time rotating the cams 47 and 48 in the directions indicated by the arrows. As shown in Fig. 4, the shapes and settings of the cams 47 and 48 is such that their sudden falls occur approximately simultaneously, but the recovery of the cam 48 precedes that of the cam 47 so that the contact arm 63 on the switch 50 engages the contact 66 before the contact arm 51 on the switch 49 disengages the contact 52.

After the period of time represented by the length A on Fig. 5 has elapsed, the cam 48 acting through the spring arm 61 and the insulating member 62, will have moved the contact arm 64 on the switch 50 out of engagement with the contact 65 and the contact arm 63 into engagement with the contact 66. This completes a circuit from the conductor 102 through the contact arm 63 engaging contact 66 on the switch 50 to the motor 25, so that the latter remains energized regardless of what happens to the switch 49.

A short time B later (Fig. 5), the cam 47, acting through the spring arm 54 and the insulating member 55 on the switch 49, moves the contact arm 51 out of engagement with the contact 52 and into engagement with the contact 53. It will be noted that although the contact 52 is out of engagement with the contact arm 51, the motor 25 remains energized because the contact arm 63 on the switch 50 is in engagement with the contact 66.

The movement of the spring arm 54 on the switch 49 is followed by the arm 57 which is turned about its pivot 56 by the tension spring 58, thereby bringing the magnetic button 59 thereon into proximity with the core of the electromagnet 60. As indicated above, the electromagnet 60 is so designed that it is strong enough in this position to retain the spring arm 54 and

the contacts on the switch 49 in the actuated position after the cam 47 has become disengaged from the spring arm 54.

After the time interval C (Fig. 5) has elapsed and the cams 47 and 48 have rotated through an angle of slightly more than 180°, the spring arm 61 on the switch 50 will be suddenly released, so that contact arm 63 disengages the contact 66 and the contact arm 64 engages the contact arm 65. However, the spring arm 54 on the switch 49 will be retained in its former position by the electromagnet 60 acting on the button 59 which is secured to the arm 57.

For this position of the switches 49 and 50 there is a circuit from the wire 20, through the winding 60a of the electromagnet 60, contact arm 51 engaging contact 53 on switch 49, conductor 105, contact arm 64 engaging contact 65 on switch 50, conductor 106 and the lamps 73 in the housing 10, to the ground point 104, thus impressing voltage from the source 90 on the lamps 73 and causing them to burn brightly. The circuit constants are so chosen that under these conditions pilot light 98 on the surface of the earth also burns brightly, indicating that the lamps 73 are illuminated.

As soon as the pilot light 98 begins to burn brightly, the operator at the surface starts to keep track of the time and when a sufficient period of time D (Fig. 5) has elapsed to expose the film strip 40 properly, the switch 99 at the surface of the earth is opened. This de-energizes the magnet 60 permitting the respective contacts on the switch 49 to return to the initial position shown in Fig. 4.

The instrument is then raised or lowered to the next depth at which a determination is to be made. It is allowed to remain stationary there until the compass 83 and the rolling member 78 have come to rest, whereupon the switch 99 is again closed, repeating the cycle of operations as described above.

The apparatus is so designed, balanced, and cushioned that the rotation of the motor and allied operations have little effect upon the rest position of the ball and compass. Moreover, the motor is designed to stop almost immediately when its circuit is opened so that it is at rest during the major portion of the time during which the film is being exposed.

It will be apparent from the foregoing that the invention provides a well surveying apparatus which may be entirely controlled from the surface of the earth through a single conductor cable. Moreover, in view of the fact that a signal is received at the surface of the earth at each time a predetermined film displacement has taken place, the spacing between successive records on the film can be maintained constant and independent of the amount of film in either film can. If the film breaks, jams or runs out, this will be immediately indicated to the operator at the surface of the earth and he can remove the instruments from the bore hole and correct the difficulty without wasting further time in taking additional records.

It is also apparent that the time between successive records may be completely controlled from the surface, and that the length of exposure of the film also may be completely controlled from the surface. For example, the record at each thousand feet could be over exposed to assist in assigning the depth to each record. It has also been found very practical occasionally to leave an extra space between records to establish definitely the depth of each shot. To accomplish this, the switch 99 is opened by the operator as soon as the pilot light 98 starts to burn brightly, so that the exposure of the corresponding position on the film is negligible and a blank space is left there.

Many modifications in the specific embodiment described above will suggest themselves to those skilled in the art. For example, the pilot light 98 may be omitted and the ammeter 97 used to indicate when the lamps 73 are illuminated. Obviously, the source of voltage 90 may comprise either a storage battery or generator of alternating current if desired.

The specific embodiment of the invention set forth in the foregoing specification is intended merely to be illustrative and not restictive and it is susceptible of numerous changes in form and detail within the scope of the appended claims.

I claim:

1. In apparatus for obtaining indications of the inclination of a bore hole, which apparatus includes a casing adapted to be lowered into a bore hole, a movable record strip in the casing and an electrical motor for moving said record strip, the combination of a source of electrical energy at the surface, a circuit including a single conductor cable connected to said source and motor, first switching means at the surface for opening and closing said circuit, and second switching means in said casing and adapted to be actuated by the record strip after predetermined displacements thereof for connecting said motor in said circuit, when said first switching means is actuated to close said circuit, to give the record strip a predetermined displacement and for disconnecting said motor from the circuit after said displacement has taken place.

2. In apparatus for obtaining indications of the inclination of a bore hole, which apparatus includes a casing adapted to be lowered into a bore hole, a movable record strip in the casing, an electric motor for moving the record strip, and electrical illuminating means for exposing said record strip, the combination of a source of electrical energy at the surface of the earth, a circuit including a single conductor cable for supplying electrical energy from said source to said motor and illuminating means, and switching means in the casing and operated by said record strip for connecting said source selectively to said motor and illuminating means.

3. In apparatus for obtaining indications of the inclination of a bore hole, which apparatus includes a casing adapted to be lowered into a bore hole, a movable record strip in the casing, an electric motor for moving the record strip, and electrical illuminating means for exposing said record strip, the combination of a source of electrical energy at the surface of the earth, a circuit including a single conductor cable for supplying electrical energy from said source to said motor and illuminating means, first switching means at the surface for opening and closing said circuit and second switching means actuated by the said record strip after predetermined displacements thereof, for connecting said motor in said circuit, when said first switching means is actuated to close said circuit, for a sufficient length of time to give the record strip a predetermined displacement and for connecting the illuminating means in said circuit after said displacement has taken place.

4. In apparatus for obtaining indications of the inclination of a bore hole, the combination

of a casing adapted to be lowered into a bore hole, a single conductor cable extending from said casing to the surface of the earth, a source of electrical energy at the surface of the earth having one terminal connected to ground and a second terminal connected to the conductor in said cable, first switching means at the surface for controlling the connection of said source to said cable conductor, a movable record strip in the casing, an electric motor for moving said record strip, said motor having one terminal grounded and a second terminal adapted to be connected to the conductor in said cable, and switching means in said casing, actuated by said record strip after predetermined displacements thereof for connecting said motor to said conductor, when said first switching means is actuated to connect said source to said cable conductor, to give the record strip a predetermined displacement and for disconnecting said motor from the circuit after said displacement has taken place.

5. In apparatus for obtaining indications of the inclination of a bore hole, the combination of a casing adapted to be lowered into a bore hole, a single conductor cable extending from said casing to the surface of the earth, a source of electrical energy at the surface of the earth having one terminal connected to ground and a second terminal connected to the conductor in said cable, first switching means at the surface for controlling the connection of said source to said cable conductor, a movable record strip in the casing, an electric motor for moving said record strip, said motor having one terminal grounded and a second terminal adapted to be connected to the conductor in said cable, electrical illuminating means in the casing, having one terminal grounded, and a second terminal adapted to be connected to said cable conductor, and switching means in said casing, actuated by the record strip after predetermined displacements thereof for connecting the motor to said cable conductor, when said first switching means is actuated to connect said source to said cable conductor, for a sufficient length of time to give the record strip a predetermined displacement and for connecting the illuminating means to said cable conductor after said predetermined displacement has taken place.

6. In apparatus for obtaining indications of the inclination of a bore hole, the combination of a casing adapted to be lowered into a bore hole, a single conductor cable extending from said casing to the surface of the earth, a source of electrical energy at the surface of the earth, said source having one terminal grounded and a second terminal connected to the conductor in said cable, first switching means at the surface for controlling the connection of said source to said cable conductor, a movable record strip in the casing, an electric motor for moving said record strip, said motor having one terminal connected to ground and a second terminal adapted to be connected to said cable conductor, electric illuminating means in the casing having one terminal connected to ground and a second terminal adapted to be connected to said cable conductor, and switching means in the casing and actuated by said record strip after predetermined displacements thereof for connecting the conductor in said cable to said motor, when said first switching means is actuated to connect the source to the cable conductor, for a sufficient length of time to give the record strip a predetermined displacement and for connecting the conductor to said illuminating means after the predetermined displacement has taken place.

7. In apparatus for obtaining indications of the inclination of a bore hole, which apparatus includes a casing adapted to be lowered into a bore hole, a movable record strip in the casing, an electric motor for moving the record strip, and electrical illuminating means for exposing said record strip, the combination of a source of electrical energy at the surface of the earth, a circuit including a single conductor cable for supplying electrical energy from said source to said motor and illuminating means, first switching means at the surface for opening and closing said circuit, second switching means in the casing, normally connecting said circuit to said motor, so that said motor is energized when said first switching means is actuated to close said circuit, cam means driven by said record strip for actuating said second switching means to make a second connection between said circuit and said motor and to prepare a connection between said illuminating means and said circuit, and for releasing said switching means after the motor has given said record strip a predetermined displacement, and electrical means connected in circuit with said conductor for holding in part of said switching means after the same has been released by said cam means so as to complete the connection between said illuminating means and circuit and to break the connection between said motor and said circuit.

8. In apparatus for obtaining indications of the inclination of a bore hole, which apparatus includes a casing adapted to be lowered into a bore hole, a movable record strip in the casing, an electric motor for moving the record strip, and electrical illuminating means for exposing said record strip, the combination of a source of electrical energy at the surface of the earth, a circuit including a single conductor cable for supplying electrical energy from said source to said motor and illuminating means, first switching means at the surface for opening and closing said circuit, indicating means connected to said conductor at the surface, second switching means in the casing, normally connecting said circuit to said motor, so that said motor is energized when said first switching means is actuated to close said circuit, cam means driven by said record strip for actuating said second switching means to make a second connection between said circuit and said motor and to prepare a connection between said illuminating means and said circuit, and for releasing said switching means after the motor has given said record strip a predetermined displacement, and electrical means connected in circuit with said conductor for holding in part of said switching means after the same has been released by said cam means so as to complete the connection between said illuminating means and circuit and to break the connection between said motor and said circuit, the electrical characteristics of the circuit including the indicating means being different for each said connection of said circuit, whereby said indicating means will provide a different indication at the surface for each said connection.

HENRI-GEORGES DOLL.