June 20, 1939. J. T. PUTNAM ET AL 2,163,562

ILLUMINATING AND ADVERTISING DEVICE FOR SHOWCASES

Filed Nov. 12, 1938

Fig. 1.

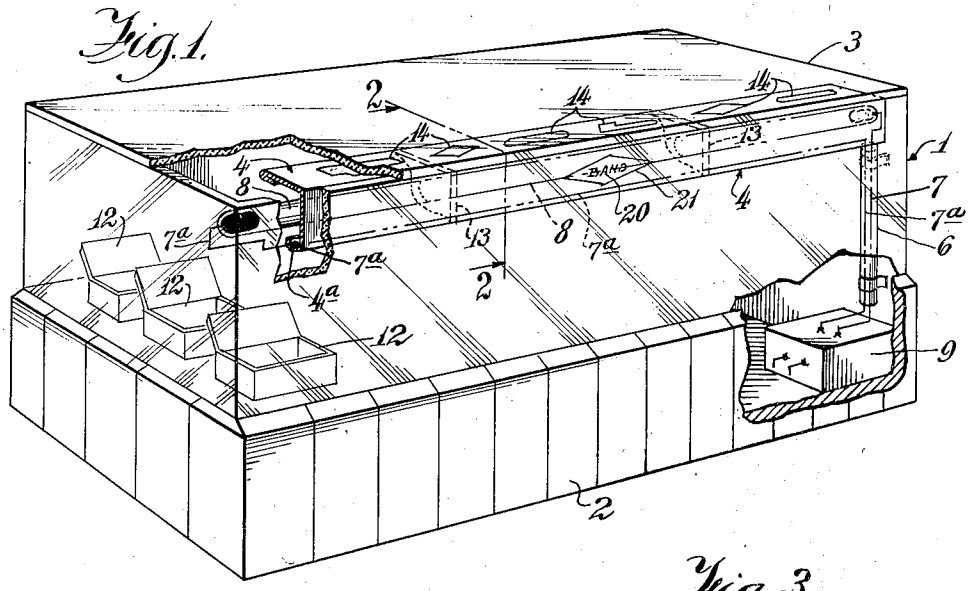

Fig. 3.

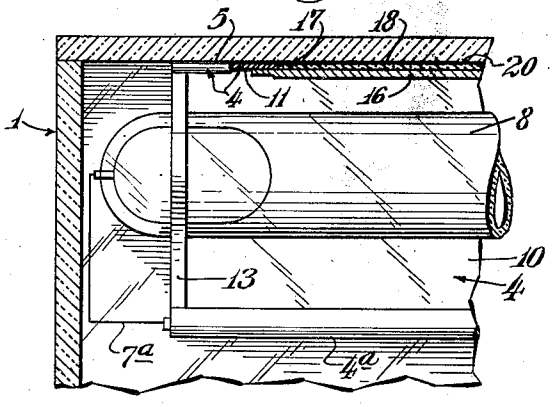

Fig. 2.

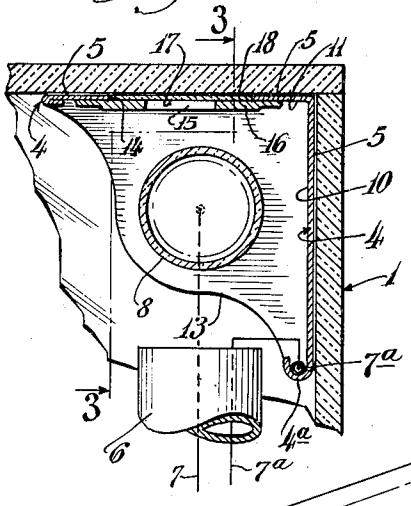

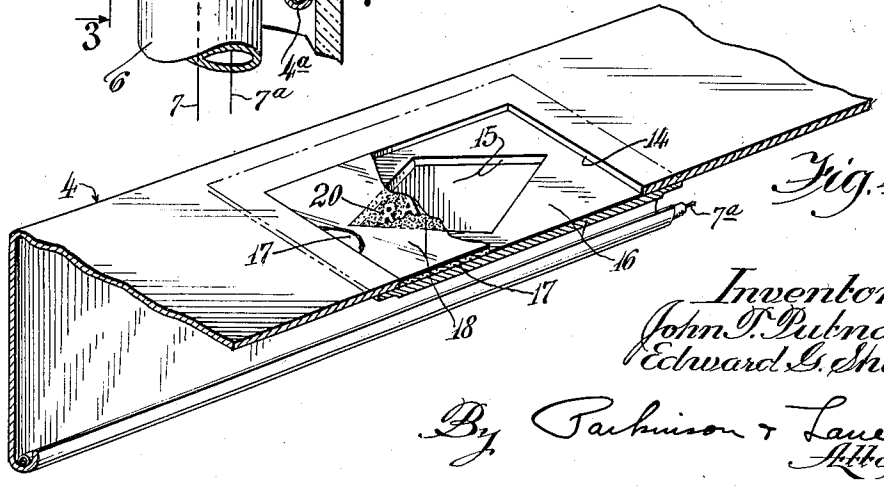

Fig. 4.

Inventors:
John T. Putnam
Edward G. Shure

By Parkinson & Lane
Attorneys

Patented June 20, 1939 2,163,562

UNITED STATES PATENT OFFICE

2,163,562

ILLUMINATING AND ADVERTISING DEVICE FOR SHOWCASES

John T. Putnam and Edward G. Shure, Chicago, Ill.; said Shure assignor to J. Howard Seymour, Wayne, Ill.

Application November 12, 1938, Serial No. 240,098

7 Claims. (Cl. 40—130)

Our invention relates to an illuminating and advertising device for a show case or the like and more particularly to novel means for placing advertising in a show case and means for illuminating the show case and advertising matter.

In the past, it has not been possible to properly illuminate show cases containing cigars, meats, and other products which are subject to spoilage by heat, in or close to the case. Such show cases have been illuminated by a light source placed a distance from the case, which has been further dissipated or weakened by passing through the glass of the case.

It is an object of the present invention to provide a source of cold light which may be placed in the show cases. By a cold light we mean one which will not give off a sufficient amount of heat to spoil the articles in the show case. For example, it will not dry out tobacco products or raise the temperature of meat or other food products appreciably.

The usual filament bulbs can not be used in show cases for such materials, because of the heat developed thereby and are undesirable because they do not give even distribution of light to the entire show case. The gaseous luminous tubes previously on the market, although they do not give off sufficient heat to damage the goods, are, nevertheless, not usable because they emit a colored light which does not display the goods in their true colors. Recently gaseous tubes containing combinations of argon, neon or helium gas, mercury and a fluorescent powder in a glass tube, have been put on the market. These tubes produce a white or "daylight white" illumination and we have found that they display goods in a show case without distorting their colors and throw off a comparatively small amount of heat so as not to damage the goods. Furthermore, such a light consumes far lower wattage than the present filament bulbs. As it is possible to put this tube in the case, there is no dissipation of the light caused by penetration of the panes of glass. The tubes we have described have a much longer life than the filament bulbs. Another advantage is that the reflector may be made of cheaper material in that it is not necessary to employ a reflector made of heat resisting material.

It is a further object to provide a novel reflector bracket or the like for our light source and in which may be inserted advertisements of various products, the light source serving to illuminate the advertisements in addition to the case. The tube is placed in a reflector, which is either triangular or arcuate, or other shape, suitable for the purpose, in the upper top corner of the show case. Our invention includes the cutting out of various portions of either the top and/or side of this reflector and inserting into these cut-out portions, advertisements of various products, the light from the tube shining through the cut-out portions and illuminating the advertisements so as to attract the eye of the purchaser of the goods in the show case. The cut-out portion may be filled with a glass or other transparent or translucent material covered with a silk screen, lithographic print, decalcomania or the like, bearing the advertisement.

Further objects are to provide a construction of maximum simplicity, efficiency, economy and ease of assembly and operation, and such further objects, advantages and capabilities as will later more fully appear and are inherently possessed thereby.

The invention further resides in the construction, combination and arrangements of parts illustrated in the accompanying drawing, and while we have shown therein a preferred embodiment, it is to be understood that the same is susceptible of modification and change, and comprehends other details, arrangements of parts, features and constructions without departing from the spirit of the invention.

In the drawing:

Fig. 1 is a view in perspective of a show case equipped with our novel illuminating and advertising device and with certain parts broken away to more clearly show certain features.

Figure 2 is an enlarged fragmentary view in vertical cross section taken on the lines 2—2 of Fig. 1.

Fig. 3 is a cross sectional view taken on the lines 3—3 of Fig. 2.

Fig. 4 is a fragmentary view in perspective of our novel bracket with certain parts broken away.

Referring more particularly to the embodiment shown in the drawing, the show case is shown at 1, having base 2 of wood, metal, stone or other suitable material, and merchandising display portion 3, the top, front and sides of which are usually of glass with the customary sliding doors (not shown) in the back. In the front top corner of the show case is located our novel bracket 4 which, as shown, is substantially triangular in cross section and affixed to the glass top and front of the show case by suitable adhesive 5 or by screws, brackets or the like. In one corner of the show case, is metal tube or conduit 6, housing wires 7 and 7a for connecting the illuminating tube 8 with a transformer 9 in the base of the show case. This transformer is connected to a suitable electrical source (not shown). This tube 8 contains a suitable mixture of argon, neon or helium gas with mercury and a fluorescent powder to give off a white cold light when the electrical current is switched on. We have found

that by coating a glass tube having the usual electrodes with a fluorescent powder, filling the tube with neon gas and adding a few drops of mercury we get excellent results. The tube preferably extends almost the entire length of the show case so as to illuminate the entire case and contents evenly. The faces 10 and 11 of the reflector 4 are properly polished, plated, or prepared to reflect the light from the tube 8 whereby substantially the entire light given off by this tube is directed on the contents of the show case, such as the cigar boxes 12. The tube is held in the reflector by a plurality of suitable insulated supports 13 extending inwardly from the bracket 4. Each end of the tube is provided with an electrode suitably connected with one of the cables or wires 7. The lower edge 4a of the bracket may be bent over to provide a conduit for housing the wire 7a for attachment to the end of the tube opposite the conduit 6. If desired, another conduit for housing the wire 7a may be laid in the base and extend up the other end of the case 3.

In the top of the reflector bracket 4 are cut-out portions 14. These cut-out portions may be of varied sizes and shapes as shown. Shelf or ledge portion 16, adapted to house advertising plate 17 is suitably secured to the bracket and is provided with cut-out portions 15 of whatever shape desired. The portion 16 may be an enlargement of the bracket or may be suitably attached thereto. This advertising plate is inlaid in the opening 14 and is preferably of glass or other transparent or translucent material and has placed on either its top or bottom a sheet 18 containing advertising material 20. If desired, the sheet 18 may be placed between two sheets of glass. This sheet 18 may be a fabric, such as silk, screen, decalcomania, lithographic print or the like, which is affixed to the plate as by suitable transparent adhesive, the advertising material being so arranged on the sheet as to be directly over the opening 15 in the shelf 16 whereby the light from the tube 8 will illuminate the advertising material to attract the eye of the purchaser at the show case. If desired, the plate may be opaque with a transparent advertisement embossed thereon. In fact our invention comprehends any plate or the like adapted to bear a transparent or translucent advertisement or notice thereon which may be illuminated by the source of light in the show case. As shown, the advertisements or reading matter may be on the top of the bracket and show case and there may be one or a plurality of these cut-out portions with their advertising material therein. If desired, however, the advertisements may be placed in the front of the bracket as shown at 21. The fluorescent powder may be any of those used commercially for such purposes such as tungstate or silicate crystals either alone or mixed together.

It is also apparent that our novel bracket with its advertisements may be used for supporting filament bulbs where the merchandise in the show case will not be damaged by the heat given off thereby.

Having disclosed the invention, we claim:

1. In an illuminating and advertising device for a show case, a gaseous illuminating tube giving off a cold light, a reflector bracket for supporting said tube and reflecting the light therefrom into the show case, and cut-out portions in said bracket and containing advertising matter illuminated by the tube.

2. In an illuminating and advertising device for a show case, a reflector bracket in said show case, a gaseous illuminating tube giving off a cold light for illuminating the contents of the show case and supported in the bracket, a light transmitting plate containing an advertisement, means for holding the plate in the bracket, and cut-out portions in the bracket and adjacent the plate and so constructed and arranged that the light from the tube will project therethrough to illuminate the advertisement.

3. In an illuminating and advertising device for a show case, a reflector bracket in said show case, a light source for illuminating the contents of the show case and supported in the bracket, a light transmitting plate containing an advertisement, means for holding the plate in the bracket, and cut-out portions in the bracket and adjacent the plate and so constructed and arranged that the light from the tube will project therethrough to illuminate the advertisement.

4. In an illuminating and advertising device for a show case, a reflector bracket in said show case, a gaseous illuminating tube giving off a cold light for illuminating the contents of the show case and supported in the bracket, a shelf in the bracket, a light transmitting plate in the shelf, an advertisement on said plate, and cut-out portions in the bracket and adjacent the plate so constructed and arranged that the light from the tube will project therethrough to illuminate the advertisement.

5. In an illuminating and advertising device for a show case, a reflector bracket in said show case, a gaseous illuminating tube giving off a cold light for illuminating the contents of the show case and supported in the bracket, a light transmitting plate in the bracket, a decalcomania on the plate, and cut-out portions in the bracket and adjacent the plate so constructed and arranged that the light from the tube will project therethrough and illuminate the advertisement.

6. In an illuminating and advertising device for a show case, a reflector bracket in said show case, a gaseous illuminating tube giving off a cold light for illuminating the contents of the show case and supported in the bracket, a light transmitting plate in the bracket, a fabric screen containing an advertisement on the plate, and cut-out portions in the bracket and adjacent the plate so constructed and arranged that the light from the tube will project therethrough and illuminate the advertisement.

7. In an illuminating and advertising device for a show case, a reflector bracket in said show case, a gaseous illuminating tube giving off a cold light for illuminating the contents of the show case and supported in the bracket, a light transmitting plate in the bracket, a print containing an advertisement on the plate, and cut-out portions in the bracket and adjacent the plate so constructed and arranged that the light from the tube will project therethrough and illuminate the advertisement.

JOHN T. PUTNAM.
EDWARD G. SHURE.