April 16, 1957 J. H. STAAK 2,789,238

FLAME ARRESTOR FOR DYNAMOELECTRIC MACHINES

Filed Aug. 2, 1954

Fig. 1.

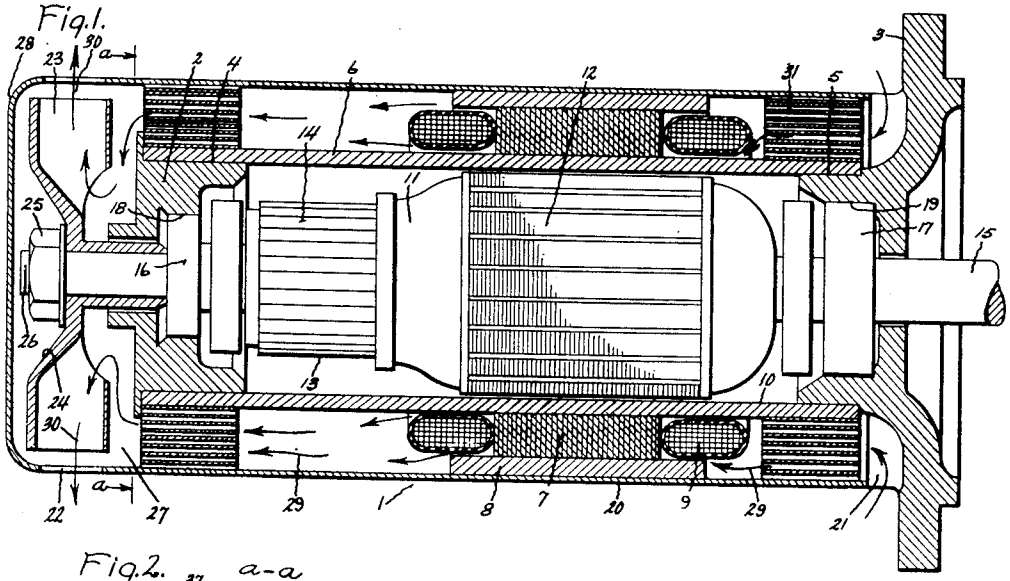

Fig. 2.

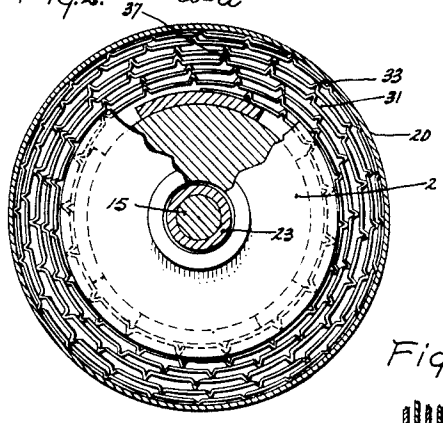

Fig. 3.

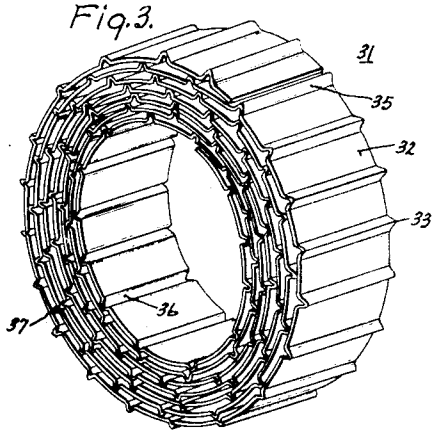

Fig. 6.

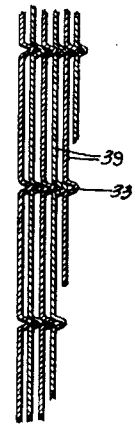

Fig. 5.

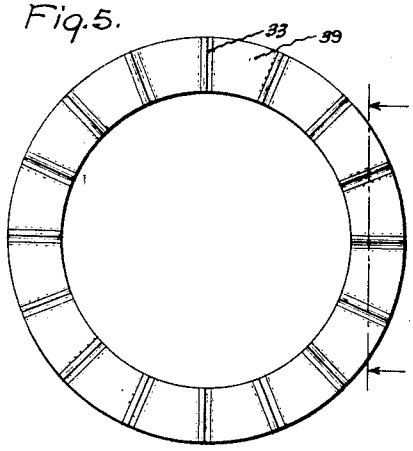

Fig. 4.

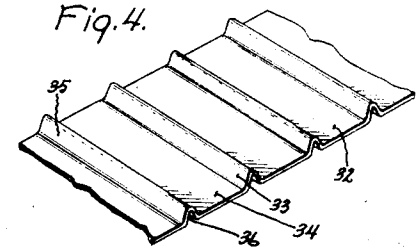

Inventor:
Julius H. Staak,
by Robert G. Sturz
His Attorney.

United States Patent Office

2,789,238

Patented Apr. 16, 1957

2,789,238

FLAME ARRESTOR FOR DYNAMOELECTRIC MACHINES

Julius H. Staak, Fort Wayne, Ind., assignor to General Electric Company, a corporation of New York

Application August 2, 1954, Serial No. 447,248

10 Claims. (Cl. 310—88)

This invention relates to explosion-preventing means, and more particularly to improved means for preventing the dangers of fire and explosions from such machines.

It is frequently necessary to use dynamoelectric machines which are ventilated with the ambient air under circumstances where the air surrounding the machines may contain sufficient inflammable material so that a spark or flame originating in the machine might, if allowed to travel outside the confines thereof, cause an explosion. It has been a common practice to provide machines used in such atmospheres with means to prevent any flames originating within the machines from escaping outside, particularly through the ventilating openings. These means generally take the form of a plurality of layers of non-inflammable highly heat-conductive material, each layer being spaced from each other layer so as to provide a path therebetween. The layers are made sufficiently wide and close together so that any flame travelling between the layers will be cooled below the ignition point before reaching the end of the layers. These means, generally called flame arrestors, are placed so as to completely obstruct all passages between the motor enclosure and the outside atmosphere, so that any flame originating within the motor enclosure must pass between the layers of flame arrestors to reach the outside.

In the past, flame arrestors have proved a relatively expensive item, both as to material required and assembly. To meet the prime requirement of adequate surface area with which the flame must come in contact, it has been the custom to provide special means to space each layer from each other layer, or else to corrugate one strip while providing another strip which will fit in between each two superimposed turns of the first strip to prevent any nesting. Such means have resulted in a decrease in the surface area available. It will be seen therefore that it would be highly desirable to preserve the flame-extinguishing features of the prior art intact, while materially decreasing both the cost of the materials and the cost of assembly of the flame arrestor.

It is, therefore, an object of this invention to provide improved flame arresting means for dynamoelectric machines.

Further objects and advantages of this invention will become apparent and the invention will be better understood by reference to the following description and the accompanying drawing, and the features of novelty which characterize this invention will be pointed out with particularity in the claims annexed to and forming a part of this specification.

This invention, in its broadest aspect, provides a plurality of superimposed layers of an uninflammable highly heat-conductive material. Indentations in the layer, the thickness of the layer of material, and the shape of the indentations are made such that it is impossible for the indentations of one layer to nest completely in the indentations of the next layer. Thus, no matter whether the indentations coincide, there will always be sufficient space provided, because of the indentations betweeen layers, to

preserve the desired amount of surface area in order properly to extinguish flames emanating from the dynamoelectric machine. The layers may be formed either from a continuous strip of material spirally wound or from annular strips of material superimposed upon each other.

In the drawing,

Figure 1 is a side view, partly in cross section, of a dynamoelectric machine embodying the improved flame-arresting means of this invention;

Figure 2 is a view in perspective of the improved flame-arresting means of this invention;

Figure 3 is a view in perspective of the improved flame-arresting means of this invention;

Figure 4 is an enlarged view in perspective of a small section of the means shown in Figure 3;

Figure 5 is a plane view of a modification of the improved flame arresting means; and

Figure 6 is a view along line *b-b* in Figure 5.

Referring now to Figures 1 through 4 of the drawing, there is shown a dynamoelectric machine 1, which may be, for instance, a direct current series motor as shown. It will be understood that this type of machine is used for illustrative purposes only, and that the flame arresting means of this invention is equally effective in other types of dynamoelectric machines. Motor 1 has a pair of end shields 2 and 3 which have, respectively, circular peripheral surfaces 4 and 5 to provide positioning surfaces for the stator poles 6 of motor 1. This arrangement is more fully described in application Serial No. 339,991, filed March 3, 1953, now Patent No. 2,683,826, by the present applicant and assigned to the assignee of this invention.

Laminated core structures 7 may be formed on the outside of poles 6 with the individual core structures 7 being connected by an annular yoke 8 surrounding them. Coils, such as those indicated at 9, may be wound about cores 7 on the outside of pole pieces 6. The pole pieces form a bore 10 for a rotor 11 having windings 12. A commutator 13 is provided having bars 14 which are connected (not shown) to the armature windings 12. The conventional brush mechanisms and electrical leads will of course be provided in conjunction with commutator 13. These have however been omitted from the drawing so that the invention might be brought out with greater clarity.

A shaft 15 is secured to the assembly of commutator 14 and armature 11, and is rotatably mounted in bearings 16 and 17 which are respectively positioned in recesses 18 and 19 of end shields 2 and 3 respectively. A housing member 20 is positioned over the motor assembly against end shield 3. Ventilation inlets 21 are provided between housing 20 and end shield 3 and ventilation outlets 22 are provided at the other end of housing 20. A fan member 23 is secured to shaft 15 at 24 by any desired means such as a nut 25 secured on threaded portion 26 of shaft 15. It will be observed that housing 20 is so formed as to provide a chamber 27 between end shields 2 and end 28 of housing 20 in which fan 23 will rotate. When the motor coils are energized to cause armature 12 and shaft 15 to rotate, fan 23 will draw air in through openings 21; this air will then pass through the motor to cool the stator core and windings, as indicated by arrows 29, and will be expelled through openings 22, as indicated by arrows 30.

It is well known in the art that when dynamoelectric machinery is used in atmospheres containing inflammable matter, such as gasoline fumes, there arises a danger of explosion from sparks which under various circumstances may originate almost anywhere in the machine, and which are created under ordinary running conditions by the contact of brush mechanisms on commutator 14. Where the atmosphere outside the machine is permitted to enter it such sparks may ignite the inflammable ma-

terial and, if the flames so created are permitted to reach the outside atmosphere a larger explosion may occur. For these reasons flame arrestors 31 are provided at each end of the motor so as to separate entire motor assembly from the openings 21 and 22. In the embodiment shown in Figure 1 the flame arrestor is located between the outside of pole pieces 6 and the inner surface of housing 20.

Each flame arrestor 31 is made up of a strip of non-inflammable material having high heat conductive qualities, such as, for instance, brass. At regularly spaced intervals along the length of strip 32 there are provided indentations such as 33 which preferably extend the entire width of the strip. As shown in the instant embodiment, indentations 33 are substantially U-shaped. It will, however, be understood that these indentations may be of various other shapes with equally beneficial results. The feature of prime importance as to indentations 33 is that their shape be such with respect to the thickness 34 of the strip that the outer configuration 35 of each indentation be sufficiently larger than the recess 36 formed on the other side of the strip by the indentation so that it will not be possible for any indentation 33 to nest within the indentation of a superimposed strip. This situation is illustrated at 37 in Figure 2 and at 38 in Figure 3. By so proportioning indentations 33 and the thickness 34 of the strip 32 it is possible to wind the strip upon itself in a spiral as shown, and to have the indentations maintain each superimposed layer at a proper distance so as to avoid substantial obstruction of the ventilation of the machine while providing a large amount of surface area of the strip 32 in order to absorb heat from any flame passing through. Location 37 in Fig. 2 and location 38 in Figure 3 illustrate that even when two superimposed indentations 33 are directly one above the other, the distance between the superimposed strips will not be appreciably affected thereby. It therefore becomes unnecessary to provide a strip intermediate each of the superimposed layers of strip 32, since the strip 32 may be wound entirely at random without fear that nesting indentations will either unduly obstruct the ventilation or lower the efficiency of the flame arrestor.

Referring now to Figures 5 and 6 of the drawing, there is shown a modification of the invention which will be described using like numerals for like parts. In lieu of a continuous strip wound in spiral fashion there may be provided a plurality of annular strips such as that indicated at 39. Each of these will have indentations 33 as before. In order to provide a flame arrestor, a plurality of annular strips 39 are superimposed one upon the other as indicated in Fig. 6.

It will be seen that even if every indentation 33 should be directly behind the indentation of the next superimposed strip, there will be no depreciable impairment of the distance between strips or the amount of area in heat conductive relation to a flame passing between the superimposed strips.

It will now be apparent that this invention provides a flame arrestor for dynamoelectric machines which will provide great economy insofar as both the material required and the assembly are concerned while affording a substantial amount of heat-absorbing area without appreciably obstructing the ventilation of the machine.

It will be seen that the improved flame-arresting means of this invention may be used successfully in almost any type of dynamoelectric machine, and that its application will not be limited to types such as that shown in the drawing for illustrative purposes. Also, while the invention has been explained by describing particular embodiments thereof, it will be apparent that improvements and modifications may be made without departing from the scope of the invention as defined in the appended claims.

What I claim as new and desire to secure by Letters Patent of the United States is:

1. In a dynamoelectric machine having a housing with an opening therein, flame arresting means adapted to be positioned between said machine and said opening so that all fluid flow from said machine to said opening must pass through said means, said means comprising a plurality of relatively thin directly superimposed layers of non-inflammable, highly heat-conductive material, said layers having spaced indentations formed therein thereby to space adjacent layers, said indentations being so formed that the space between adjacent layers will remain substantially the same when indentations in adjacent layers respectively are aligned and in contact with each other as when they are out of alignment and contact with each other.

2. In a dynamoelectric machine having a housing with an opening therein, flame-arresting means adapted to be positioned between said machine and said opening so that all fluid flow from said machine to said opening must pass through said means, said means comprising a plurality of relatively thin directly superimposed layers of non-inflammable highly heat conductive material, said layers having spaced indentations formed therein thereby to space adjacent layers, each of said indentations extending substantially across the width of a layer and being so formed that the space between adjacent layers will remain substantially the same when indentations in adjacent layers respectively are aligned and in contact with each other as when they are out of alignment and contact with each other.

3. In a dynamoelectric machine having a housing with an opening therein, flame arresting means adapted to be positioned between said machine and said opening so that all fluid flow from said machine to said opening must pass through said means, said means comprising a plurality of relatively thin directly superimposed layers of non-inflammable highly heat conductive material, said layers having equispaced indentations formed therein thereby to space adjacent layers, each of said indentations extending substantially across the width of a layer, the shape of said indentations and the thickness of said material being so correlated that the space between adjacent layers will remain substantially the same when indentations in adjacent layers respectively are aligned and in contact with each other as when they are out of alignment and contact with each other.

4. In a dynamoelectric machine having a housing with an opening therein, flame-arresting means adapted to be positioned between said machine and said opening so that all fluid flow from said machine to said opening must pass through said means, said means comprising a plurality of relatively thin directly superimposed layers of non-inflammable highly heat-conductive material, said layers having equispaced U-shaped indentations extending substantially across the width of said layers thereby to space adjacent layers, said indentations being so formed that the space between adjacent layers will remain substantially the same when indentations in adjacent layers respectively are aligned and in contact with each other as when they are out of alignment and contact with each other.

5. In a dynamoelectric machine having a housing with an opening therein, flame-arresting means adapted to be positioned between said machine and said opening so that all fluid flow from said machine to said opening must pass through said means, said means comprising a relatively thin strip of non-inflammable highly heat-conductive material spirally wound into directly superimposed layers, said strip having spaced indentations formed therein thereby to space adjacent layers, said indentations being so formed that the space between adjacent layers will remain substantially the same when indentations in adjacent layers respectively are aligned and in contact with each other as when they are out of alignment and contact with each other.

6. In a dynamoelectric machine having a housing with

an opening therein, flame-arresting means adapted to be positioned between said machine and said opening so that all fluid flow from said machine to said opening must pass through said means, said means comprising a relatively thin strip of non-inflammable highly heat conductive material spirally wound into directly superimposed layers, said strip having equispaced indentations thereby to space adjacent layers, each of said indentations extending substantially across the width of a layer, the shape of said indentations and the thickness of said material being so correlated that the space between adjacent layers will remain substantially the same when indentations in adjacent layers respectively are aligned and in contact with each other as when they are out of alignment and contact with each other.

7. In a dynamoelectric machine having a housing with an opening therein, flame-arresting means adapted to be positioned between said machine and said opening so that all fluid flow from said machine to said opening must pass through said means, said means comprising a relatively thin strip of non-inflammable highly heat-conductive material spirally wound into superimposed layers said strip having equispaced U-shaped indentations extending substantially across the width thereof thereby to space adjacent layers, the shape of said indentations and the thickness of said material being so correlated that the space between adjacent layers will remain substantially the same when indentations in adjacent layers respectively are aligned and in contact with each other.

8. In a dynamoelectric machine having a housing with an opening therein, flame-arresting means adapted to be positioned between said machine and said opening so that all fluid flow from said machine to said opening must pass through said means, said means comprising a plurality of relatively thin annular strips of non-inflammable highly heat-conductive material arranged as directly superimposed layers, each of said strips having spaced indentations formed therein thereby to space adjacent layers, said indentations being so formed that the space between adjacent layers will remain substantially the same when

indentations in adjacent layers respectively are aligned and in contact with each other as when they are out of alignment and contact with each other.

9. In a dynamoelectric machine having a housing with an opening therein, flame-arresting means adapted to be positioned between said machine and said opening so that all fluid flow from said machine to said opening must pass through said means, said means comprising a plurality of relatively thin annular strips of non-inflammable highly heat-conductive material arranged as directly superimposed layers, said strips having equispaced indentations therein thereby to space adjacent layers, each of said indentations extending substantially across the width of a layer, the shape of said indentations and the thickness of said material being so correlated that the space between adjacent layers will remain substantially the same when indentations in adjacent layers respectively are aligned and in contact with each other as when they are out of alignment and contact with each other.

10. In a dynamoelectric machine having a housing with an opening therein, flame-arresting means adapted to be positioned between said machine and said opening so that all fluid flow from said machine to said opening must pass through said means, said means comprising a plurality of relatively thin annular strips of non-inflammable highly heat-conductive material spirally wound into directly superimposed layers, each of said indentations extending substantially across the width of a layer, the shape of said indentations and the thickness of said material being so correlated that the space between adjacent layers will remain substantially the same when indentations in adjacent layers respectively are aligned and in contact with each other as when they are out of alignment and contact with each other.

References Cited in the file of this patent

UNITED STATES PATENTS

1,693,958	Patten	Dec. 4, 1928
1,799,565	Patterson	Apr. 7, 1931
1,720,364	Holmes	July 9, 1929