May 12, 1925. 1,537,067

E. J. CARD

DRAWER SUSPENSION

Filed Sept. 19, 1921 3 Sheets-Sheet 1

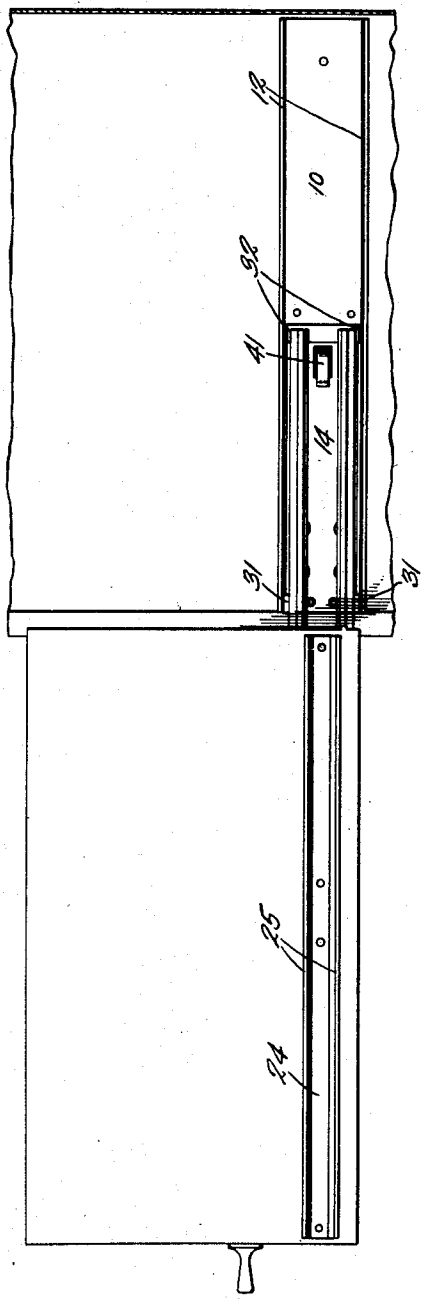

Fig. 1.

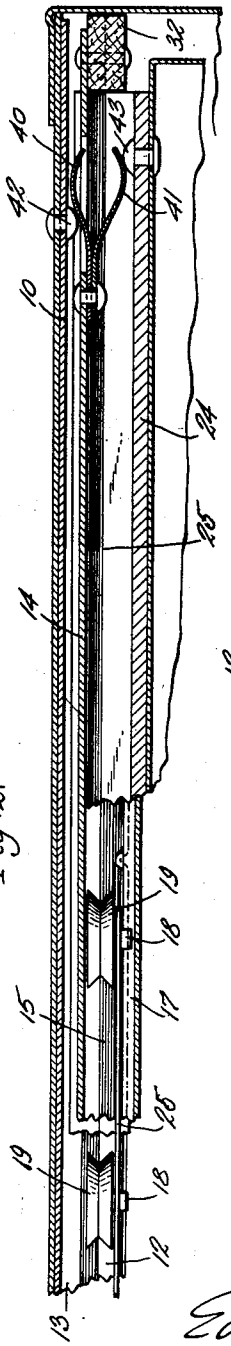

Fig. 2.

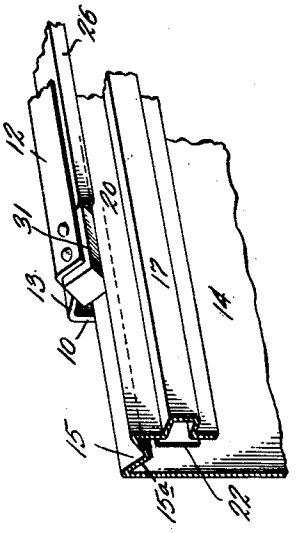

Fig. 3.

INVENTOR
Earl J. Card,
by Parker & Prochnow,
ATTORNEYS.

May 12, 1925. 1,537,067

E. J. CARD

DRAWER SUSPENSION

Filed Sept. 19, 1921 3 Sheets-Sheet 2

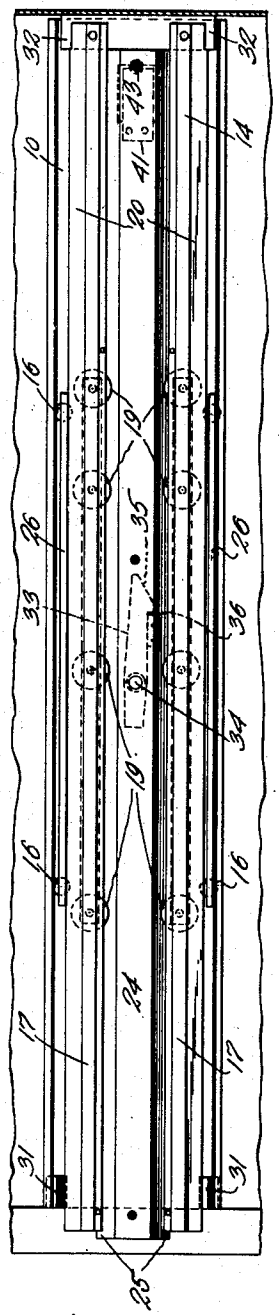

Fig. 4.

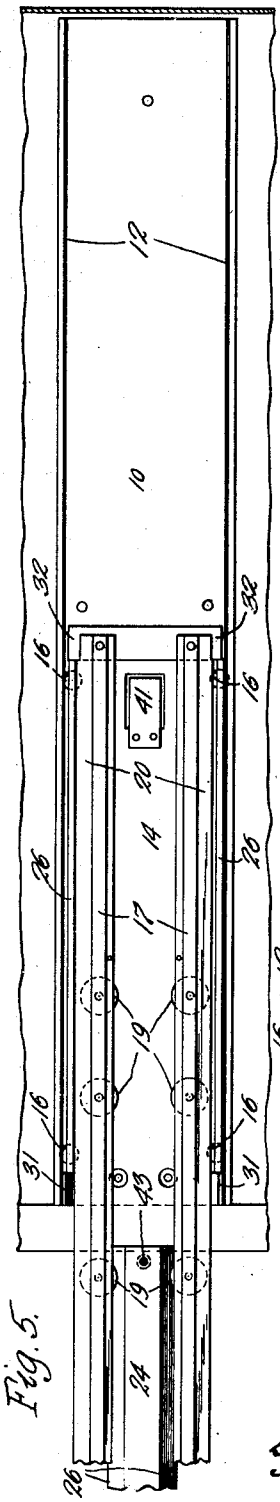

Fig. 5.

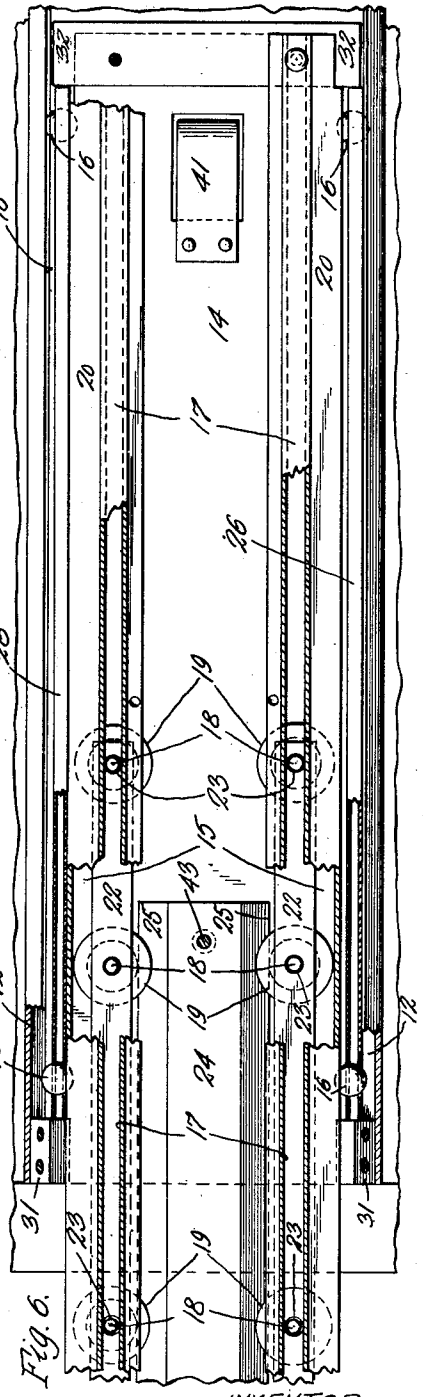

Fig. 6.

INVENTOR
Earl J. Card
by Parker & Prichard
ATTORNEYS.

May 12, 1925. 1,537,067

E. J. CARD

DRAWER SUSPENSION

Filed Sept. 19, 1921 3 Sheets-Sheet 3

Fig. 7.

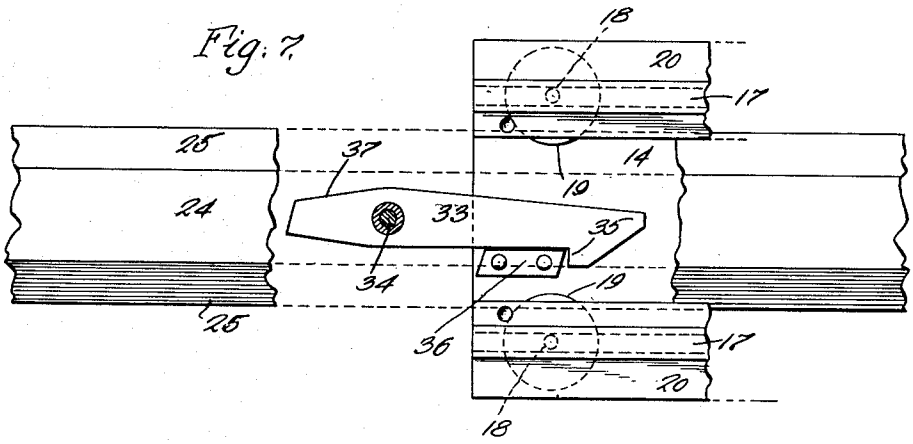

Fig. 8.

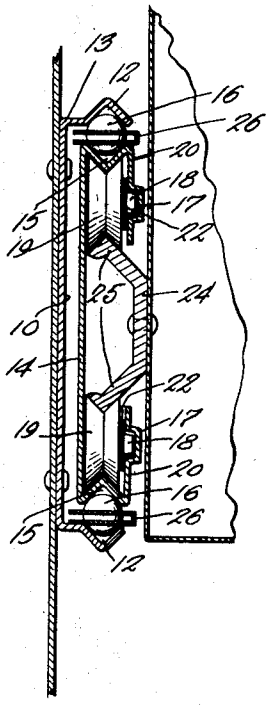

Fig. 9.

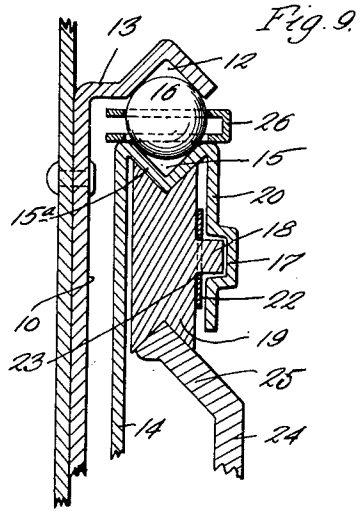

INVENTOR.
Earl J Card,
by Parker & Prochnow,
ATTORNEYS.

Patented May 12, 1925. 1,537,067

UNITED STATES PATENT OFFICE.

EARL J. CARD, OF JAMESTOWN, NEW YORK, ASSIGNOR TO ART METAL CONSTRUCTION COMPANY, OF JAMESTOWN, NEW YORK.

DRAWER SUSPENSION.

Application filed September 19, 1921. Serial No. 501,677.

To all whom it may concern:

Be it known that I, EARL J. CARD, a citizen of the United States, residing at Jamestown, in the county of Chautauqua and State of New York, have invented a new and useful Improvement in Drawer Suspensions, of which the following is a specification.

This invention relates to drawer supports or suspensions of the extensible type, comprising telescoping or relatively sliding members which are associated and connected to the cabinet, case or the like in which the drawer is housed, and to the drawer or the like in such a way as to extend and properly support the drawer even when the latter is pulled out to its full length.

The objects of the invention are to provide a drawer support or suspension which is relatively inexpensive to manufacture and of simple but strong and durable construction and which will enable the drawer to be operated with ease and facility; also to provide a drawer support or suspension that will rigidly support the drawer to which it is connected while in the case and as it is withdrawn from its case; also to provide a drawer support or suspension having a novel arrangement of friction reducing devices and parts which simplifies the construction of the suspension; and also to provide a drawer support or suspension which will not easily get out of order or be subject to disarrangement of its parts. Further objects are to improve drawer suspensions in the other respects hereinafter described and claimed.

In the accompanying drawings:

Fig. 1 is a longitudinal sectional elevation of a portion of a drawer case and drawer suspension embodying the invention, showing the drawer open.

Fig. 2 is an enlarged fragmentary horizontal section thereof showing the closed position of the parts.

Fig. 3 is a broken perspective view of a portion of the suspension.

Fig. 4 is an inside elevation of one of the suspensions showing the closed position of the parts.

Fig. 5 is a similar view thereof, showing the extended position of the parts.

Fig. 6 is a view thereof partly in side elevation and partly in section, on an enlarged scale.

Fig. 7 is a fragmentary view thereof partly in elevation and partly in section showing the latch for limiting the movement of the drawer channel.

Fig. 8 is an enlarged transverse sectional elevation thereof.

Fig. 9 is an enlarged detail view showing one of the rollers and roller spacers.

The drawer supports or suspensions of this invention, briefly stated, comprise telescoping slides or channel members and interposed friction reducing balls and rollers, constructed and arranged in a novel manner, one of said members, as is usual, being connected to the drawer cabinet or case, and another of the members being connected to the drawer or the like, the supports being arranged, as usual, in pairs, one at each side of a drawer to be supported.

10 designates outer supporting members or channels, hereinafter called the case channels, which, as shown, are preferably attached to the sides of the case and support the drawer and extension slides.

Each case channel 10 preferably has a flat, vertical attaching portion and upper and lower lateral flanges forming a pair of facing longitudinal inner grooves 12, the upper groove opening downwardly and the lower groove upwardly. As illustrated, the side edges of the members 10 are bent to form the lateral flanges 13 and the substantially V-shaped grooved portions 12.

14 represents intermediate or floating slides or channels positioned and adapted to slide in the case channels 10. Each floating slide 14 has outwardly facing, upper and lower grooves 15 which cooperate with the grooves 12 to form raceways which receive bearing balls 16, and also a pair of side guide-grooves 17 for the journals 18 of rollers 19. As shown in the drawings, each floating slide is preferably constructed of one piece of sheet metal which is suitably bent to provide upper and lower V-shaped lateral portions 15^a which form said outwardly facing V-shaped grooves 15, and inturned vertical side flanges 20 which contain the journal guide grooves 17. The rollers 19 have substantially V-shaped peripheral grooves which, as illustrated, receive the V-shaped lateral portions 15^a of the floating slides 14. The rollers 19 are confined laterally between the body portion and inturned side flanges of the slide 14 and are pre-

vented from displacement from the slide by the engagement of their journals 18, which are preferably integral with the rollers, into the guide groove 17.

Suitable means are provided for maintaining the rollers 19 in proper spaced relation so as to prevent vertical tilting of the supporting members. In the suspension illustrated, this is done by providing a spacer strip 22 which is provided with suitably spaced holes 23 through which the journals 18 of the rollers extend. In this manner the rollers are always maintained a desired distance apart and the members properly supported on each other.

24 designates the inner or drawer channel or member which is preferably attached to the drawer. In the suspension illustrated, this drawer channel 24 comprises a flat middle attaching portion which is riveted or otherwise suitably secured to a side of the drawer, and upper and lower bearing flanges 25 which have edges shaped to fit within the peripheral grooves of rollers 19. As illustrated, the edges are preferably V-shape in cross section and closely fit the grooves so as to permit no play between these members. The V-shape portions 15^a of the floating slide preferably fit closely into the grooves in the rollers, thereby preventing any lateral play between the floating slide and the rollers.

26 designates a ball spacer consisting of a metal strip having spaced apertures therein to loosely receive the bearing balls 16 between the case and floating channels and to maintain the balls properly spaced apart in their raceways. The formation of the pairs of V-shaped grooves between which the balls are held prevents any lateral play between the case channel 10 and the floating slide. By the described construction in which antifriction balls are used between the intermediate and outer channels, and antifriction grooved rollers are used between the intermediate and inner channels, the raceways or tracks for both sets of antifriction devices are formed by the simple expedient of making the single V-shaped bend 15^a at each edge of the floating or intermediate channel, thus materially simplifying and reducing the weight and size of the suspension.

31 designates suitable stops attached to the front end of the case channel 10 in position to be engaged by the front ends of ball spacers 26. Each intermediate slide 14 also carries adjacent its rear end, a pair of stops 32 which are adapted to engage the rear ends of ball spacers 26. As the intermediate slide is withdrawn the balls and ball spacers 26 travel forwardly until the front ends of the spacers engage stops 31 and the stops 32 engage the rear ends of the spacers, as shown in Fig. 6, thereby preventing further withdrawal of the intermediate slide. The stops 31 and 32 are preferably made of leather or analogous material adapted to cushion the blows and reduce the noise incident to the stopping of the members of the suspension. The inner or drawer channel 24 is likewise provided with means for preventing unintentional withdrawal from the intermediate slide. The preferred means for this purpose, as illustrated, comprise a gravity latch 33 which is pivoted to the outer side of the inner member as at 34 and has a hook 35 for engaging a stop 36 secured to the inner side of the intermediate slide adjacent its front end. The latch is preferably provided with a forwardly extending operating portion 37 by means of which the hook may be raised to clear the stop 36 when it is desired to remove the drawer from the suspension.

In order to prevent the drawer and suspension slides from rebounding when the drawer is "slammed" or more or less violently shoved into the case, one of the slides is preferably provided with a device which is adapted to resiliently and releasably hold the several slides in position within the casing. In the form illustrated, this device is secured to the intermediate slide 14 and consists of a pair of curved spring arms 40 and 41 which project from the slide 14, one toward the case channel 10 and the other toward the drawer channel 24. When closing the drawer the arms 40 and 41 engage rivet heads or small rounded projections 42 and 43 on the case and drawer channels respectively, and releasably hold the parts in their inner positions. The pressure of the springs on the projections is sufficient to prevent accidental rebounding of the drawer, but does not prevent the drawer from being readily pulled out.

I claim as my invention:

1. In a suspension for drawers and the like, the combination of a channel member adapted to be attached to a drawer case and having upper and lower facing grooves, a floating member slidable within said channel member and having outwardly facing grooves cooperating with the grooves of said channel member to provide ball raceways, balls in said raceways, an inner supporting member adapted to be attached to a drawer or the like, rollers between said floating member and said inner supporting member, said rollers having peripheral grooves, and inwardly facing tracks on said floating member fitting into the peripheral grooves of said rollers.

2. In a suspension for drawers and the like, the combination of a channel member having upper and lower facing grooves, a floating member adapted to slide in said channel member between said facing grooves and having grooves facing the respective grooves in said channel member,

balls seated in said grooves, and rollers located in the upper and lower portions of said floating member, said rollers having peripheral grooves, and an inner supporting member arranged to slide in said floating member and having a pair of edges engaging the peripheral grooves in said rollers whereby said supporting member is mounted to slide between said rollers.

3. In a suspension for drawers and the like, the combination of a channel member having upper and lower facing grooves, a floating member adapted to slide in said channel member between said facing grooves, said floating member having upper and lower portions shaped to provide outwardly opening ball grooves and inwardly extending tongues, bearing balls in said grooves, rollers located in the upper and lower portions of said floating member and having grooved peripheries to receive said tongues, and a member on which said rollers travel.

4. In a suspension for drawers and the like, the combination of a supporting member having a pair of spaced lateral flanges, an intermediate member adapted to slide in said supporting member, said intermediate member having upper and lower portions formed to provide outer ball race grooves and inner angles, bearing balls between said flanges and said ball race grooves, peripherally grooved rollers adjacent the upper and lower portions of said intermediate member and into which said angles fit, an inner member movable between the oppositely arranged rollers and engaging said rollers, and a spring device on said intermediate member for frictionally engaging said supporting member when said members are in closed position to releasably maintain said members in such closed position.

5. In a suspension for drawers and the like, the combination of outer, inner and intermediate members telescopically arranged, said outer and inner members being adapted to be secured the one to the drawer and the other to a drawer case, bearing balls between said outer and intermediate members, and bearing rollers having peripheral grooves between said intermediate and inner members, said intermediate member having lateral portions bent to form outwardly facing grooves which cooperate with the grooves of said outer member to form raceways for said balls, and inwardly projecting tracks which enter the peripheral grooves of said rollers.

6. In a suspension for drawers and the like, the combination of a sheet metal channel member having integral bent upper and lower edges providing upper and lower facing grooves, a floating member adapted to slide in said channel member between said facing grooves, said floating member comprising a piece of sheet metal bent to provide upper and lower outwardly facing grooves and upper and lower inwardly extending complementary tongues, friction reducing devices between the respective grooves of said channel member and the outwardly facing grooves of said floating member, an inner supporting member, and rollers between said inner supporting member and said floating member, said rollers being grooved to receive the inwardly extending tongues of said floating member.

7. In a suspension for drawers and the like, the combination of a supporting member having a pair of spaced lateral flanges, an intermediate member adapted to slide in said supporting member between the flanges thereof, an inner member movable within said intermediate member and adapted to be attached to a drawer, and oppositely projecting springs on said intermediate member for engaging respectively with said supporting member and said inner member for frictionally and releasably maintaining said members in closed positions.

EARL J. CARD.