J. C. H. VAUGHT.

CHUCK FOR ROCK DRILLS.

APPLICATION FILED AUG. 1, 1906.

1,068,612.

Patented July 29, 1913.

2 SHEETS—SHEET 1.

Fig. 1.

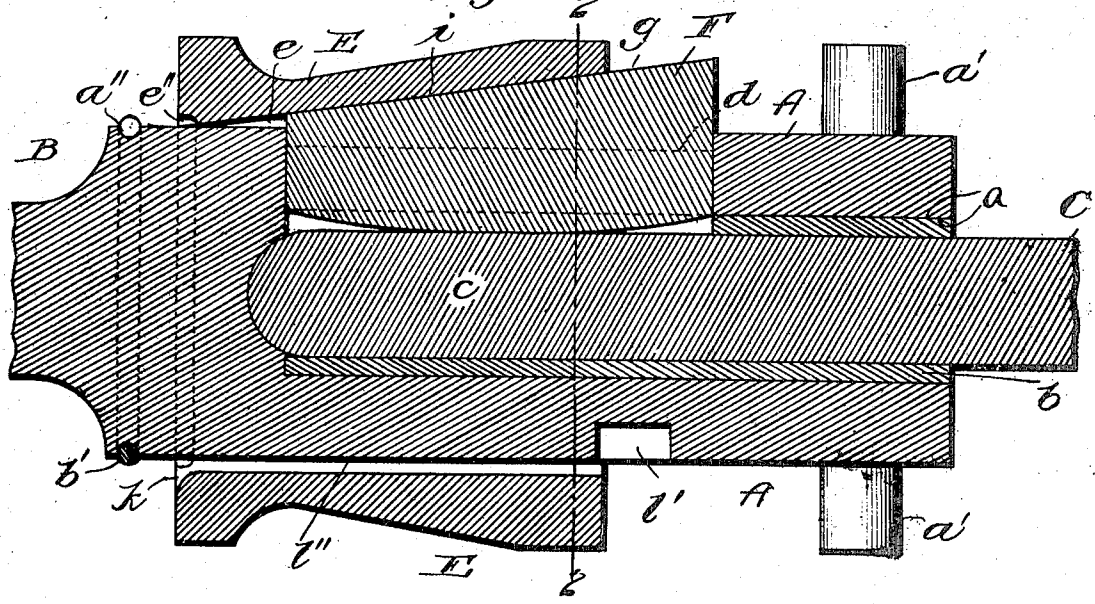

Fig. 2.

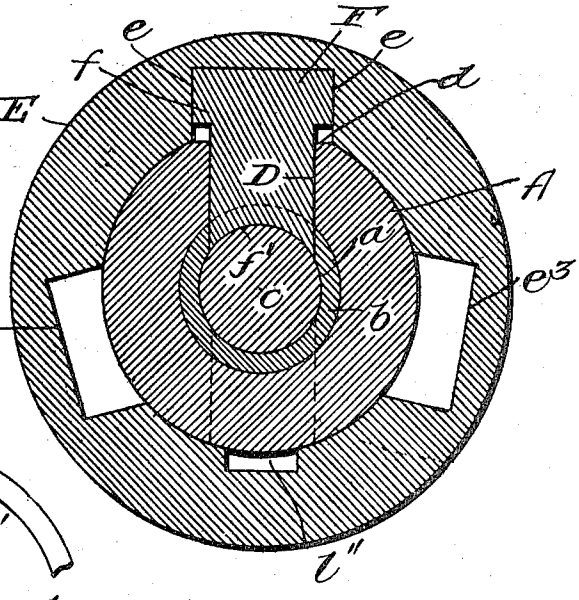

Fig. 10.

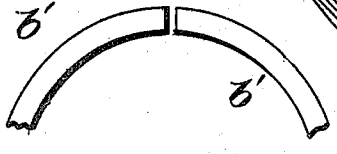

Fig. 4

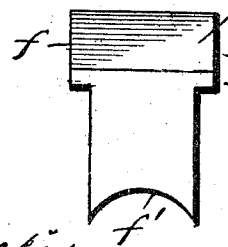

Fig. 3.

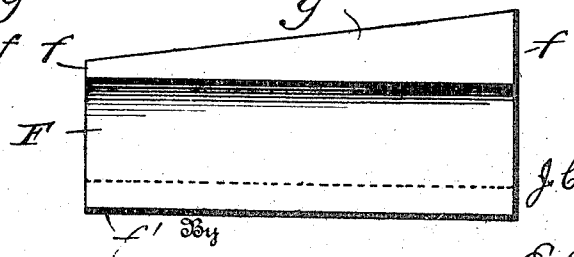

Witnesses

T. L. Mockabee

James F. Brown

Inventor

J. C. H. Vaught

By

C. B. Clark

Attorney

J. C. H. VAUGHT.

CHUCK FOR ROCK DRILLS.

APPLICATION FILED AUG. 1, 1906.

1,068,612.

Patented July 29, 1913.

2 SHEETS—SHEET 2.

Fig. 5.

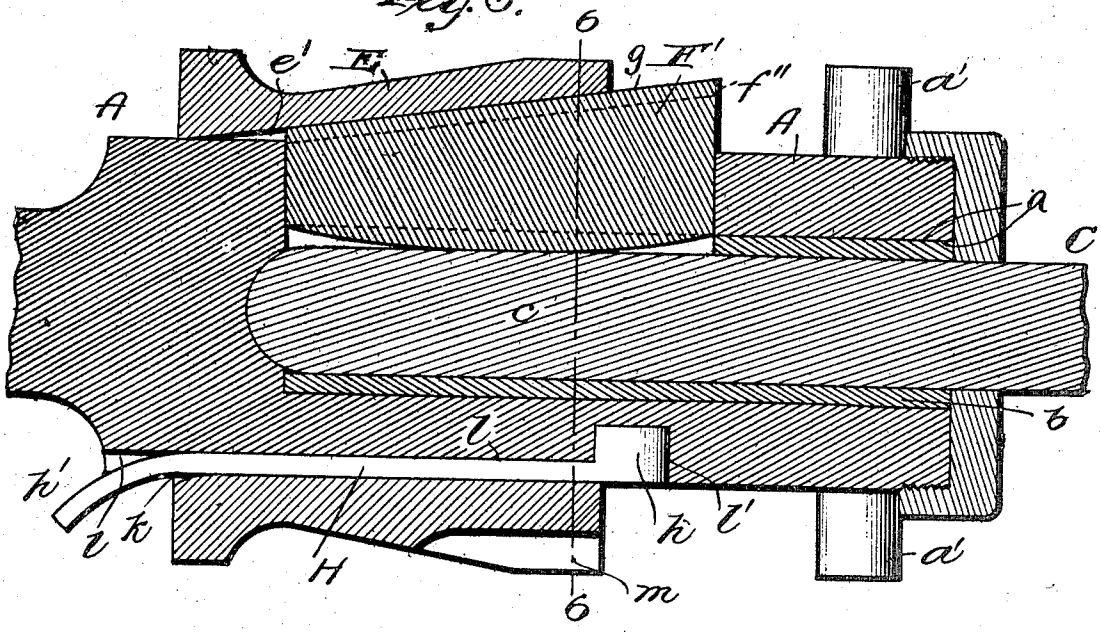

Fig. 6.

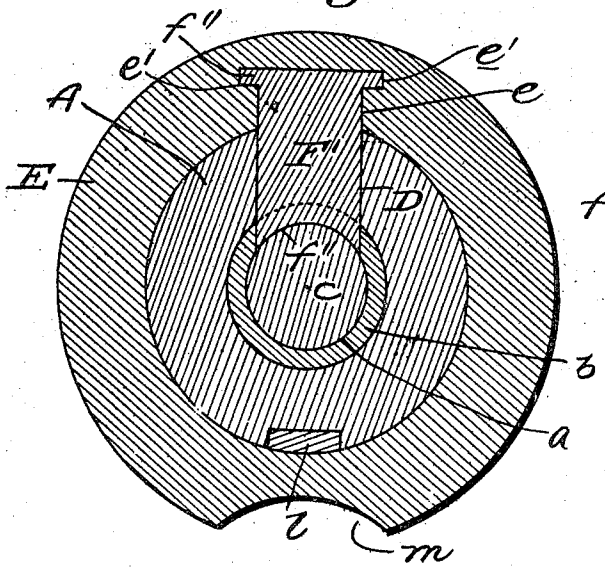

Fig. 9.

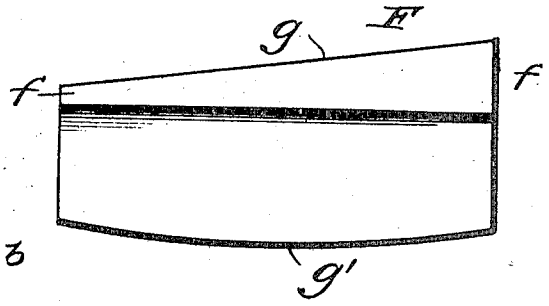

Fig. 7.

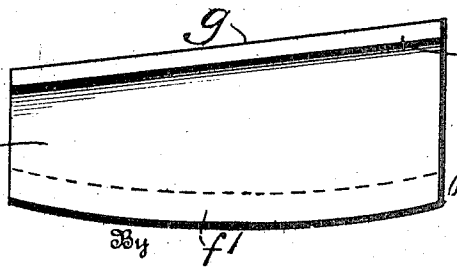

Fig. 8.

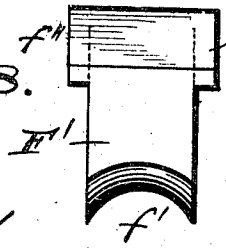

Witnesses

D. L. Morrison

James F. Brown

Inventor

J. C. H. Vaught

By E. B. Clark

Attorney

UNITED STATES PATENT OFFICE.

JAMES C. H. VAUGHT, OF SAN FRANCISCO, CALIFORNIA.

CHUCK FOR ROCK-DRILLS.

1,068,612. Specification of Letters Patent. Patented July 29, 1913.

Application filed August 1, 1906. Serial No. 328,700.

To all whom it may concern:

Be it known that I, JAMES C. H. VAUGHT, a citizen of the United States, residing at San Francisco, in the county of San Francisco and State of California, have invented certain new and useful Improvements in Chucks for Rock-Drills, of which the following is a specification.

This invention relates to chucks for rock drills, and embraces improvement on the device covered by Letters Patent No. 804,904, granted to me.

The object of my invention is to simplify the construction of the gib or key and self-tightening sleeve or keying ring connection by which the shank of a drill is engaged, to facilitate the operation of removing a drill-shank from the chuck and inserting a new one, or readjusting a drill-shank whenever required.

Another object of my invention is to provide an improved form of gib or key which will be adapted to drill-shanks of irregular or tapering form and of different sizes so as to avoid the danger of the tightening sleeve or keying ring bouncing off from the gib during the operation of the drill.

Another object of my invention is to provide simple and effective means for retaining the sleeve or keying ring on the body of the chuck, when it is released from the gib or key, so that it will not be necessary to hold said sleeve or ring with one hand at the time of changing drills.

Another object is to provide improved details of construction which will facilitate and make more effective the operation of the chuck, as will be set forth in connection with the drawing.

The matter constituting my invention will be defined in the claims.

I will now describe my improved devices by reference to the accompanying drawings, in which—

Figure 1 represents a longitudinal section, showing my improved construction of drill-chuck. Fig. 2 represents a transverse section on line 2—2, Fig. 1. Fig. 3 represents a side elevation of a modified form of gib or key. Fig. 4 represents a rear end elevation of the same. Fig. 5 represents a longitudinal section showing the preferred form of chuck. Fig. 6 represents a transverse section of the same on line 6—6, Fig. 5. Fig. 7 represents a side elevation of the preferred form of gib or key, such as used in the chuck shown in Fig. 5. Fig. 8 represents a rear end view thereof. Fig. 9 represents a side elevation of another modified form of gib or key, such as shown in Figs. 1 and 2. Fig. 10 represents a part of a spring steel retaining ring.

In the construction of my improved drill-chuck, the body portion A is preferably made cylindrical, as it can be more easily and cheaply forged in that form. With my present improvements in the gib or key and sleeve, or keying ring, a longitudinal slot D is made in the body A down to the interior shank-socket for receiving a gib or key F. The body A is forged upon, or otherwise secured to, the piston rod B and the exterior of the body, near the outer end, may be provided with a number of studs a' to serve as bearings for a lever, used to force back the sleeve from engagement with the gib. In the body A is bored or otherwise formed a longitudinal shank-socket a, which is provided with a steel bushing b, for receiving the shank c of a drill C. The longitudinal slot D is cut through the body A and the bushing b in the socket a and is of suitable dimensions to receive the body portion of the gib or key F. At the surface opening of the slot D, the upper edges of the body are preferably cut away on each side to form bearing shoulders d, as shown in Fig. 2, for supporting the flanges f of the gib or key F when the shank c is removed from the chuck.

Referring now particularly to the construction shown in Figs. 1 to 4, inclusive, the gib or key F is constructed with a body portion having substantially parallel sides and at the top with side flanges f, which, as shown in Figs. 3 and 4, are thicker or deeper at the forward end, being about $\frac{9}{16}$ of an inch, and comparatively narrow at the rear end, where they are about $\frac{1}{8}$ of an inch. These flanges rest upon the shoulders d when the shank c is withdrawn and, thus support the gib, so that it will not fall into the shank-socket. The upper or outer face g is inclined or tapered from the forward to the rear end to serve as a bearing for the sleeve or ring and the inner face f' is made transversely concave to fit upon the shank c of the drill. The sleeve or keying ring, E, is made with a cylindrical interior opening and with an interior longitudinal slot e for receiving the upper flanged portion of the gib F, as indicated in Figs. 1

and 2. This slot *e* is made with an inclined outer wall *i*, corresponding to the inclined outer face of the gib *g*. By this construction, the gib, when in its slot D serves as a guide for the sleeve E and prevents the sleeve from being accidentally knocked to one side, and thereby loosened or disengaged from the gib. The rear end of the sleeve at the edge of its interior opening, is milled out to form an annular groove or recess *e''*. In the rear end of the body portion A is made an annular groove *a''* for receiving a spring steel ring or clip-stop *b'*. When the sleeve or keying ring E is forced back off from the gib or chuck-key for removing the drill-shank *c* and inserting a new one, the milled out groove *e''* will slide over the ring *b'*, embracing the same and preventing it from being pushed out of its groove, so that it will retain the sleeve or keying ring in the retracted position upon the body. This is quite advantageous in practice, as the operator need not hold on to the sleeve to keep it from backing off on to the piston-rod at the time of changing drills. A retaining device for the sleeve may be otherwise constructed, as described below and as shown in Fig. 5. The sleeve E may also be provided with an interior longitudinal groove *l''* for receiving a spring retaining device such as shown in Fig. 5.

In Figs. 5, 6, 7 and 8, I have shown the gib and sleeve slightly modified in construction. The gib F' is made of the same general form as the gib F, being of greater thickness at the front and having an inclined outer face *g*, but having side flanges *f''* of the same thickness throughout and coinciding with the inclination of the outer face *g*, as shown in Fig. 7. In order to accommodate the side flanges of these gibs, the longitudinal slot *e* in the sleeve is provided with lateral inclined grooves *e'*, *e'*, as shown in Fig. 6. In practice, the side flanges *f''* will be inserted in the lateral grooves *e'* and the sleeve then slid forward over the gib. The advantage of this construction is that, when the sleeve is forced backward to release the drill-shank, the gib will be raised out of its slot and carried by the sleeve as the latter is slid backward on the body of the chuck. The gib will not be carried backward but will simply be partly raised out of the slot by reason of its inclined side flanges sliding in the inclined grooves of the sleeve. Since the side flanges of the gibs are inclined and work in inclined lateral grooves, it will be evident that the main interior slot *e* need not have an inclined outer wall or face in the sleeve E, but such inclined outer wall is preferable for bearing on the inclined face of the gib.

In the form of gib shown in Fig. 9, the under or inner surface *g'* is slightly curved from end to end, giving a longitudinally convex form to such surface in addition to the transverse concavity. This gib with a longitudinally curved inner face is particularly adapted for use with drill-shanks which have become worn into irregular or tapered form. The gib being made with a longitudinally curved surface, it will rock to its proper position on the worn shank and the gib and sleeve will ride together in parallel harmony. The proper inclination of the upper face of the gib will be preserved and the sleeve effectively gripped, so as not to bounce off during the operation of the drill.

Another form of spring retaining device for the sleeve E is shown in Fig. 5. This device consists of an elongated curved spring-bar H, having at its front end an inwardly turned calk or stud *h*, and at or near its rear end an outwardly curved portion *h'*. This bar is made about one-half inch wide and about one-eighth inch thick. In the body A, at any convenient point in its circumference, is milled out a longitudinal groove *l*, which may be on the side opposite the slot *e*, and at the forward end of the slot is bored a recess or socket *l'* for receiving the stud *h*. With this construction, the interior face of the sleeve is provided at its rear end with a flaring groove *k* to accommodate the curved portion *h'* of the spring bar. Instead of making the longitudinal groove *l* in the body A, a longitudinal groove *l''* may be made in the sleeve E, as shown in Fig. 1, but the socket *l'* will be made only in the body A. The stud *h* being placed in the socket *l'* to hold the spring bar in position, the curved rear end *h'* is forced down against the body and the sleeve is then slid over it into the position shown in Fig. 5, and, in such position, will hold the stud *h* in its socket while the curved outer end *h'* of the spring will act as a yielding stop device for the sleeve whenever it is forced back off from clutching engagement with the gib. It will be evident that the spring H may rest either in the groove *l* in the body, Fig. 5, or in the groove *l''* in the sleeve, Fig. 1. In either modified construction, the curved spring-bar H will be held by its stud in the socket *l'* and its curved outer end *h'* will serve to retain the sleeve from backing off onto the piston-rod. When the sleeve is forced back off from clutching engagement with the gib at the time of changing drills, the sleeve will be held in convenient position without it being necessary for the operator to hold it with his hand. When it happens that the drill gets stuck fast in the drill hole, the workman will often strike it with a hammer or wrench to jar it loose; this is liable to loosen the sleeve from the gib and give much annoyance. With my curved spring-bar H, the sleeve, if loosened, will be immediately

urged forward into clutching engagement with the gib. A wide shallow groove *m* is preferably milled out from the under side of the sleeve, as shown in Figs. 5 and 6, for facilitating the operation of changing drills. This groove *m* forms a finger hold for more securely handling the sleeve.

By the operation of the drill, the sleeve E is automatically driven onto the inclined face of the gib, thereby keeping it forced into engagement with the drill-shank and holding it in its socket. When a drill is to be removed and replaced by a new one, the operation can be quickly performed by forcing the sleeve back off from the gib by means of a short lever or the arm of a clamp wrench, bearing on one of the studs *a'*, thereby loosening the gib so that the drill-shank can be taken out and another one inserted in the socket.

I preferably provide the sleeve E, in addition to slot *e*, with two longitudinal slots or gib-ways e^3 and e^4 spaced about one-third of an arc apart, as shown in Fig. 2. The slot e^3 is made one thirty-second of an inch shallower than slot *e*, and the slot e^4 is one thirty-second of an inch shallower than slot e^3. By means of this construction, when the face of the gib has become worn by contact with the shank *c* and the bushing also worn, the gib may be changed to the second shallower gib-way e^3 and finally, after further wear, to the third and still shallower gib-way e^4, thus making it unnecessary to frequently put in new bushings. Evidently a sleeve and a gib will thus serve for a much longer time.

Having described my invention, what I claim, and desire to secure by Letters Patent is—

1. In a drill-chuck, the body having a shank socket and a slot leading thereto, in combination with a gib adapted to work in the slot and project beyond the same when bearing on a shank, and having a longitudinally inclined or tapered outer face and correspondingly inclined side projections or flanges on its outwardly projecting portion, and a sliding sleeve having an interior longitudinal recess inclined from end to end thereof, and lateral inclined grooves leading therefrom adapted to receive said inclined flanges on the gib and slide over the same when the sleeve is slid back on the body of the chuck, and thereby raise the gib off from the drill shank and support it when the drill is to be removed or changed, substantially as described.

2. The combination with the body of a drill-chuck having a socket and a slot leading thereto, of a gib, a sliding sleeve working over the gib and means on the body for loosely engaging the sleeve to prevent it from backing or sliding off therefrom, substantially as described.

3. In a drill-chuck, the combination with the body having a socket and a slot leading thereto, of a gib in the slot, a sliding sleeve adapted to engage the gib, and a spring retaining device for the sleeve on the body, substantially as described.

4. In a self tightening rock drill chuck, the combination of a chuck body, a chuck bushing contained therein and adapted to receive a drill steel, a gib within said chuck and having an inclined top and adapted to bear on said drill steel, a sliding sleeve surrounding said chuck and gib, and a spring clip stop adapted to engage said chuck and limit the movement of said ring.

5. In a drill-chuck, the combination with the body having a socket, a slot leading thereto and a longitudinal groove, of a gib, a sliding sleeve therefor, a spring bar engaged in said groove and having its inner end curved outward to loosely engage the inner end of the sleeve, substantially as described.

6. In a drill-chuck, the body having a longitudinal groove and a communicating recess or socket, in combination with a curved spring bar having a calk or stud at one end, said bar and stud being arranged respectively in said groove and socket, and a sleeve sliding on the body over the spring bar with the curved end of the latter projecting beyond the end of the sleeve for retaining the same on the body, substantially as described.

7. In a drill-chuck, the combination with the body having a shank-socket, a slot leading thereto, also a recess or socket in its outer surface, of a gib, a sliding sleeve and a curved spring-bar having a stud adapted to be engaged in said surface socket, the sleeve being arranged to slide over the gib and spring bar and be retained on the body by the curved spring bar, substantially as described.

In testimony whereof I affix my signature in presence of two witnesses.

JAMES C. H. VAUGHT.

Witnesses:
J. J. GREER,
P. I. ROADES.