April 1, 1930. W. H. SAUVAGE 1,753,133

HAND BRAKE

Filed Feb. 9, 1925 2 Sheets-Sheet 1

Fig. 1.

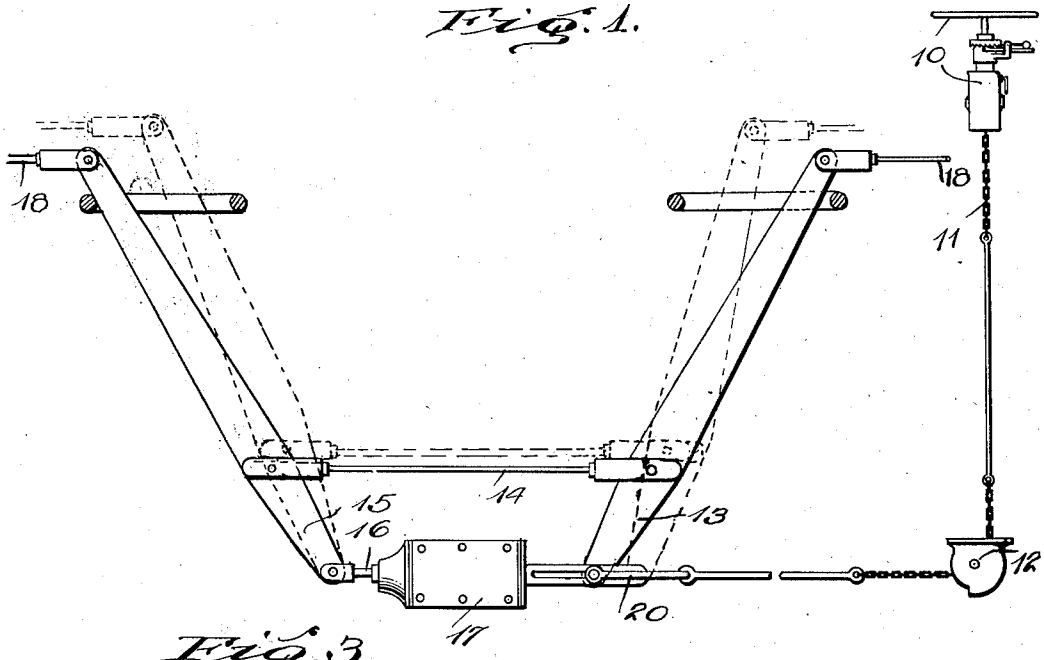

Fig. 3.

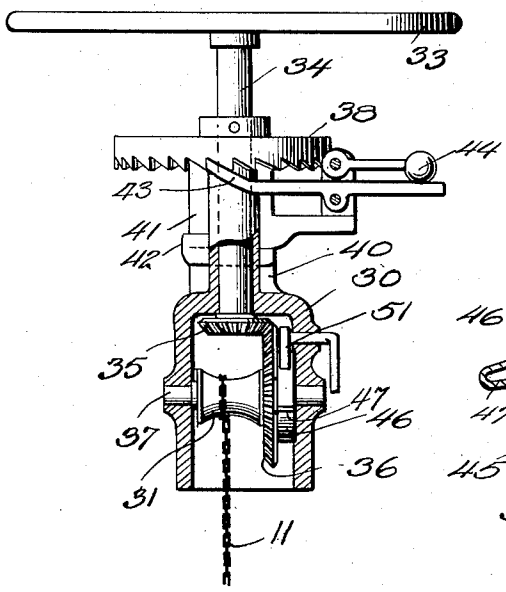

Fig. 4.

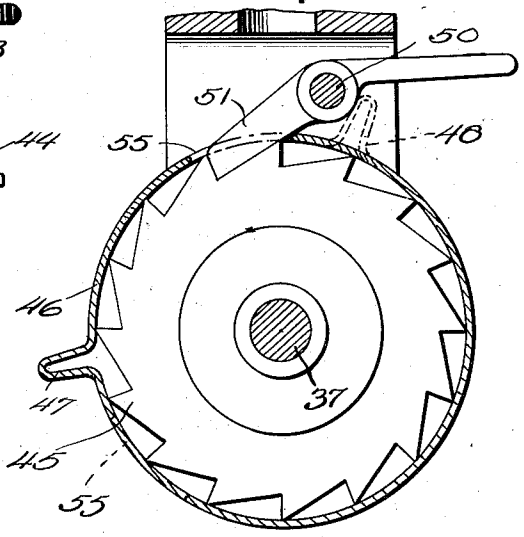

Inventor

W. H. Sauvage

By

Attorney

April 1, 1930. W. H. SAUVAGE 1,753,133

HAND BRAKE

Filed Feb. 9, 1925 2 Sheets-Sheet 2

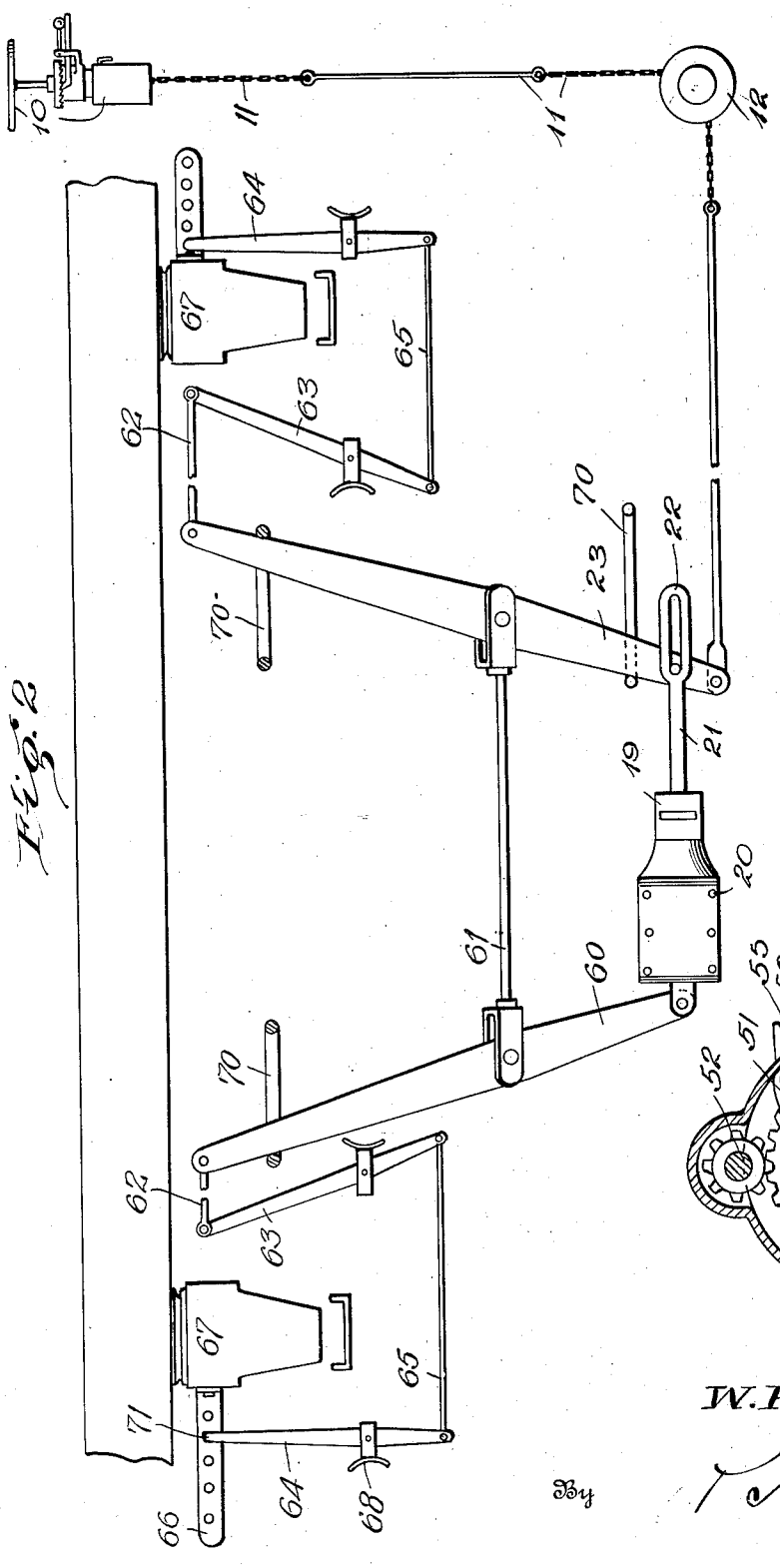

Fig. 2.

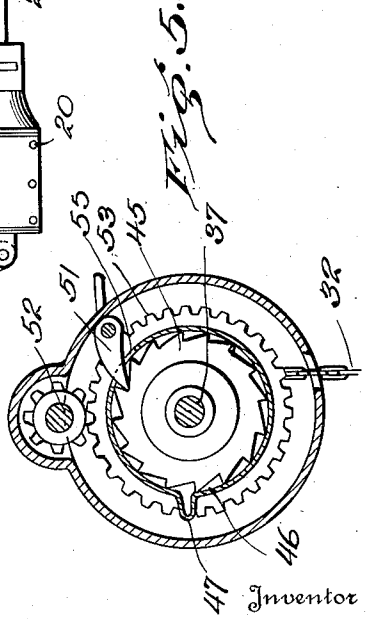

Fig. 5.

Inventor

W. H. Sauvage

By

Attorney

Patented Apr. 1, 1930 1,753,133

UNITED STATES PATENT OFFICE

WILLIAM H. SAUVAGE, OF NEW YORK, N. Y., ASSIGNOR, BY MESNE ASSIGNMENTS, TO ROYAL RAILWAY IMPROVEMENTS CORPORATION, OF NEW YORK, N. Y., A CORPORATION OF DELAWARE

HAND BRAKE

Application filed February 9, 1925. Serial No. 7,960.

This invention relates to improvements in railway brakes and more particularly to the foundation brake system and manually actuated mechanism as installed on railway cars. In other words, the invention resides in the peculiar combination and relation of the manually operated brake rigging and air brake mechanism now in general use.

One of the objects of the present invention is to provide an improved brake system for railway cars of simple and practical construction and one which may be manually operated and be as reliable and efficient in use and operation as the power brake.

A further object is to provide a system of the above general character which may be easily applied to the foundation brake rigging now in use without material modification.

A further object is to provide an improved manually operated brake rigging adapted to have uniform travel regardless of the wear of the brake shoes and associated parts.

A further object is to provide an improved brake rigging in which the manually operated unit will automatically compensate for excess travel of the rigging.

A further object is to provide a quick acting high powered manually operated brake particularly applicable for use in connection with the present combined air brake and hand brake systems now in general use.

Other objects will be in part obvious and in part hereinafter pointed out in connection with the accompanying sheets of drawings wherein is shown two of various possible embodiments of the system and a preferred form of the manually operated mechanism. In these drawings wherein similar parts are denoted by corresponding reference characters—

Figure 1 is a diagrammatic view showing sufficient parts of the complete system as to enable one to thoroughly understand the same.

Figure 2 is a similar view showing a modified system;

Figure 3 is a detail partial sectional view of the brake operating mechanism; and

Figures 4 and 5 are detail views of certain parts.

Referring now to the drawings in detail, and more particularly to Figure 1, there is shown the general hand brake arrangement 10, preferably attached to one end of a car of any desired type. This mechanism is provided with an actuating chain 11 passing around a sheave 12 thence back to the dead lever 13 of the foundation brake rigging. This lever 13 is connected through tie rod 14 to cylinder lever 15 which is, in turn, connected to the piston rod 16 actuated from the air cylinder 17. The levers 13 and 15 are connected through top rods 18 with the brake rigging on the trucks at the opposite ends of the car. This general mechanism is all of well known arrangement and needs no further detailed description. It will be noted, however, that in one respect the arrangement is the reverse of the usual combination. In other words as herein shown, the handbrake actuating mechanism is attached to one end of the dead or floating cylinder lever 13, the end of which lever is adapted to travel in the slotted guide 20 secured to the rear of the airbrake cylinder. Inasmuch as the lower end of the lever 13 is prevented from moving relatively towards the left as shown in Figure 1, due to the holding mechanism associated with the handbrake and later more fully described. This lower end of the lever 13 may be considered fixed when air power is applied. On the other hand, when the handbrake is applied, then the live and dead levers will move to substantially the position shown in the dotted lines. The hand actuating mechanism is of that type which will permit only a predetermined amount of chain to be unwound therefrom and since it is connected directly to the cylinder floating lever by the chain connection 11 a seven-inch return piston travel means the unwinding of seven inches of brake chain from drum 31, Figure 3, and when this seven inches of brake chain unwinds from the hand brake drum then the mechanically actuated part of the system will come into operation and the pawl will fall into a ratchet tooth automatically to give the desired automatic adjustment. The dead lever will, in turn, hold the cylinder lever to the same travel of seven

inches since the proportioning of the levers is the same. By the term "chain" as herein used and in the claims, it is, of course, to be interpreted broadly as denoting a flexible member as well as to include the connecting links, as shown, which with some types of cars are more desirable.

In Figure 2 the hand brake arrangement is substantially the same except that the cylinder 20 is reversed and works in harmony with the hand brake. In this case the slotted piston rod 21 is provided at its end with a slot 22 seven or eight inches in length to correspond with the normal piston travel. This push rod is fastened to a hollow piston by means of a clutch 19 freely operating in one way and locked against movement in the opposite direction, such, for example, as the use of a ratchet or dog construction. When the handbrake is applied by the operator, should the cylinder lever 23 which carries a pin cooperating with the slot 22 in the telescoping rod 21 exceed in movement the length of this slot 22, then the telescoping part 21 of the piston will be forcibly pulled out thru the holding mechanism 19 relatively towards the right to the same extent as the excess travel of the cylinder lever 23 over and above the length of the slot 22. Also the automatic stop in the handbrake mechanism shown in Figure 4 will on release prevent the drum 31 from unwinding more than a predetermined amount of chain equal to the length of the slot 22 thereby insuring or establishing proper brake shoe clearance and desired piston travel at the next application of the power brakes.

When the brake shoes need renewal, as in Figure 1, it is only necessary to drop the automatic holding pawl in the hand brake, thus permitting all of the chain to unwind and allow the parts to go to full release position. With the form shown in Figure 2, the holding clutch dog 19 is released and the telescoping part 21 of the piston forced inwardly to full released position. The new shoes are applied to the brake rigging and preliminary adjustment of the truck brake levers made if necessary. Then, on the first application of the hand brake, all of the excess travel of the entire foundation brake rigging is taken up, and simultaneously the telescoping piston rod is adjusted to proper relative position with respect to the piston in the cylinder so that on the first application of the power brakes, the air piston will move the desired seven inches. Of course, it is to be understood that in using the arbitrary distance of seven inches, this indicates the normal, standard piston travel of the car at rest. When the car is in motion, there is, due to looseness in the king-pins, journal boxes, etc., a slightly greater distance to be traversed before the brakes are effectively applied, being perhaps a total of eight inches or eight and a half inches.

This preliminary explanation of Figures 1 and 2 is for the purpose of showing the relationship between the hand brake mechanism and the cylinder lever system in order that the unique and novel relationship of these parts, due to their peculiar construction and arrangement, will be more apparent. The cylinder lever system diagrammatically illustrated in Figure 2 is an old, well known and conventional type with the exception of the hangers supporting and limiting the return movement of the cylinder levers themselves, the purpose of which will be hereinafter more fully pointed out.

Referring now to Figure 3 of the drawings, there is shown a casing 30 provided with a drum 31 upon which the chain 11 is adapted to be wound. A main actuating or hand wheel 33, drives shaft 34, provided with beveled gear 35, which, in turn, meshes with a second bevel gear 36 on the drum shaft 37. At the upper end of the shaft 34 is attached an inverted ratchet wheel 38 which rotates upon the upper neck 40 of the drum casing 30, and aids in holding the shaft in proper place and the bevel gears in mesh. Mounted upon the neck 40 is a loosely mounted collar 41 resting on lugs or ears 42, on the neck 40 for holding or supporting a pivotally mounted pawl 43 normally held in engagement with the ratchet by means of a pivotally mounted weight 44. This collar 41 may be turned or reversed and locked in any desired position by means of the lug 42 adapted to engage a recess in the collar 40.

Outside of the large bevel gear 36 is a special holding ratchet 45 which is attached to and moves with the gear at the same speed. The teeth of this ratchet are covered throughout the greater portion thereof by means of a thin spring steel protection covering 46, as shown more completely in Figure 4, which hugs the periphery of the teeth with sufficient friction to prevent ordinary relative movement yet slips relatively thereto when occasion demands as wear of the parts takes place. It will be noted that this covering or shield is provided with an ear 47, as shown in full lines in Figure 4, when the parts are in full released position, but moves to the dotted line position at 48 when the brake is applied. Should the ratchet continue to revolve in a counter-clockwise direction after the ear reaches the position 48 it strikes against the hub 50 of gravity actuated pawl 51 and is caused to slip relatively to the ratchet wheel 45 to an extent equal to that of the excess travel. The chain sheave 31 will, under these circumstances, take up more than the usual seven inches of slack chain, and on release of the brakes the pawl 51 is raised and will ride on the upper or outer surface of the shield unless it reaches the gap

55 in the uncovered portion whereupon it drops into engagement with the ratchet 45 and prevents further unwinding of the chain drum, until the pawl is manually moved out of engagement.

Figure 5 is similar to Figure 4, but a power multiplying device, such as gears 52—53, is employed, the gear 52 being on the brake staff.

While it is believed that the operation of this device is perfectly clear from the above description, a brief statement thereof is as follows.

Referring to Figures 1, 3 and 4, it will be noted that when the hand wheel 10 is rotated, the brake is applied and pressure maintained by reason of the pawl and ratchet mechanism 38—43. The chain 32 is wound upon the drum 31, and as the drum rotates, the sleeve 46 upon ratchet 45 will be turned to cause the pawl 51 to ride out of engagement with the ratchet and slide freely upon the outer periphery of the shield. When the lug 47 reaches the position 48, it is arrested by reason of its engagement with the pin 50, yet will not prevent further winding of the chain on the drum 31. On release of the brakes, the stop 48 moves in a counter-clockwise direction until the hole 55 comes opposite the pawl 51 whereupon the pawl drops into engagement with the teeth of ratchet 45 and prevents a further unwinding of the chain 32 from the drum 31, thereby positively insuring a uniform brake actuating movement of the hand brake rigging. When the brakes are next applied, it will only be necessary to give the drum approximately two-thirds of a turn in order to obtain full braking pressure.

If, due to wear of the parts, this two-thirds of a turn is insufficient to take up all of the excess travel, the sleeve 46 will automatically adjust itself by reason of the engagement of the stop 48 with pin 50 to a new position upon the ratchet, and in this manner, the brake rigging is automatically adjusted at all times.

Referring back to Figure 2, in order that the cooperation between the hand and power brakes may be more apparent, attention is directed to the fact that opposed to the cylinder lever 23 is the dead or floating cylinder lever 60 connected therewith by means of tie rods 61. These levers have their opposite ends connected to pull rods 62 extending in opposite directions and connected with the upper ends of the live truck levers 63. The lower ends of these levers are connected to the dead truck levers 64 by means of bottom tie rods 65. The upper ends of the dead levers are supported in adjustable hangers 66 which in the present case, as herein shown, are mounted on truck bolsters 67. Of course, the truck levers carry brake beams having shoes 68 adapted to coact with the the peripheries of the adjacent truck wheels. All of this mechanism, immediately above described, is of substantially standard construction differing slightly in different types of cars, but heretofore no one has apparently appreciated the importance of utilizing and accurately positioning the cylinder lever hangers 70 with relation to the truck brake rigging and piston travel. These hangers 70, which may be of the usual inverted, U-shaped bars depending from the under side of the car body or slots in the draft sills when an all metal car is equipped, are adapted to limit the adjusting movement of the truck brake levers and permit independent adjustment of each truck brake rigging without disturbing the relative angularity of either the cylinder or the truck brake levers at the opposite end of the car. For instance, as herein shown, when new brake shoes are applied to the brake beams of one truck and the levers adjusted to substantially desired position, the mechanic in charge merely removes the pin 71 and pulls the upper end of the dead truck lever 64 towards the adjacent end of the car as far as it will go. This brings the brake shoes into contact with the peripheries of the wheels or into applied position. Then by dropping back one hole on regulator 66, the brakes automatically release from engagement with the wheels and substantially the desired brake shoe clearance is obtained. This major adjusting movement, however, does not affect the remainder of the foundation gear, for the cylinder levers are snug against the end of their hangers 70, and the pulling movement exerted upon the upper ends of the dead levers 64 is stopepd at that point of engagement between the cylinder lever and its supporting hanger.

In this manner not only is the independent adjustment of each truck brake rigging permitted without seriously changing the angularity of any of the levers, but the piston travel (neither too short nor too long) and the hand brake travel is maintained more nearly constant. The subsequent finer adjustment for both of these mechanisms permitted by their associated parts may be then more easily and quickly established on first application of the brakes and maintained thereafter.

From the above, it will be apparent that if the normal hand brake travel of seven inches provided for by the slot 22 be exceeded, such movement will automatically adjust the piston travel by pulling out the telescoping part 21 of the piston past the holding means 19.

It will thus be seen that the hand brake mechanism above described is particularly applicable for use with the foundation brake rigging of cars of that type adapted to have semiautomatic adjustment to compensate for wear of the parts, and the brake mechanism

is provided with means for cooperating therewith to the desired end.

It is, of course, to be understood that the casing enclosing the operating mechanism may be of any desired type suitable for securing to cars of different construction and at the same time be simple and inexpensive to manufacture, yet strong and durable and provided with few parts not likely to get out of order.

I claim:

1. In a brake system, in combination with the foundation brake rigging, hand brake mechanism, means directly incorporated therein adapted to establish uniform piston travel when the air brakes are actuated, and means including a slotted connection permitting independent movement of the foundation brake rigging under hand power without actuating the air brake piston.

2. In a brake system for railway cars, in combination, a foundation brake rigging including an air brake cylinder, a slotted connection, a manually operated mechanism connected with the foundation brake mechanism through said slotted connection, permitting hand operation of the brakes without moving said piston, and means directly incorporated in said manually operated mechanism adapted to establish uniform piston travel and uniform travel of the manually operated brake mechanism.

3. A brake system including foundation brake rigging, an air brake cylinder, and manually operated hand brake means, a slotted connection permitting independent operation of the cylinder or handbrake as desired and means directly incorporated in said hand brake mechanism adapted to establish uniform piston travel or uniform actuation of the hand brake mechanism according to which is actuated.

4. A brake system including foundation brake rigging, an air brake cylinder and manually operated hand brake means, a slotted connection permitting independent operation of the cylinder or hand brake as desired and means directly incorporated in said hand brake mechanism adapted to establish uniform piston travel or uniform actuation of the hand brake mechanism, according to which is actuated, said means including a friction device adapted to be moved as wear of the parts occur.

5. A brake system including foundation brake rigging, an air brake cylinder and manually operated handbrake means, a slotted connection permitting independent operation of the cylinder or hand brake as desired and means associated with the hand brake mechanism adapted to establish uniform piston travel or uniform actuation of the hand brake mechanism, said means including a pawl and ratchet and a friction device associated therewith adapted to automatically change the point of actuation between the pawl and ratchet if excess travel occurs.

6. A manually operated hand brake including a drum about which a chain may be wound, a pawl and ratchet associated therewith, and means adapted to establish a predetermined amount of unwinding of the drum when the brakes are released in combination with a cylinder lever to which said chain is connected, and a cylinder and piston, said piston having a loose connection with said lever whereby the hand brake may be actuated without disturbing said piston.

7. A manually operated hand brake including a drum about which a chain may be wound, a pawl and ratchet associated therewith, means adapted to establish a predetermined amount of unwinding of the drum when the brakes are released and to permit an unlimited movement of winding up of the chain on application of the brakes in combination with a cylinder and piston, said piston having a slotted connection with said chain whereby the chain may be actuated to an extent equal to its unwinding movement without actuating said piston.

8. In a hand brake mechanism, in combination, a drum about which a chain is adapted to be wound in applying the brakes, take-up and holding means associated therewith, and means associated with said drum adapted to permit a limited unwinding of the drum on release of the brakes in combination with a cylinder and piston, said piston having a slotted connection with said chain whereby the chain may be actuated to an extent equal to its unwinding movement without actuating said piston, and a regulator adapted to be actuated when excess piston travel occurs for restoring the piston to normal travel for the next subsequent operation.

9. In a hand brake mechanism, in combination, a drum about which a chain is adapted to be wound in applying the brakes, take-up and holding means associated therewith, and means associated with said drum adapted to permit a limited unwinding of the drum on release of the brakes, and permitting unlimited winding of the chain about said drum on application of the brakes in combination with a cylinder having a telescoping piston, said piston having a lost motion connection with said chain whereby the hand brakes may be actuated a predetermined amount substantially equal to normal piston travel before movement of said piston, and means whereby excess travel of the hand brake mechanism will automatically set said piston to normal piston travel on the next subsequent operation of the air brake cylinder.

10. In a hand brake mechanism, in combination, a drum about which a chain is adapted to be wound, mechanism for holding the same in any desired adjusted position, and a

pawl and ratchet mechanism forming part of said hand brake mechanism for insuring uniform brake operation.

11. In a hand brake mechanism, in combination, a drum about which a chain is adapted to be wound, a pawl and ratchet mechanism for holding the same in any desired adjusted position and a second pawl and ratchet mechanism for insuring uniform brake operation and automatic take up of any excess travel which may occur in the brake rigging during the manual operation of the hand brake.

12. In a hand brake mechanism, in combination, a drum about which a chain is adapted to be wound, a pawl and ratchet mechanism for holding the same in any desired adjusted position, a second pawl and ratchet mechanism for insuring uniform brake operation and automatic take up of any excess travel which may occur in the brake rigging during the manual operation of the hand brake, said means including a shield substantially enclosing said ratchet and movable relatively thereto on excess travel.

13. In a foundation brake rigging, in combination, truck brake levers, cylinder levers, an airbrake cylinder connected with said levers, and hand brake mechanism connected with one of said cylinder levers, means directly incorporated in said hand brake for automatically establishing proper brake shoe clearance of the truck brake levers, and independent manually operable adjusting means associated with said truck brake levers for initially establishing proper brake shoe clearance.

14. In a foundation brake rigging, in combination, truck brake levers, cylinder levers, an airbrake cylinder connected with said levers, hand brake mechanism connected with one of said cylinder levers, means directly incorporated in said hand brake for automatically establishing proper brake shoe clearance of the truck brake levers, and manually operable adjusting means associated with said truck brake levers for initially establishing proper brake shoe clearance, said hand brake mechanism and air brake mechanism having a lost motion connection whereby the hand brake may be actuated without actuating the air brake piston.

15. In a foundation brake rigging, in combination, truck brake levers, cylinder levers, an airbrake cylinder connected with said levers, hand brake mechanism connected with one of said cylinder levers, means directly incorporated in said hand brake for automatically establishing proper brake shoe clearance of the truck brake levers, and manually operable adjusting means associated with said set of truck brake levers for initially establishing proper brake shoe clearance, said hand brake mechanism and air brake mechanism having a lost motion connection whereby the hand brake may be actuated without actuating the air brake piston, and means associated with one of said parts adapted to automatically adjust the piston to standard piston travel when the hand brakes are actuated.

16. In a foundation brake rigging, in combination, truck brake levers, cylinder levers, an airbrake cylinder connected with said levers, hand brake mechanism connected with one of said cylinder levers, means directly incorporated in said hand brake for automatically establishing proper brake shoe clearance of the truck brake levers, and manually operable adjusting means associated with said truck brake levers for initially establishing proper brake shoe clearance, said hand brake mechanism and air brake mechanism having a lost motion connection whereby the hand brake may be actuated without actuating the air brake piston, and means associated with the hand brake and the air brake cylinder adapted to maintain both of said parts in adjusted position whereby uniform hand brake or uniform piston travel is provided.

17. In a foundation brake rigging, in combination, truck brake levers, cylinder levers, an airbrake cylinder for actuating the same, supporting means for the cylinder levers, a combined hand brake and regulator connected with said cylinder levers for automatically and accurately establishing uniform piston travel and independent regulators associated with the brake levers of each truck for initially establishing proper brake shoe clearance.

18. In a hand brake mechanism, in combination, a drum about which a chain is adapted to be wound, mechanism for holding the same in any desired adjusted position, and a pawl and ratchet mechanism actuated by the hand brake for insuring uniform brake operation, said hand brake mechanism being connected with one of the levers of the foundation brake rigging actuated thereby, and means whereby said lever may be moved without moving the piston of the airbrake system.

19. In a hand brake mechanism, in combination, a drum about which a chain is adapted to be wound, a pawl and ratchet mechanism for holding the same in any desired adjusted position, a second pawl and ratchet mechanism actuated by the hand brake for insuring uniform brake operation and automatically take up any excess travel which may occur in the brake rigging, said hand brake mechanism being connected with one of the levers of the foundation brake rigging actuated thereby, whereby said lever may be moved without moving the piston of the airbrake system.

20. In combination with the foundation brake rigging of a railway vehicle having a brake lever, regulating means connected therewith near one end of said lever and

adapted to be operated when the end of said lever is manually actuated for changing the position of said parts with respect to the vehicle to re-establish desired brake shoe clearance, said regulator including a positive take up and holding means permitting a predetermined lost motion proportional to desired brake shoe clearance, said holding means adapted to be actuated if and when excess travel exists thereby permanently to absorb said excess travel in said permanent take up and holding means, truck brake rigging and independent means for regulating said truck brake rigging to approximately proper brake shoe clearance position, one of said regulating means including a pin and hole construction.

21. In combination with the foundation brake rigging of a railway vehicle having a movable cylinder lever adapted to be manually actuated to change its normal position of rest with respect to the car body when necessary to re-establish desired brake shoe clearance, a regulator associated therewith including a member connected to said lever near one end and adapted to limit its movement in one direction, lost motion means permitting free manual movement of said lever in the opposite direction a distance substantially proportional to desired brake shoe clearance when the brakes are being manually regulated, and permanent take up and holding means adapted to be actuated on excess manual movement of said lever beyond the distance provided for by said lost motion means thereby to change the relative position of said lever with respect to the car body and to re-establish proper brake shoe clearance.

22. In combination with the foundation brake rigging of a railway vehicle having truck and cylinder brake levers, a member connected near one end of one of said levers, manually actuated means for changing the position of said levers with respect to the vehicle to re-establish desired brake shoe clearance including positive take up and holding means providing lost motion after one lever has dropped back a distance proportional to desired brake shoe clearance, said holding means adapted to be actuated manually if and when excess travel exists thereby permanently to absorb said excess travel in said permanent take up and holding means, and means on each truck of the vehicle, each operable without disturbing the other for initially regulating the position of the truck brake levers to approximately proper position.

23. In combination with the foundation brake rigging of a railway vehicle having a brake cylinder lever, a member connected therewith near one end of said lever, manually actuated regulating means for changing the position of such lever with respect to the vehicle to re-establish desired brake shoe clearance including means permitting a lost motion proportional to desired brake shoe clearance, a positive take up and holding means operable after any excess distance above the lost motion has been traversed thereby permanently to absorb said excess travel only by said take up and holding means, truck brake rigging and independent means for regulating said truck brake rigging to approximately proper brake shoe clearance position, one of said regulating means including a pin and hole construction.

24. In combination with the foundation brake rigging of a railway vehicle having truck levers and cylinder levers, manually actuated regulating means positioned near one end of the car for changing the position of said levers with respect to the car, thereby to maintain desired brake shoe clearance and piston travel including positive take up and holding means and a lost motion device proportional to brake shoe clearance thereby to permit absorption of all excess travel when said regulator is actuated, and means connecting one of said cylinder levers and said regulating means independently of the truck brake rigging.

25. In combination with the foundation brake rigging of a railway vehicle having truck and cylinder brake levers, means connected to one of the cylinder levers and extending approximately to the end of the car, and manually actuated regulating means attached to said connecting means adapted to be manually actuated to take up and permanently hold all excess travel of the brake rigring, said regulating means being provided with pawl and ratchet mechanism for permanently taking up and holding any excess travel and a lost motion device for insuring proper brake shoe clearance.

26. In combination with the foundation brake rigging of a railway vehicle having truck and cylinder brake levers, means connected to one of the cylinder levers and extending approximately to the end of the car, and manually actuated regulating means attached to said connecting means adapted to be manually actuated to take up and permanently hold all excess travel of the brake rigging, said regulating means being provided with pawl and ratchet mechanism for permanently taking up and holding any excess travel and a lost motion device for insuring proper brake shoe clearance, said connecting means between the cylinder lever and the regulating means being independent of the truck brake levers.

27. In combination with the foundation brake rigging of a railway vehicle having truck and cylinder brake levers, means connected to one of the cylinder levers and extending approximately to the end of the car, manually actuated regulating means attached to said connecting means adapted to be

manually actuated to take up and permanently hold all excess travel of the brake rigging, said regulating means being provided with pawl and ratchet mechanism for permanently taking up and holding any excess travel and a lost motion device for insuring proper brake shoe clearance, and means associated with the truck brake levers for initially regulating the position of said levers to approximate proper brake shoe clearance.

28. In combination with the foundation brake rigging of a railway vehicle having truck brake levers and cylinder levers, a manually actuated regulator positioned at approximately one end of the car, and connecting means from said regulator to one of said cylinder levers.

29. In combination with the foundation brake rigging of a railway vehicle having truck brake levers and cylinder levers, a manually actuated regulator positioned at approximately one end of the car, and connected means from said regulator to one of said cylinder levers, said regulator including a pawl and ratchet mechanism and lost motion means associated therewith adapted to insure brake shoe clearance.

30. In combination with the brake rigging of a railway car including a pair of levers, manually actuated regulating means associated with said levers adapted to change their initial angularity, a cylinder lever, and a second manually operable regulating means near one end of the car and connected with said cylinder lever for more accurately regulating the entire brake mechanism.

31. In combination with the brake rigging of a railway car including a pair of levers, manually actuated regulating means associated with said levers adapted to change their initial angularity, a cylinder lever, and a second manually operable regulating means near one end of the car and connected with said cylinder lever for more accurately regulating the entire brake mechanism, said second means including a pawl and ratchet mechanism and a lost motion device for insuring brake shoe clearance.

Signed at New York city this 27th day of January, 1925.

WILLIAM H. SAUVAGE.