June 13, 1967 S. W. OPPENHUIZEN ETAL 3,325,233

FURNITURE CONSTRUCTION AND CONNECTIONS FOR PARTS THEREOF

Filed Sept. 30, 1965 4 Sheets-Sheet 1

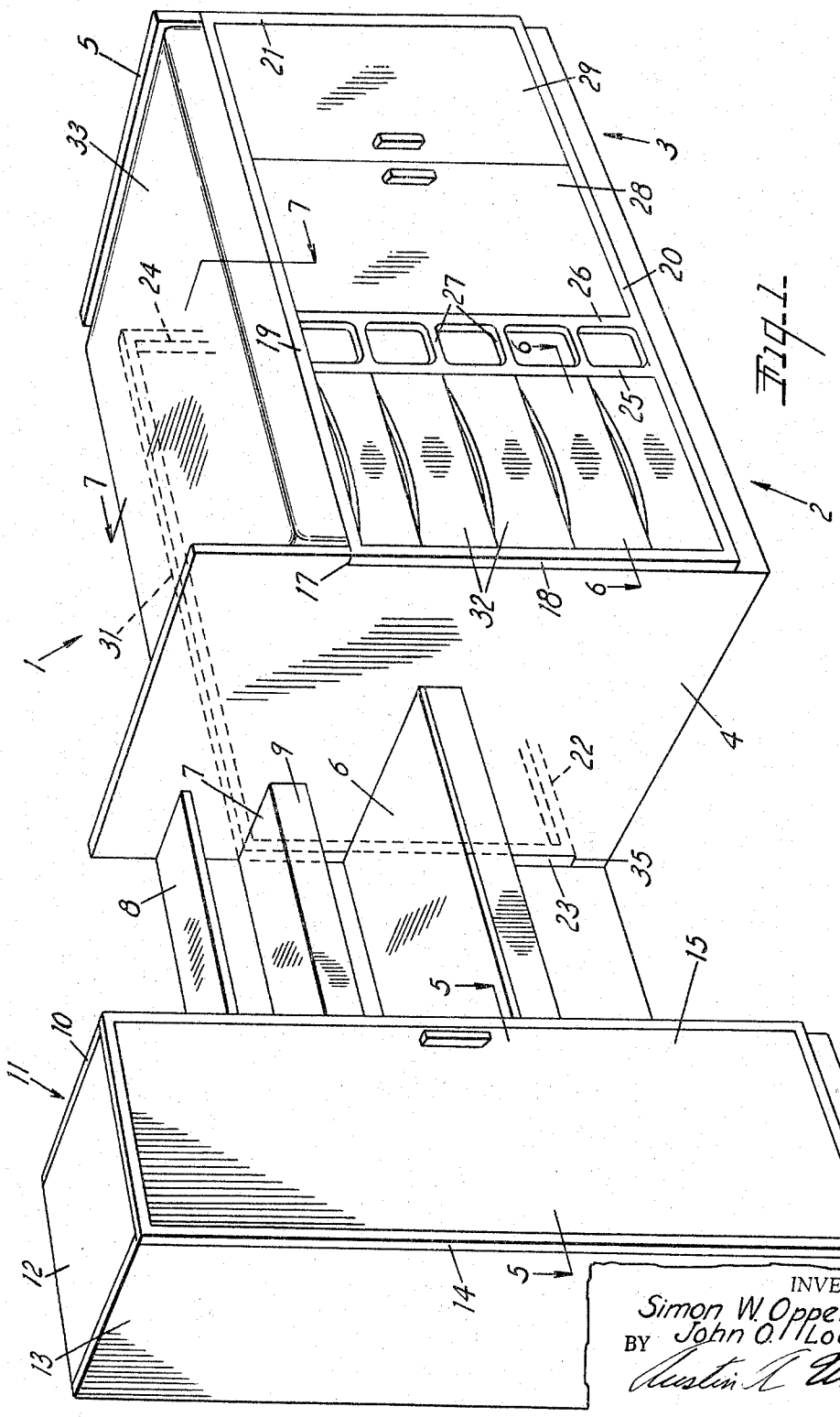

Fig. 1

INVENTOR.
Simon W. Oppenhuizen
BY John O. Lockwood
Austin R. Webb

ATTORNEY.

June 13, 1967 S. W. OPPENHUIZEN ETAL 3,325,233

FURNITURE CONSTRUCTION AND CONNECTIONS FOR PARTS THEREOF

Filed Sept. 30, 1965 4 Sheets-Sheet 2

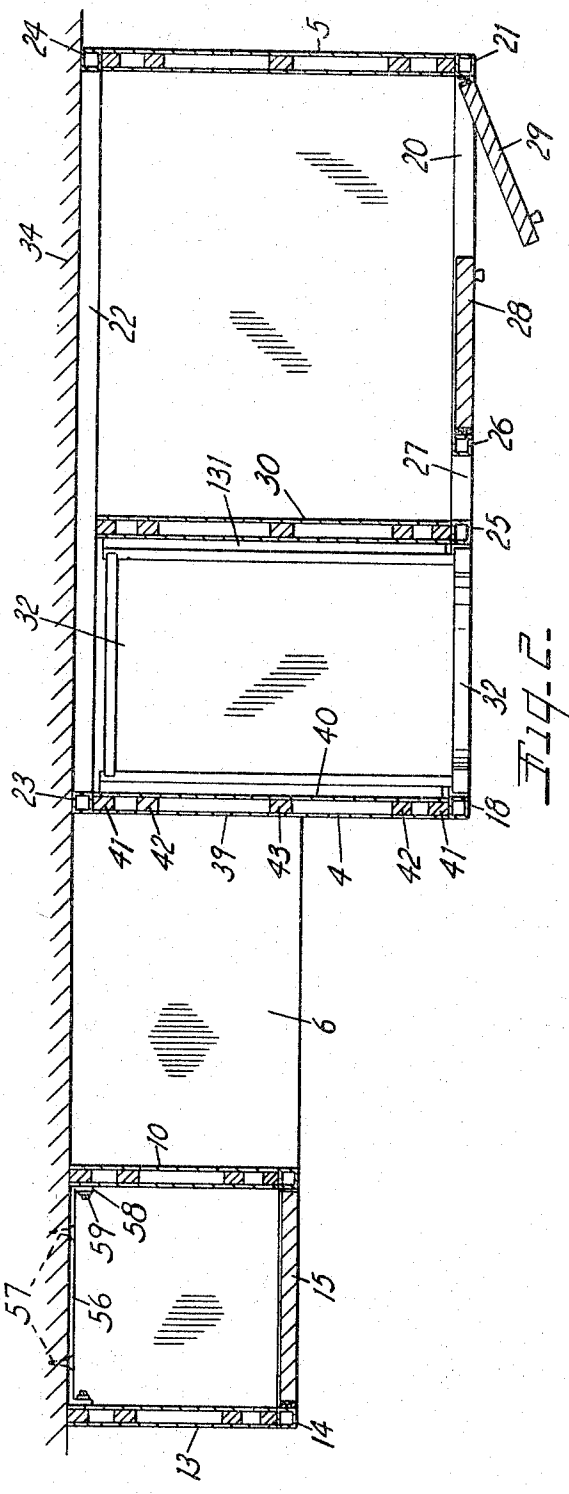

FIG. 2

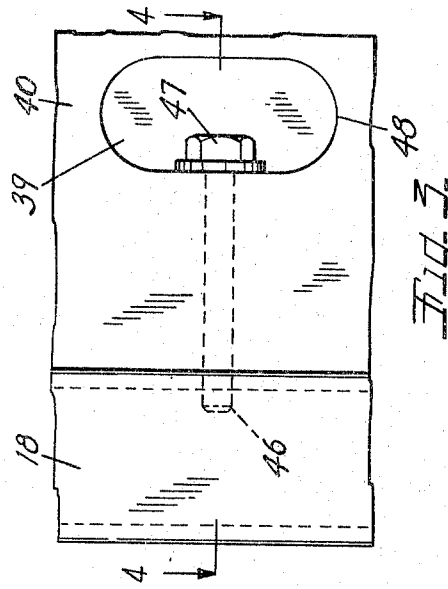

FIG. 3

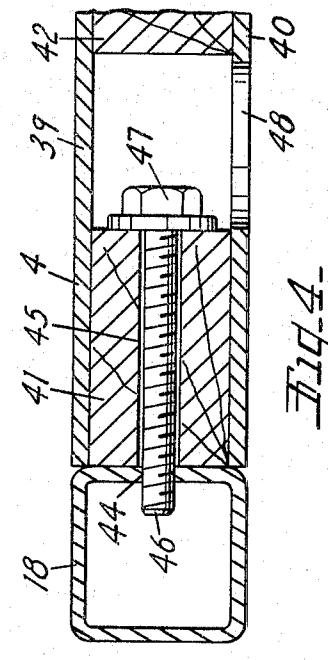

FIG. 4

INVENTOR.
Simon W. Oppenhuizen
BY John O. Lockwood
Austin A. Webb

ATTORNEY.

June 13, 1967 S. W. OPPENHUIZEN ETAL 3,325,233

FURNITURE CONSTRUCTION AND CONNECTIONS FOR PARTS THEREOF

Filed Sept. 30, 1965 4 Sheets-Sheet 3

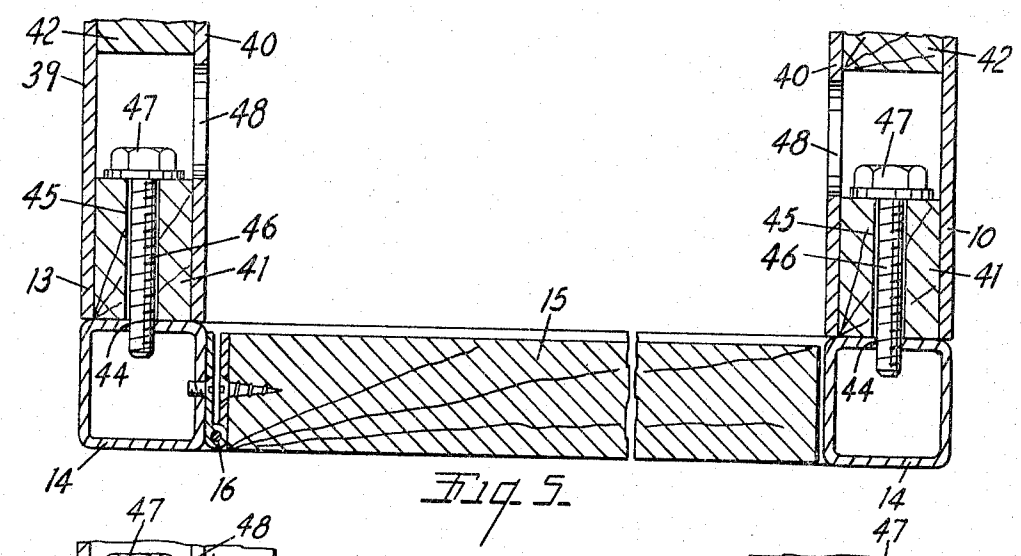

Fig. 5

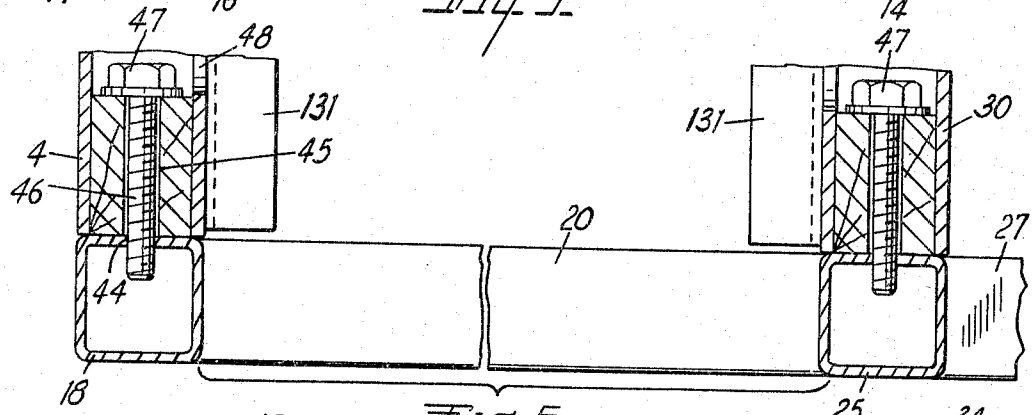

Fig. 6

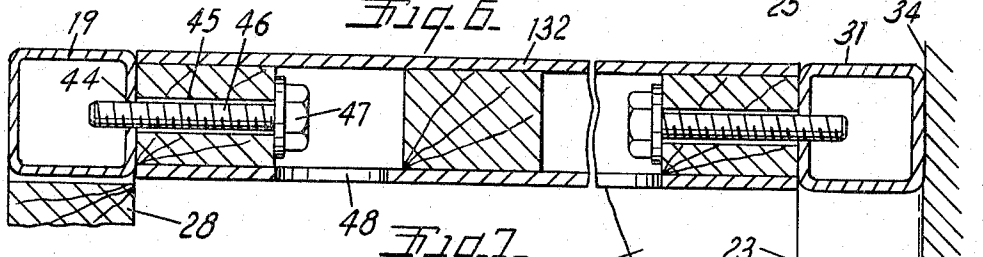

Fig. 7

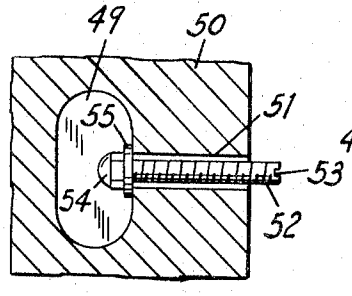

Fig. 8

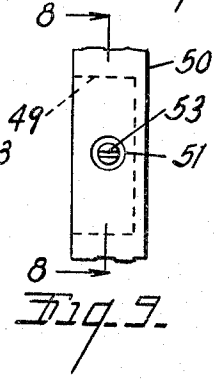

Fig. 9

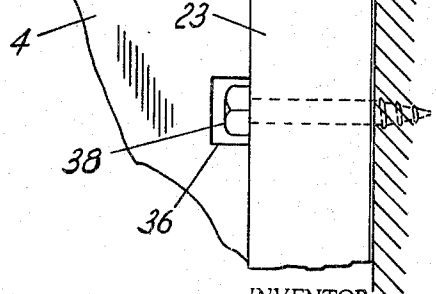

INVENTOR.
Simon W. Oppenhuizen
BY John O. Lockwood
Austin A. Webb

ATTORNEY.

June 13, 1967 S. W. OPPENHUIZEN ETAL 3,325,233

FURNITURE CONSTRUCTION AND CONNECTIONS FOR PARTS THEREOF

Filed Sept. 30, 1965 4 Sheets-Sheet 4

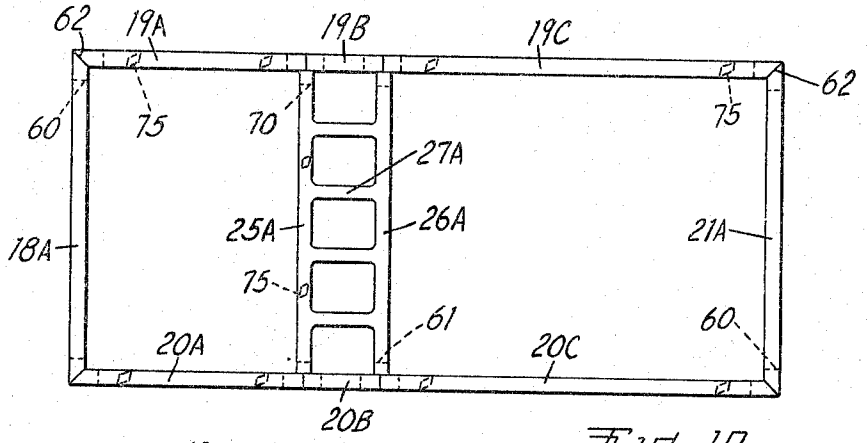

Fig. 10

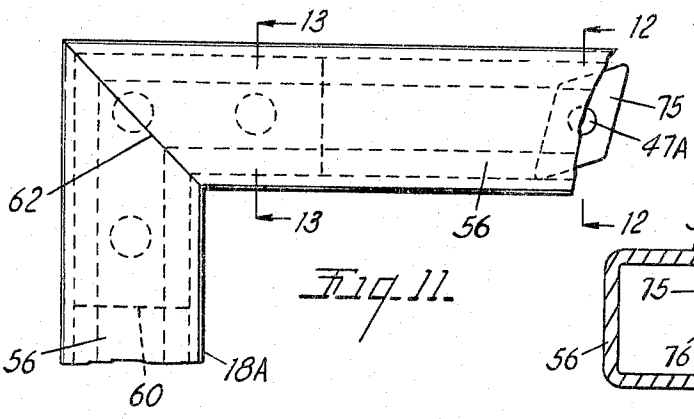

Fig. 11

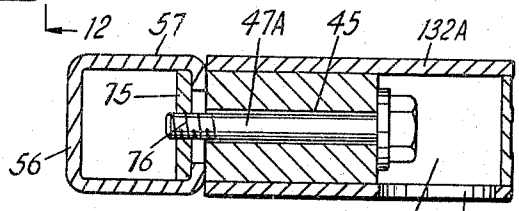

Fig. 12

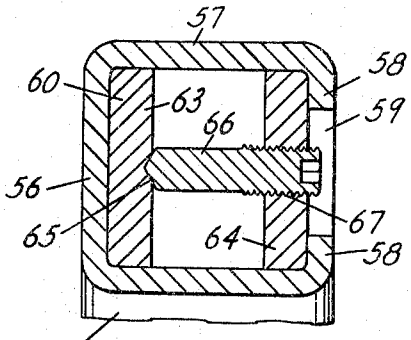

Fig. 13

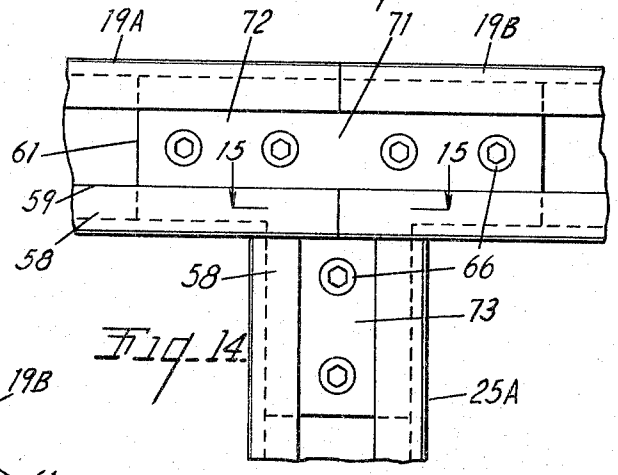

Fig. 14

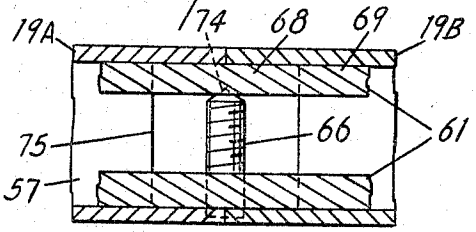

Fig. 15

INVENTOR.
Simon W. Oppenhuizen
John O. Lockwood
BY
Austin A. Webb
ATTORNEY.

United States Patent Office 3,325,233
Patented June 13, 1967

3,325,233

FURNITURE CONSTRUCTION AND CONNECTIONS FOR PARTS THEREOF

Simon W. Oppenhuizen and John O. Lockwood, Grand Rapids, Mich., assignors to Uniline Corporation, Holland, Mich.

Filed Sept. 30, 1965, Ser. No. 491,704
14 Claims. (Cl. 312—195)

This invention relates to improvements in furniture construction and connections for the parts thereof.

The principal objects of this invention are:

First, to provide a novel form of furniture construction which permits a variety of articles of furniture such as beds, cabinets and desks to be pre-cut and partially preassembled with flat structural supporting frames and panels and later assembled by means of concealed connections in which the connecting elements are preassembled and retained against loss during shipment and erection of the furniture.

Second, to provide a novel form of furniture construction particularly adapted for use in institutions such as school dormitories in which a bunk or bed is formed in elevated position or preshaped front and rear rectangular frames of tubular metal material with end panels connected to the sides of the frames by concealed connections and with drawers and closet space provided underneath the bunk or bed, the assembled bed further being connected by desk and shelf panels to a wardrobe cabinet, the cabinet having a front frame of tubular metal stock to which the door is prehinged and to which the top and side walls of the cabinet can be assembled by the concealed connections of the invention.

Third, to provide a novel form of connection between the edge of a panel and a metal frame member of hollow rectangular cross-section in which the edge of the panel has bolt or screw receiving openings extending into recesses opening to a concealed side of the panel, the openings and recesses having screws positioned therein to project into tapped holes in the frame member and the recesses being narrow enough to prevent the bolts or screws from falling out of the openings after the panels have been assembled.

Fourth, to provide a form of panel and frame construction as previously described in which the panels are of a laminated construction with inner and outer face laminations spaced by spacing materials including wood or other edge rails in which the holes are formed and inner spacing rails that prevent axial displacement of the screws from the holes in the edge rail, the inner surface lamination having openings formed therein permitting access to the head of the bolts or screws for making the connections between the panels and the frame member.

Fifth, to provide a modified form of panel to frame member connection in which a solid panel has recesses formed in a concealed side in spaced relation to an edge of the panel with screw receiving holes formed laterally through the edge of the panel to the recesses and with screws having a slotted outer end passed inwardly through the holes to cap nuts engaged with the inner ends of the screws so that the assembled screw and cap nut is retained against displacement and loss and is operative to be engaged with tapped holes in the side of a tubular metal frame member.

Sixth, to provide a novel form of furniture construction which can be precut and bored and drilled to be shipped in mainly flat sections and readily assembled in a building and if desired secured to the wall of the building to prevent movement of the assembled furniture and thus become a part of the building.

Seventh, to provide a knock down type of furniture

construction as described in which the vertical load supporting portion of the furniture consists of wooden panels which may be trimmed on the job to conform to irregularities in floor and wall construction of a building and in which the various sections of the furniture are rigidly connected by strong metal frame members having concealed connections to the panels.

Eighth, to provide a modified form of metallic frame adaptable for use in the above described furniture assembly which permits the frame to be made at least in part of straight rolled or folded stock, and assembled by a novel form of connection between the ends of the metal sections.

Ninth, to provide a modified metal frame to panel connection in which a bolt headed screw, loosely but nonremovably retained in the edge of a panel, may be engaged with the side of a hollow metal bar with a slot along one side, at any point along the slot, with the edge of the panel closing the slot and the connecting bolt concealed by one side of the panel and the bar.

Other objects and advantages of the invention will be apparent from a consideration of the following description and claims. The drawings of which there are four sheets illustrate one form of furniture assembly and two alternative types of connections between the panels and the frame members of the assembly.

FIGURE 1 is a fragmentary perspective view of a furniture assembly adapted for school dormitory use to provide a bed, drawer and cabinet storage space and a desk and shelves and a small closet, the assembly being connected by the concealed connections of the invention.

FIGURE 2 is a horizontal cross-sectional view through the bed and closet assembly just above the plane of the desk.

FIGURE 3 is a fragmentary enlarged inside elevational view showing the concealed connection between one of the panels of the furniture assembly and the adjacent metallic frame member.

FIGURE 4 is a fragmentary cross-sectional view taken along the plane of the line 4—4 in FIGURE 3.

FIGURE 5 is an enlarged fragmentary horizontal cross-sectional view through the front of the closet taken along the plane of line 5—5 in FIGURE 1.

FIGURE 6 is an enlarged fragmentary horizontal cross-sectional view through the front of the drawer section and front supporting frame.

FIGURE 7 is a fragmentary transverse vertical cross-sectional view taken along the plane of the broken line 7—7 in FIGURE 1 illustrating the bed support connections to the metal frame members and the alternative connection of the rear frame member to the adjacent wall of the building.

FIGURE 8 is a fragmentary cross-sectional view through a modified form of panel and screw connection adapted to be in place of the panel to frame connections shown in the other figures, the view being taken along the plane of the line 8—8 in FIGURE 9.

FIGURE 9 is a fragmentary edge elevational view of the modified panel and screw assembly shown in FIGURE 8.

FIGURE 10 is a front elevational view of a modified metal frame usable in the assembly of the other figures.

FIGURE 11 is a fragmentary, enlarged elevational view of a corner of the frame in FIGURE 10.

FIGURE 12 is a fragmentary cross-sectional view taken along the plane of the line 12—12 in FIGURE 11 showing a connection between a panel and the modified frame.

FIGURE 13 is a cross-sectional view taken along the plane of the line 13—13 in FIGURE 11 showing the connection between two parts of the frame.

FIGURE 14 is an enlarged fragmentary rear elevational view of the connection between angularly meeting and abutting parts of the frame in FIGURE 10.

FIGURE 15 is a fragmentary cross sectional view taken along the plane of the line 15—15 in FIGURE 14.

The furniture assembly of the invention can be shaped and assembled in a variety of arrangements and sizes and it will be understood that the structural illustration in the drawings is an example only of the many arrangements that are possible. The assembly consists of a bed or bunk generally indicated at **1** positioned in elevated relation over storage space which may consist of a series of slide-out drawers generally indicated at **2** and a hangar or open storage space generally indicated at **3**. The bed section is supported directly by a headboard panel **4** and foot board panel **5** and the headboard panel serves as a support for one end of a desk panel **6**, shelf **7** and top shelf **8**. The first shelf **7** may have a light shield panel **9** behind which a lamp, not illustrated, may be mounted. The other ends of the panels **6**, **7** and **8** are connected to and supported by one side panel **10** of a closet or cabinet generally indicated at **11**. The cabinet includes the previously mentioned side panel **10**, a top panel **12** and opposite side panel **13** which may be assembled by conventional furniture construction such as interior clips or brackets not illustrated. The side panels **10** and **13** are connected at their front edges to a rectangular frame member **14** of tubular metal having a rectangular cross-section and to which a door **15** is preconnected as by means of hinges indicated conventionally at **16**.

Considering the bed, drawer and storage sections of the assembly in greater detail it is pointed out that the head panel **4** is notched rearwardly in its front edge as at **17** to receive the corner of a rectangular metal frame having an upright **18**, top cross member **19**, bottom cross member **20** and opposite upright **21**. The frame member is formed of tubular metal stock having rectangular cross-section of about the same thickness as the thickness of the panels **4** and **5**. A similar rear frame member of rectangular shape is shown in part in FIGURE 2 where there is illustrated the lower cross member **22**, left upright **23** and right or foot upright **24**. The front frame member is desirably provided with intermediate uprights **25** and **26** with cross rungs **27** forming the steps of a ladder to the bunk or bed and also providing ventilation to the storage space **3**. The storage space is closed by doors **28** and **29** which are hinged to the uprights **26** and **21**, respectively. An intermediate panel **30** has its front edge connected to the intermediate upright **25** and its rear corners connected to the top cross-member **31** of the rear frame. The opposed inner surfaces of the head panel **4** and intermediate panel **30** support angled slideway members **131** for supporting the drawers **32** of the drawer section **2**.

Secured between the top cross-member **19** of the front metal frame and the top cross-member **31** of the rear metal frame is a bunk or bed support panel **32** which is connected in edge to edge relation with the sides of the frame members as is best illustrated in FIGURE 7. The panel **32** supports a mattress or other bunk or bed padding shown conventionally at **33** in FIGURE 1. As appears most clearly in FIGURE 7 the uprights **23** and **24** of the rear metal frame member may be permanently secured to the wall **34** prior to connection of the other members of the assembly thereto. The rear vertical edge of the head panel **4** is notched as at **35** in FIGURE 1 to receive the upright **23** and the foot panel **5** is similarly notched so that the panels fit in edge to edge relation with the sides of the metal frame members. The concealed inner surfaces of the end panels **4** and **5** are notched as at **36** in FIGURE 7 to clear the heads of lag screws **38** securing the rear frame member to the wall.

The panel members **4**, **5**, **30**, **10** and **13** may all be precut and sized to cooperate with the frame members of the bed and closet and the connections between the panels and the frame members are accurately located by

the construction shown in detail in FIGURES 3 and 4. The panel which may be the head panel **4** is of a laminated construction having an outer ply **39** of hard decorative composition board and an inner ply **40** of similar material. The plies **39** and **40** are spaced by edge rails **41** of wood and first interior rails **42** also of wood. Other interior rails **43** and spacing materials that are common in laminated panel construction may be provided as desired. The upright **18** of the tubular metal frame is provided with a tapped hole **44** in its edge and the edge rail **41** is provided with a laterally drilled hole or bore **45** positioned to register with the hole **44**. A screw bolt **46** having a head **47** is placed through the bore **45** prior to assembly of the first interior spacing rail **42** in the laminated panel and prior to adding the inner lamination **40** to the panel assembly. The spacing between the opposed edges of the edge rail **41** and interior rail **42** is such that the screw **46** cannot fall out of the bore **45** after the panel is assembled. The inner surface ply **40** is provided with an opening **48** opposite each screw **46** and its head **47** so that the screw can be engaged and drawn tight in the tapped holes provided in the metal frame members when the parts are assembled. This same panel to metal frame connection connects the frame **14** of the closet to the closet panels **13** and **10** and the bed support panel **32** to the cross-members **19** and **31** of the front and rear frames.

The same type of screw bolt connection between the edges of a solid wood panel and the side of a metal frame can be achieved as shown in FIGURES 8 and 9 by routing out a recess **49** in the side of a panel **50** and drilling a bore **51** edgewise through the panel into the recess. A screw element **52** having a cross-slot **53** in its outer end is passed into the recess **49** and turned tightly into a cap nut **54** with a washer **55** positioned around the screw between the cap nut and the side of the recess. After thus being assembled the combined screw **52** and cap nut **54** cannot be lost from the panel during shipment or handling and can be assembled into a frame and panel assembly in the same manner as the screw bolts **46** and **47**.

The door **15** of the closet and the doors **28** and **29** of the storage space may be preassembled on their supporting frames **14** and **21**, **26** and practically the entire furniture assembly can be shipped flat in a minimum of space and accurately and rigidly assembled in the place of use with a minimum of effort and without possibility of loss of the essential connecting screw elements. As previously noted the concealed connection between the panel elements and the hollow tubular frame elements is adapted to be used in a wide variety of furniture assemblies.

The side panels **10** and **13** of the closet may be anchored to the wall at their rear edges by U-shaped brackets **56** shown in FIG. 2. The brackets may be secured to the wall by screws **57** and their end arms **58** then secured by screws **59** to the panels. This connection cooperates with the fastening screws **38** in anchoring the assembly and making it part of the building.

The modified frame shown in FIGURE 10 may be subtituted for the front frame of the bed or bunk section **2** in FIGURE 1. It has an upright **18A**, sectional top cross member **19A**, **19B** and **19C**, sectional bottom cross member **20A**, **20B** and **20C**, and a right upright **21A**. Intermediate uprights **25A** and **26A** and the ladder rungs **27A** are shown as being integral but may be separate sections if desired. The sections of the frame are of generally rectangular cross section with front walls **56**, side walls **57** and inturned flanges **58** on the rear edges of the side walls, thus forming a hollow, generally tubular member with a slot **59** along the back.

The sections of frame are rigidly connected by corner connectors **60** and T connectors **61**. It is apparent that the T connector may be converted to a straight or end to end connector by omitting the leg of the T. At the corners of the frame, the frame sections as **18A** and **19A**

are mitered as at **62** and the bevelled ends are abutted. Front or inner connector plates **63** are sized and fitted snugly into the hollow cross sections of the ends, as are rear or outer connector plates **64**. The plates **63** and **64** are of flat right angular shape and hold the frame sections in right angular relationship. The front plates have locating recesses or detents **65** which receive the conical ends of spreader screws **66** and the rear or outer plates have opposed threaded openings **67** threadedly engaged with the screws. Tightening the screws, which are desirably socket headed, forms a tight and rigid corner in the frame and holds the mitered edges **62** square and flush. The engagement of the inner ends of the screws in the recesses **65** draws the plates, and in turn the frame sections into true parallelism, and the right angles of the plates holds the ends of the bars together.

The T connectors **61** are similar, consisting of front or inner plates **68** (see FIGURES 14 and 15) having cross arms **68** that extend into the ends of the end abutted frame sections as **19A** and **19B**, and legs **70** projecting into the angle abutted section **25A**. Opposed rear or outer plates **71** with side arms **72** and legs **73**. The inner plates **68** have locating detents **74** receiving the ends of screws **66** that are threaded through tapped holes in the outer plates. The side walls **57** of the straight abutted sections **19A** and **19B** are cut away as at **75** to make room for the legs **70** and **73** of the connector plates. In the T connection, the camming engagement of the tapered ends of the screws with the detents **74** draws the frame member **25A** up into tight abutment with the sides of the frame sections **19A** and **19B**.

The panels of the furniture assembly such as **132A** in FIGURE 12 are provided with headed bolts **47A** that are passed through bores in the edge of the panel with their heads retained in recesses **49** and accessible through openings **48** on the concealed inner sides of the panel as in the first form of the furniture assembly. Instead of engaging tapped holes in the metallic frame members, the bolts **47A** are provided with rhomboid shaped nuts **75**. The nuts are narrow enough to pass through the slots **59** in the frame at any point along the slots. Desirably, but not necessarily, the threads **76** of the bolts may be slightly deformed to initially hold the nuts on the bolts against loss, and to permit alignment of the narrow sides of the nuts with the slots **59**. Once inserted into the hollow section of the frame members, the elongated points **77** of the rhomboid shaped nuts engage the insides of the frame section when the heads of the bolts are turned. The temporary jambing of the nut is broken and the bolt draws the nut tight against the insides of the flanges **58** and clamps the edge of the panel against the back side of the frame member. When vertical loads are applied between the panel and the frame member, the engagement between the frame member and the lower corner of the nut supports the bolt and the panel, as well as the frictional grip between the edge of the panel and the side of the frame member.

What is claimed as new is:

1. A furniture assembly comprising a front frame of rectangular outline and tubular metal cross section,
- end panels of laminated construction with inner and outer plies and having their front edges abutted against the rear side of said frame,
- edge and interior spacer rails secured between said plies,
- recesses formed in concealed inner sides of said panels by openings formed in said inner plies between said edge and interior rails,
- holes bored edgewise in said panels into said recesses,
- and screws passed through said holes and threadedly engaged in tapped holes provided therefor in the rear side of said frame and having heads accessible through said recesses on the inner side of said assembly in clamping relation to the outer sides of said recesses,

the transverse width of said recesses being less than the length of said screws whereby said screws cannot be withdrawn from said holes in said panels through said recesses.

2. A furniture assembly as defined in claim **1** in which said screws have integral heads and are assembled into said panels before the assembly of said interior spacer rails and one of said surface plies to the remainer of the panels.

3. A furniture assembly as defined in claim **1** in which there are opposed front and rear frame members,
- and a top panel member engaged between the tops of said frame members,
- said top panel and said end panels being abutted against edges of said frame members.

4. A furniture assembly as defined in claim **3** in which said end panels project below said frame members,
- and said end panels are notched to receive said front frame member flush with the upper portions of the panel members,
- and said end panels are notched at the top and bottom to have their upper and lower portions flush with the back of said back frame member.

5. A furniture assembly as defined in claim **3** in which said front frame member has an intermediate upright,
- an intermediate panel having its front edge connected to the back of said intermediate upright,
- drawer supports secured to the inside of one end panel and the opposed side of said intermediate panel,
- and drawers slidably mounted on said drawer supports.

6. A furniture assembly as defined in claim **5** in which there are two spaced intermediate uprights with ladder-like rungs therebtween,
- and doors positioned below the top of said front frame member and hinged to opposed edges of one intermediate upright and one end of said front frame member.

7. A furniture assembly as defined in claim **6** in which said panels are approximately equal in thickness to the width of the cross section of said frame members.

8. A furniture assembly as defined in claim **3** in which one of said end panels has desk and shelf panels secured at one end to its outer side,
- a closet having top and side panels,
- another rectangular frame member to which the edges of said top and side panels are secured by fastening like those to said front and back frame members,
- said shelf and desk panels having their other ends connected to one of the side panels of said closet,
- and a door hinged to said other frame member to swing to closed position within said other frame member.

9. A furniture assembly as defined in claim **7** in which one of said end panels has desk and shelf panels secured at one end to its outer side,
- a closet having top and side panels,
- another rectangular frame member to which the edges of said top and side panels are secured by fastening like those to said front and back frame members,
- said shelf and desk panels having their other ends connected to one of the side panels of said closet,
- and a door hinged to said other frame member to swing to closed position within said other frame member.

10. A furniture assembly comprising front and rear frame members of generally rectangular cross section and rectangular outline,
- upright panels abutted edgewise between opposed portions of said frame members and projecting below the bottoms of the frame members,
- holes formed edgewise in said panels in opposed relation to said frame members,
- recesses formed in the inner sides of said panels and opening to the holes in the panels,
- and fastening means including screw members extending through said holes,

said fastening means having means on their outer ends clampingly engageable with the sides of the frame members and means on their inner ends clampingly engageable with the sides of said recesses around said holes,

said screw means being accessible and adjustable through said recesses.

11. A furniture assembly as defined in claim **10** in which one upright panel projects a relatively large distance above said frame members as a headboard and an opposed upright panel projects a lesser distance above said frame members as a foot board,

and a horizontal mattress support panel secured between horizontal portions of said frame members between said upright panels.

12. A furniture assembly as defined in claim **11** in which upright portions of one of said frame members has doors hinged thereto in closing relation to space below said mattress support panel.

13. A furniture assembly comprising a rectangular frame made up of separate sections connected together at the corners of the frame,

said sections having a cross section with connected front, and opposite side walls and inturned flanges on the edges of the side walls defining a slot,

connectors between the sections of said frame consisting of inner and outer angled plates received in said cross sections,

screws threaded through said outer plates and accessible through said slots and bearing against the rear sides of said inner plates,

a panel of approximately the same thickness as the side

of said frame sections having the slot therein abutted edgewise over the slot in one of said sections.

said panel having recesses formed in one side thereof adjacent to but spaced from the edge of the panel abutted against said section and holes extending from the edge of the panel to said recesses,

and clamping means including screw members extending through said holes and clamping said panel to said section,

said clamping means including a nut on said screw member engaged behind said inturned flanges and a head on the screw member engaged with the surface of said recess.

14. A furniture assembly as in claim **13** in which said screws have convex inner ends and said outer connector plates have locating recesses coacting with said convex ends,

and in which said nuts have a rhomboid shape with a major diagonal longer than the space between the top and bottom sides of said cross section of said frame sections.

References Cited

UNITED STATES PATENTS

2,709,634	5/1955	Blashfield	312—111
2,967,747	1/1961	Bus	312—257
2,980,482	4/1961	Baio	312—257
3,053,355	9/1962	Attwood	287—189.36
3,224,823	12/1965	Schulze	312—108

CHANCELLOR E. HARRIS, *Primary Examiner.*